City Council Meeting

Agenda

680 Park Avenue
Idaho Falls, ID 83402

Thursday, February 24, 2022 | **7:30 PM** | **City Council Chambers**

While Coronavirus (COVID-19) is still a public health risk, the City will follow Eastern Idaho Public Health (EIPH) recommendations. EIPH currently recommends observance of The Centers for Disease Control and Prevention (CDC) guidelines.

Welcome to the Idaho Falls City Council Meeting.

City Council Meetings are open to any member of the public. All are welcome to observe (either in person or via the City's website livestream). Note that not all agenda items include the opportunity for public comment. Also, please be aware that amendments to this agenda may be made by Council during the meeting upon passage of a motion that states a good faith reason why the desired change was not included in the original agenda posting. To participate personally, we ask you to follow these City guidelines.

Public Hearing Participation Guidelines.

1. In-person Comment. Because public hearings must follow various procedures required by law, please wait to offer your comments until comment is invited/indicated. Please address your comments directly to the Council and try to limit them to three (3) minutes.

2. Written Comment. The public may provide written comments via postal mail sent to City Hall or via email sent to the City Clerk at IFClerk@idahofalls.gov. Comments will be distributed to the members of the Council and become a part of the official public hearing record. Written testimony must be received no later than forty-eight (48) hours prior to the date of the hearing to ensure inclusion in the permanent City record.

3. Remote Comment. When available, the public may provide live testimony remotely via the WebEx meeting platform using a phone or a computer. Those desiring public hearing access should send a valid and accurate email address to VirtualAttend@idahofalls.gov no later than forty-eight (48) hours prior to the date of the hearing so log-in information can be sent to you prior to the meeting. Please indicate for which public hearing on the agenda you wish to offer testimony. Please note that the remote option will not be available for all meetings.

Regularly scheduled Council meetings are live-streamed and archived on the City website (idahofalls.gov). If communication aids, services, or other physical accommodations are needed to facilitate participation or access for this meeting, please contact City Clerk Kathy Hampton at 208-612-8414 or ADA Coordinator Lisa Farris at 208-612-8323 not less than 48 hours prior to the meeting. They can help accommodate special needs.

1. Call to Order.

2. Pledge of Allegiance.

3. Public Comment.

4. Consent Agenda.

Any item may be removed from the Consent Agenda at the request of any member of the Council for separate consideration.

A. Idaho Falls Power

1) Resolution Amending the Idaho Falls Power Service Policy **21-410**

Idaho Falls Power staff and board members review and discuss the utility's Service Policy annually to make any necessary additions, modifications, or updates to ensure the document remains a useful and relevant tool for customers.

Attachments: 2022 Service Policy Resolution combined.pdf

2) Quote 837864 Altec Overhead Cable Puller **21-409**

This purchase will aid crews in pulling new overhead wire to poles.

Attachments: Altec Quote 837864 - 4 drum cable puller.pdf

3) Idaho Falls Power Board Meeting Minutes - January 2022 **21-405**

The Idaho Open Meeting Law requires that the governing body of a public agency must provide for the taking of written minutes of all its meetings.

Attachments: 2022 0127 IFP Board Meeting minutes f.pdf

B. Public Works

1) Bid Award - Hemmert Avenue Railroad Crossing **21-412**

On Tuesday, February 15, 2022, bids were received and opened for the Hemmert Avenue Railroad Crossing project. A tabulation of bid results is attached. The purpose of the proposed bid award is to construct roadway and sidewalk improvements on Hemmert Avenue near the existing railroad crossing. The work is required to coordinate installation of new railroad planking, signals and gates that will be completed as a separate Federal Aid project.

Attachments: TRF-2020-04 Bid Tab.pdf

2) Bid Award - North Highland Park Concrete Improvements **21-414**

On Tuesday, February 15, 2022, bids were received and opened for the North Highland Park Concrete Improvements project. A tabulation of bid results is attached. The purpose of the proposed bid award is to construct sidewalk and storm drainage improvements along Canyon Avenue in Highland Park.

Attachments: STR-2021-16 Bid Tab.pdf

C. Municipal Services

1) Minutes from Council Meetings **21-424**

February 7, 2022 City Council Work Session and February 10, 2022 City Council Meeting

Attachments: 20220207 Work Session - Unapproved.pdf
20220210 Council Meeting - Unapproved.pdf

2) License Applications, all carrying the required approvals

Recommended Action:

Approve, accept, or receive all items on the Consent Agenda according to the recommendations presented (or take other action deemed appropriate).

5. Regular Agenda.

A. Idaho Falls Power

1) Resolution for the proposed Yellowstone Peak Generation Plant and Clean Energy Research Park **21-411**

Idaho Falls Power (IFP), in cooperation with Heber Light and Power and Lehi City Power, will explore potential construction of the Yellowstone Peak Generation Plant and Clean Energy Research Park. The generation plant shall consist of up to 35 megawatts of peaking generation and associated clean energy research facilities including, hydrogen, biofuels and similar non-carbon emitting emerging technologies.

IFP provides safe, reliable, and affordable electric service to city residents. As demand for energy has increased rapidly, so has the need for peak-hour generation as identified in the IFP Strategic Plan. IFP is working to secure affordable, reliable, and environmentally responsible energy resources sufficient to meet the needs of the community.

Recommended Action:

Approve the resolution supporting the proposed Yellowstone Peak Generation Plant and Clean Energy Research Park and give authorization for the Mayor and City Clerk to execute the necessary documents (or take other action deemed appropriate).

Attachments: CLEAN 2022-2-16 Peaking Resolution rev1.pdf

B. Community Development Services

1) Resolution approving the Eligibility Report for the Pancheri East Bank Urban Renewal District **21-421**

Attached is a resolution approving the Eligibility Report for the Pancheri East Bank Urban Renewal District. This is the first step required by Idaho Statute in creating a new urban renewal district. The report reviews the criteria for establishing a district and determines which of the criteria are met for the site. The statute requires that only one of the criteria be met. If the Council approves the report, the Idaho Falls Redevelopment Agency (IFRA) will then be authorized to draft an urban renewal district plan, which will also come back for Council approval. The IFRA board reviewed this report on February 17th and approved the document. It is now being presented for Council approval.

Recommended Action:

Approve the Resolution approving the Eligibility Report for the Pancheri East Bank Urban Renewal District and give authorization for the Mayor and City Clerk to execute the necessary documents (or take other action deemed appropriate).

Attachments: Pancheri East Bank Eligibility Study 2-17-22 v2.docx
Resolution - Urban Renewal Plan Update 2.17.22.docx

2) Ordinance to change the name of Serenity Lane to Charity Lane. **21-397**

Attached is an ordinance changing the street name of Serenity Lane to Charity Lane. This change is

requested following a notice received that the street was similar to an existing street in Bonneville County after the plat for subdivision had already been recorded. There are no buildings on Serenity Lane so no property owners are affected by the change.

Recommended Action:

To approve the Ordinance changing the name of Serenity Lane to Charity Lane under a suspension of the rules requiring three complete and separate readings and request that it be read by title and published by summary (or consider the Ordinance on the first reading and that it be read by title, reject the Ordinance, or take other action deemed appropriate).

Attachments: Ordinance

3) Public Hearing-Part 1 of 2 of the Annexation and Initial Zoning-Annexation Ordinance and Reasoned Statement of Relevant Criteria and Standards for 55.033 acres, Northwest ¼ of Section 29, Township 2 North, Range 38 East. **21-392**

Attached is part 1 of 2 of the application for Annexation and Initial Zoning of LC, Limited Commercial and R2, Mixed Residential which includes the Annexation Ordinance and Reasoned Statement of Relevant Criteria and Standards for 55.033 acres, Northwest ¼ of Section 29, Township 2 North, Range 38 East. The Planning and Zoning Commission considered this item at its November 9, 2021, meeting and recommended approval by a unanimous vote. Staff concurs with this recommendation.

Recommended Action:

1. Approve the Ordinance annexing 55.033 acres, Northwest ¼ of Section 29, Township 2 North, Range 38 East under a suspension of the rules requiring three complete and separate readings and request that it be read by title and published by summary (or consider the Ordinance on the first reading and that it be read by title, reject the Ordinance, or take other action deemed appropriate).

2. Approve the Reasoned Statement of Relevant Criteria and Standards for the annexation of 55.033 acres, Northwest ¼ of Section 29, Township 2 North, Range 38 East and give authorization for the Mayor to execute the necessary documents (or take other action deemed appropriate).

Attachments: Zoning Map .jpg
Aerial.jpg
Comp Plan Map.jpg
Staff Report.doc
Land Use Table Residential.pdf
Use Tables.pdf
PC Minutes.docx
P&Z Written Testimony.pdf
CC Email Testimony Carr.pdf
CC Email Testimony Johnson.pdf
CC Email Testimony Carter.pdf
Ordinance
Exhibit A.pdf
Map Exhibit.pdf
Reasoned Statement Annexation.docx

4) Public Hearing-Part 2 of 2 of the Annexation and Initial Zoning of LC, Limited Commercial and R2, Mixed Residential, Initial Zoning Ordinance and Reasoned Statement of Relevant Criteria and Standards, 55.033 Acres, NW ¼ of Section 29 Township 2 North, Range 38 East. **21-393**

Attached is part 2 of 2 of the application for Annexation and Initial Zoning of LC, Limited Commercial and R2, Mixed Residential which includes the Initial Zoning Ordinance and Reasoned Statement of Relevant Criteria and Standards for 55.033 Acres, NW ¼ of Section 29 Township 2 North, Range 38 East. The Planning and Zoning Commission considered this item at its November 9, 2021, meeting and recommended approval of LC, Limited Commercial and R2, Mixed Residential by a unanimous vote. Staff concurs with this recommendation and recommends approval.

Recommended Action:

1. Assign a Comprehensive Plan Designation of “Commercial” and “Higher Density” and approve the Ordinance establishing the initial zoning for LC, Limited Commercial and R2, Mixed Residential as shown in the Ordinance exhibits under a suspension of the rules requiring three complete and separate readings and request that it be read by title and published by summary, that the City limits documents be amended to include the area annexed herewith, and that the City Planner be instructed to reflect said annexation, amendment to the Comprehensive Plan, and initial zoning on the Comprehensive Plan and Zoning Maps located in the Planning office (or consider the Ordinance on the first reading and that it be read by title, reject the Ordinance, or take other action deemed appropriate).

2. Approve the Reasoned Statement of Relevant Criteria and Standards for the Initial Zoning of LC, Limited Commercial R2, Mixed Residential and give authorization for the Mayor to execute the necessary documents (or take other action deemed appropriate).

Attachments: Zoning Map.jpg
Aerial.jpg
Comp Plan Map.jpg
Ordinance
Exhibit A.pdf
Map Exhibit
Reasoned Statement Zoning.docx

5) Public Hearing-Rezone from R3A, Residential Mixed Use, R1, Single Dwelling Residential, PB, Professional Business Office and R2, Mixed Residential to LC, Limited Commercial and R2, Mixed Residential, Zoning Ordinance and Reasoned Statement of Relevant Criteria and Standards, Approximately 3.079 acres, SW ¼, NW ¼ of Section 29, Township 2 North, Range 38 East. **21-395**

Attached is the application for Rezoning from R3A, R1, PB and R2 to LC and R2, Zoning Ordinance, and Reasoned Statement of Relevant Criteria and Standards for approximately 3.079 acres, SW ¼, NW ¼ of Section 29, Township 2 North, Range 38 East. The Planning and Zoning Commission considered this item at its November 9, 2021, meeting and recommended to the Mayor and City Council approval of the zone change with a unanimous vote. Staff concurs with this recommendation.

Recommended Action:

1. Approve the Ordinance Rezoning approximately 3.079 acres, SW ¼, NW ¼ of Section 29, Township 2 North, Range 38 East from R3A, R1, PB and R2 to LC and R2, under suspension of the rules requiring three complete and separate readings and request that it be read by title and published by summary (or consider the Ordinance on the first reading and that it be read by title, reject the Ordinance, or take other action deemed appropriate).

2. Approve the Reasoned Statement of Relevant Criteria and Standards for the Rezone from R3A, R1, PB and R2 to LC and R2 and give authorization for the Mayor to execute the necessary documents (or take other action as deemed appropriate).

Attachments: Zoning Map.jpg
Aerial.jpg
Comp Plan Map.jpg
Staff Report.docx
Land Use Table Residential.pdf
Use Tables.pdf
Apple Dev Zoning Exhibit.pdf
PC Minutes.docx
Email Groetzinger.pdf
Ordinance
Reasoned Statement Zoning.docx
Exhibit 1

6) Public Hearing-Rezone from HC, Highway Commercial to LC Limited Commercial, Zoning Ordinance and Reasoned Statement of Relevant Criteria and Standards for approximately 20.5 acres in the northwest 1/4 northeast 1/4 of Section 16, Township 2 North, Range 38 East and Lots 1 and 2, Block 1 Liberty Park. **21-419**

Attached is the application for Rezoning from HC to LC, Zoning Ordinance, and Reasoned Statement of Relevant Criteria and Standards for approximately 20.5 acres in the northwest 1/4 northeast 1/4 of Section 16, Township 2 North, Range 38 East and Lots 1 and 2, Block 1 Liberty Park. The Planning and Zoning Commission considered this item at its February 2, 2022, meeting and recommended to the Mayor and City Council approval of the zone change with a unanimous vote. Staff concurs with this recommendation.

Recommended Action:

1. Approve the Ordinance Rezoning approximately 20.5 acres in the northwest 1/4 northeast 1/4 of Section 16, Township 2 North, Range 38 East and Lots 1 and 2, Block 1 Liberty Park from HC to LC, under suspension of the rules requiring three complete and separate readings and request that it be read by title and published by summary (or consider the Ordinance on the first reading and that it be read by title, reject the Ordinance, or take other action deemed appropriate).

2. Approve the Reasoned Statement of Relevant Criteria and Standards for the Rezone from HC to LC and give authorization for the Mayor to execute the necessary documents (or take other action as deemed appropriate).

Attachments:
01 Zoning .jpg
02 Comp Plan.jpg
04 Aerial Z out.jpg
CC Rezone Staff Report.docx
PC Minutes.docx
Ordinance
Reasoned Statements.docx

7) Public Hearing-Part 1 of 2 of the Annexation and Initial Zoning-Annexation Ordinance and Reasoned Statement of Relevant Criteria and Standards for 22.669 acres, Northeast ¼ of Section 31, Township 3 North, Range 38 East. **21-422**

Attached is part 1 of 2 of the application for Annexation and Initial Zoning of R3A, Residential Mixed Use with the Airport Overlay Zone of Approach Surface which includes the Annexation Ordinance and Reasoned Statement of Relevant Criteria and Standards for 22.669 acres, Northeast ¼ of Section 31, Township 3 North, Range 38 East. The Planning and Zoning Commission considered this item at its January 4, 2022, meeting and recommended approval by a unanimous vote. Staff concurs with this recommendation.

Recommended Action:

1. Approve the Ordinance annexing 22.669 acres, Northeast ¼ of Section 31, Township 3 North, Range 38 East under a suspension of the rules requiring three complete and separate readings and request that it be read by title and published by summary (or consider the Ordinance on the first reading and that it be read by title, reject the Ordinance, or take other action deemed appropriate).

2. Approve the Reasoned Statement of Relevant Criteria and Standards for the annexation of 22.669 acres, Northeast ¼ of Section 31, Township 3 North, Range 38 East and give authorization for the Mayor to execute the necessary documents (or take other action deemed appropriate).

Attachments: Zoning .jpg
Aerial.jpg
Comp Plan Map.jpg
Staff Report.docx
Land Use Tables.pdf
Airport Overlay Land Use Tables.pdf
Airport.jpg
Airport.jpg
PC Minutes.docx
Ordinance
Exhibit A.pdf
Exhibit Map.pdf
Reasoned Statement Annexation.docx

8) Public Hearing-Part 2 of 2 of the Annexation and Initial Zoning of R3A, Residential Mixed Use with an Airport Overlay Zone of Approach Surface, Initial Zoning Ordinance and Reasoned Statement of Relevant Criteria and Standards, 22.669 Acres, Northeast ¼ of Section 31 Township 3 North, Range 38 East. **21-423**

Attached is part 2 of 2 of the application for Annexation and Initial Zoning of R3A, Residential Mixed Use with the Airport Overlay Zone of Approach Surface which includes the Initial Zoning Ordinance and Reasoned Statement of Relevant Criteria and Standards for 22.669 Acres, Northeast ¼ of Section 31 Township 3 North, Range 38 East. The Planning and Zoning Commission considered this item at its January 4, 2022, meeting and recommended approval of R3A, Residential Mixed Use with the Airport Overlay Zone of Approach Surface by a unanimous vote. Staff concurs with this recommendation and recommends approval.

Recommended Action:

1. Assign a Comprehensive Plan Designation of "Residential and Estate" and approve the Ordinance establishing the initial zoning for R3A, Residential Mixed Use with the Airport Overlay Zone of Approach Surface as shown in the Ordinance exhibits under a suspension of the rules requiring three complete and separate readings and request that it be read by title and published by summary, that the City limits documents be amended to include the area annexed herewith, and that the City Planner be instructed to reflect said annexation, amendment to the Comprehensive Plan, and initial zoning on the Comprehensive Plan and Zoning Maps located in the Planning office (or consider the Ordinance on the first reading and that it be read by title, reject the Ordinance, or take other action deemed appropriate).

2. Approve the Reasoned Statement of Relevant Criteria and Standards for the Initial Zoning of R3A, Residential Mixed Use and give authorization for the Mayor to execute the necessary documents (or take other action deemed appropriate).

Attachments: Zoning Map .jpg
Aerial.jpg
Comp Plan Map.jpg
Ordinance
Exhibit A.pdf
Exhibit Map.pdf
Reasoned Statement Zoning.docx

9) Ordinance amending Title 10, chapter 7 of the City of Idaho Falls Form Based Code Use Category and Subcategory Table to allow neighborhood retail and neighborhood services in the Edge C Subdistrict. **21-396**

Attached is an ordinance amending the Form Based Code for the Downtown District to allow for neighborhood retail and neighborhood services in the Edge C Subdistrict. The purpose of an Edge Subdistrict is to, "…provide a transition between the Core and General Subdistricts and adjacent open space, residential or alternative Place Types." The code also specifies that the Edge C Subdistrict, "…provides an important transition between Core Subdistricts and existing established single unit residential areas. Mixed-use development is lower in intensity." This low-intensity guide is the reason for selecting "neighborhood" scale retail and service, which limits the uses and size of the use. Edge C covers F and G Streets on the north end of town, which historically have included retail and service uses, but were left out of the allowed use tables in the code. On January 4, 2022, the Planning and Zoning Commission recommended approval of the amendment to the Form Based Code as presented to the Mayor and City Council. Voting was unanimous.

Recommended Action:
To approve the Ordinance amending the Form Based Code to allow neighborhood retail and neighborhood services in the Edge C Subdistrict under a suspension of the rules requiring three complete and separate readings and request that it be read by title and published by summary (or consider the Ordinance on the first reading and that it be read by title, reject the Ordinance, or take other action deemed appropriate).

Attachments: Staff report Amend Table 10 Chptr 7.doc
Subdistrict Map.docx
Updated Use Table.pdf
Ordinance

10) Public Hearing and Resolution to Adopt the Capital Improvement Plan and Development Impact Fee Study **21-415**

Idaho Code Title 67, Chapter 82 authorizes cities and counties to impose development impact fees to cover the costs of necessary infrastructure and facility improvements in compliance with the requirements of the Act.

In order to implement an equitable impact fee system for the public facilities identified and to include 1.) parks, 2.) police, 3.) fire/EMS and 4.) transportation, the City retained TischlerBise, Inc. to prepare an impact fee study titled "Capital Improvement Plan and Development Impact Fee Study of City of

Idaho Falls, Idaho 2021", dated December 15, 2021. The study developed maximum supportable development impact fees that could be imposed on new development to meet the new demands generated for public facilities within the City.

The study has been reviewed by staff and the Impact Fee Advisory Committee. Impact fee discussions were held at Work Sessions on November 8, 2021, November 22, 2021 and February 7, 2022. The Impact Fee Advisory Committee voted to recommend the City Council accept the impact fee study at their meeting held on January 24, 2022.

Staff recommends approval of the Resolution adopting the study. Adoption of the study does not require the City to implement impact fees but is a required step in order for the City to consider them.

Recommended Action:
Approve the Resolution to adopt the Capital Improvement Plan and Development Impact Fee Study (or other action deemed appropriate).

Attachments: Impact Fee Study Resolution 2.22.22.docx
Idaho Falls Impact Fee Study_12.15.21.pdf

11) Public Hearing for a Resolution adopting "Imagine IF: A Plan to Move Idaho Falls Forward Together" as the City's Comprehensive Plan. **21-394**

Attached is a resolution adopting "Imagine IF: A Plan to Move Idaho Falls Forward Together" as the City's Comprehensive Plan. The final draft of the document can be accessed at www.imagineif.city. Imagine IF reflects the results of a tremendous amount of public comment and engagement, background research, interviews, surveys, and recommendations from the project advisory committee. It will replace the current Comprehensive Plan which was adopted in December 2013. The Planning and Zoning Commission considered the plan at its October 19, 2021, meeting and recommended approval by a 5-1 vote. The plan was reconsidered on January 4, 2022, after a section was added regarding impact fees. At that meeting, the Planning and Zoning Commission unanimously voted to recommend approval of the Comprehensive Plan Amendment as presented. Staff concurs with this recommendation.

Recommended Action:
Approve the Resolution adopting "Imagine IF: A Plan to Move Idaho Falls Forward Together" as the City's Comprehensive Plan and give authorization for the Mayor and City Clerk to execute the necessary documents (or take other action deemed appropriate).

Attachments: Resolution -Comprehensive Plan 2.16.22.pdf

12) Public Hearing and Ordinance to Adopt, Collect and Administer City Development Impact Fees **21-416**

Idaho Code Title 67, Chapter 82 authorizes cities and counties to impose development impact fees to cover the costs of necessary infrastructure and facility improvements in compliance with the requirements of the Act.

In order to implement an equitable impact fee system for the public facilities identified and to include 1.) parks, 2.) police, 3.) fire/EMS and 4.) transportation, the City retained TischlerBise, Inc. to prepare an impact fee study titled "Capital Improvement Plan and Development Impact Fee Study of City of

Idaho Falls, Idaho 2021", dated December 15, 2021. The study developed maximum supportable development impact fees that could be imposed on new development to meet the new demands generated for public facilities within the City.

The City's Legal Department has developed the proposed Ordinance in compliance with the provisions required by State Statute. Staff recommends approval of the Ordinance and an effective date for implementation of May 1, 2022.

Recommended Action:
Approve the Ordinance to Adopt, Collect and Administer City Development Impact Fees under a suspension of the rules requiring three complete and separate readings and request that it be ready by title and published by summary (or consider the Ordinance on the first reading and that it be read by title, reject the Ordinance, or take other action deemed appropriate).

Attachments: Ordinance

6. Announcements.

7. Adjournment.

Memorandum

File #: 21-410 **City Council Meeting**

FROM: Bear Prairie, General Manager
DATE: Tuesday, February 15, 2022
DEPARTMENT: Idaho Falls Power

Subject
Resolution Amending the Idaho Falls Power Service Policy

Council Action Desired
☐ Ordinance ☒ Resolution ☐ Public Hearing
☐ Other Action (Approval, Authorization, Ratification, etc.)
Approve the resolution amending the Idaho Falls Power Service Policy and give authorization for the Mayor and City Clerk to execute the necessary documents (or take other action deemed appropriate).

Description, Background Information & Purpose
Idaho Falls Power staff and board members review and discuss the utility's Service Policy annually to make any necessary additions, modifications, or updates to ensure the document remains a useful and relevant tool for customers.

Alignment with City & Department Planning Objectives

☐ ☒ ☐ ☐ ☐ ☒ ☐ ☐

Improving the IFP Service Policy with added clarity and safety features demonstrates our readiness for good governance and a safe community. It also supports the customer exchange and safety elements of the IFP Strategic Plan.

Interdepartmental Coordination
Legal has reviewed and approved the updates to the service policy.

Fiscal Impact
This is a policy review and update, so there is no impact to the IFP budget.

Legal Review
Legal has reviewed and approved the updates to the Service Policy.

RESOLUTION NO. 2022-

A RESOLUTION OF THE CITY OF IDAHO FALLS, IDAHO, A MUNICIPAL CORPORATION OF THE STATE OF IDAHO, ADOPTING THE REVISED IDAHO FALLS POWER SERVICE POLICY (2022); PROVIDING SEVERABILITY, CODIFICATION, PUBLICATION BY SUMMARY, AND ESTABLISHING EFFECTIVE DATE.

WHEREAS, the City owns and operates a municipal electric utility, Idaho Falls Power ("IFP"), employing a number of dedicated employees in the electric trade and providing services to many customers; and

WHEREAS, the City has authorized IFP to promulgate written rules and regulations and/or customer service policies regarding its delivery of electrical services pursuant to Idaho Falls City Code; and

WHEREAS, IFP has developed a Service Policy relative to procedures for new and existing services; and

WHEREAS, the Council agrees that the updated and revised Service Policy attached is an appropriate service policy to help ensure consistent and fair conditions of delivery of electrical services by IFP.

NOW, THEREFORE, BE IT RESOLVED BY THE MAYOR AND COUNCIL OF THE CITY OF IDAHO FALLS, AS FOLLOWS:

1. On behalf of Idaho Falls Power, the Idaho Falls City Council hereby endorses and adopts the attached Idaho Falls Power Service Policy (2022) as the governing set of rules, regulations, and/or customer service policies regarding delivery of electrical services by IFP to electric customers.

2. That all prior Service Policies are hereby superseded and no longer applicable.

ADOPTED and effective this _____ day of _____, 2022

ATTEST: CITY OF IDAHO FALLS, IDAHO

_____ _____

KATHY HAMPTON, CITY CLERK REBECCA L. NOAH CASPER, Ph.D., MAYOR

(SEAL)

STATE OF IDAHO)
) ss:
County of Bonneville)

I, KATHY HAMPTON, CITY CLERK OF THE CITY OF IDAHO FALLS, IDAHO, DO HEREBY CERTIFY:

> That the above and foregoing is a full, true and correct copy of the Resolution entitled, "A RESOLUTION OF THE CITY OF IDAHO FALLS, IDAHO, A MUNICIPAL CORPORATION OF THE STATE OF IDAHO, ADOPTING THE REVISED IDAHO FALLS POWER SERVICE POLICY (2022); PROVIDING SEVERABILITY, CODIFICATION, PUBLICATION BY SUMMARY, AND ESTABLISHING EFFECTIVE DATE."

_____
Kathy Hampton, City Clerk

(SEAL)

SERVICE POLICY

Effective 2022~~1~~

This Policy provides information on the Idaho Falls Power (IFP) procedures for new and existing services and what will be required of a Customer desiring electric service. This Policy is based in part on current Idaho Falls City Code. It is to be used only as a guide and shall not be considered to be complete with respect to all possible service configurations or special or extenuating circumstances. Questions pertaining to this Policy should be directed to the Engineering Manager, or the Distribution Superintendent at (208) 612-8430. **Any deviations from this Policy must receive prior IFP written approval.**

~~C~~Changes new to this edition:

~~1. Added statement that customers must provide additional secondary to wrap around riser and standard and exceptions for riser material. Section II.B.5 Added definitions for ISPWC.~~

1. Added note that free draining aggregate must be in fiber junction box ~~for hh1 and secondary transformer~~. Note 4 in Fig. 7

2. Added statement for the standard markings for meter sockets and their corresponding units and verifications required. Section V.I.1

3. Added the option to use 1.25" continuous duct fiber conduit. Section III.D.1

4. Clarification on bolt lengths on the light pole foundations. Fig.10

5. ~~Metering identification for multi-unit dwellings.Add not about schedule 80 vs IMC vs Rigid.Using trakit contractor to verify meter matches apartment unit number prior to certificate of occupancy~~Added that all ~~Section d-tranch and conduit~~ future use~~-~~ needs 2x4 marking ~~for all future conduits~~and must be capped. Section III.D.3

6. Add~~e~~d fiber ONT ~~details~~ recommendations when it comes up on the hous~~e~~e. Fig 33

7. ~~24" radius elbow if using rigid 2" fiber risers.Myers Cabinet as only option~~Trailer parks are no longer ~~Commercial~~commercial. Deleted from Section I (Definitions)

~~Updated Figure 7, Figure 8, Figure 12, Figure 16, Figure 30, and Figure 31.~~

~~2. Added Figure 32 Fiber / Power Secondary Trench details.~~

~~3. Joint use attachment construction standards (Section X).~~

~~4. Added lighting design and installation requirements for commercial applications.~~

~~5. Added clarification on meter installations.~~

~~6. Added clarification on Customer Generation.~~

~~7. Added clarification on meter packs and multi-family dwellings.~~

~~8.~~ Table of Contents

I. DEFINITIONS: 9
II. SERVICE REQUIREMENTS 11
A. General Service Requirements: 11
B. Commercial Service Requirements 12
C. Commercial Service Requirements for Operation 13
D. Residential Service Requirements 14
E. Multi-Family Service Requirements 15
F. Construction and Temporary Service 16
G. Requesting Changes to Existing Services (service upgrades) 16
H. Illumination of Public Rights-of-Ways 17
I. Required Conductor Clearances 18
J. Fault Current Calculations 18
III. TRENCH AND CONDUIT ..... 20~~16~~
A. General Requirements ..... 20~~16~~
B. Primary Conduit ..... 21~~17~~
C. Secondary Conduits ..... 22~~18~~
D. Future Use Conduits ..... 24~~20~~
IV. PADMOUNT EQUIPMENT REQUIREMENTS ..... 25~~20~~
A. Single-Phase Transformers ..... 25~~20~~
B. Three-Phase Transformers ..... 25~~21~~
C. Sectionalizing Cabinets, Ground Sleeves, Secondary Pedestals, and Fiber Boxes ..... 25~~21~~
D. Modifying Exterior Appearance of Equipment ..... 26~~22~~
V. GENERAL METERING REQUIREMENTS ..... 26~~22~~
A. Location of Meters ..... 26~~22~~
B. Meter/Point of Service Disconnect ..... 27~~23~~
C. Determining Self-Contained or CT Metering ..... 27~~23~~
D. Residential Metering Requirements ..... 27~~23~~
E. Commercial Metering Requirements ..... 28~~23~~
F. Meter Bases ..... 30~~26~~
G. Installation of Meters ..... 31~~27~~

H. Removal of Meters ..... 32~~27~~
I. Meter Identification ..... 32~~27~~
J. Master Metering ..... 32~~28~~
VI. SECURITY LIGHTING ..... 33~~29~~
A. Program Requirements ..... 33~~29~~
VII. CUSTOMER GENERATION ..... 33~~29~~
A. Generation Facility Design and Installation Requirements ..... 33~~29~~
B. Generation Facility Design Specifications: ..... 33~~29~~
C. Generation Facility Net-Metering and Power Purchases ..... 37~~32~~
VIII. ELECTRIC VEHICLE CHARGING STATION PROGRAM REQUIREMENTS .. 38~~33~~
A. Electric Vehicle Charging Station Installation ..... 38~~33~~
IX. SMALL WIRELESS FACILITIES ..... 40~~36~~
A. Purpose. ..... 40~~36~~
B. Definitions. ..... 40~~36~~
C. Locations of Wireless Facilities and Related Ground Equipment. ..... 42~~38~~
D. Order of Preference regarding SWF attachment to existing facilities and SWF Support Poles. 44~~39~~
E. Guidelines on Placement ..... 44~~39~~
X. JOINT USE ATTACHMENT CONSTRUCTION STANDARDS AND POLICY ..... 45~~41~~
A. Purpose. ..... 45~~41~~
B. Application Procedures ..... 45~~41~~
C. Make-Ready Work ..... 45~~41~~
D. All pole attachments shall be made in accordance with the most current version of the following standards, as applicable: ..... 45~~41~~
E. Position and space ..... 46~~41~~
F. Clearances ..... 46~~42~~
G. Vertical Risers ..... 46~~42~~
H. Climbing Space ..... 46~~42~~
I. Anchors and Down Guys ..... 46~~42~~
J. Service Drops ..... 47~~42~~
K. Tagging ..... 47~~43~~
L. Pole Removal ..... 47~~43~~
M. Nonfunctional Attachments ..... 47~~43~~

~~I. DEFINITIONS: 7~~
~~II. SERVICE REQUIREMENTS 9~~
~~A. General Service Requirements: 9~~
~~B. Commercial Service Requirements 10~~
~~C. Commercial Service Requirements for Operation 11~~
~~D. Residential Service Requirements 12~~
~~E. Multi-Family Service Requirements 13~~
~~F. Construction and Temporary Service 13~~
~~G. Requesting Changes to Existing Services (service upgrades) 14~~
~~H. Illumination of Public Rights-of-Ways 14~~
~~I. Required Conductor Clearances 15~~
~~J. Fault Current Calculations 15~~
~~III. TRENCH AND CONDUIT 18~~
~~A. General Requirements 18~~
~~B. Primary Conduit 19~~
~~C. Secondary Conduits 20~~
~~D. Future Use Conduits 22~~
~~IV. PADMOUNT EQUIPMENT REQUIREMENTS 22~~
~~A. Single-Phase Transformers 22~~
~~B. Three-Phase Transformers 23~~
~~C. Sectionalizing Cabinets, Ground Sleeves, Secondary Pedestals, and Fiber Boxes 23~~
~~D. Modifying Exterior Appearance of Equipment 23~~
~~V. GENERAL METERING REQUIREMENTS 24~~
~~A. Location of Meters 24~~
~~B. Meter/Point of Service Disconnect 25~~
~~C. Determining Self-Contained or CT Metering 25~~
~~D. Residential Metering Requirements 25~~
~~E. Commercial Metering Requirements 25~~
~~F. Meter Bases 28~~
~~G. Installation of Meters 29~~
~~H. Removal of Meters 29~~
~~I. Meter Identification 29~~

~~J. Master Metering ..... 30~~
~~VI. SECURITY LIGHTING ..... 31~~
~~A. Program Requirements ..... 31~~
~~VII. CUSTOMER GENERATION ..... 31~~
~~A. Generation Facility Design and Installation Requirements ..... 31~~
~~B. Generation Facility Design Specifications: ..... 31~~
~~C. Generation Facility Net Metering and Power Purchases ..... 34~~
~~VIII. ELECTRIC VEHICLE CHARGING STATION PROGRAM REQUIREMENTS ..... 35~~
~~A. Electric Vehicle Charging Station Installation ..... 35~~
~~IX. SMALL WIRELESS FACILITIES ..... 38~~
~~A. Purpose. ..... 38~~
~~B. Definitions. ..... 38~~
~~C. Locations of Wireless Facilities and Related Ground Equipment. ..... 40~~
~~D. Order of Preference regarding SWF attachment to existing facilities and SWF Support Poles. ..... 41~~
~~E. Guidelines on Placement ..... 42~~
~~X. JOINT USE ATTACHMENT CONSTRUCTION STANDARDS AND POLICY ..... 43~~
~~A. Purpose. ..... 43~~
~~B. Application Procedures ..... 43~~
~~C. Make Ready Work ..... 43~~
~~D. All pole attachments shall be made in accordance with the most current version of the following standards, as applicable: ..... 43~~
~~E. Position and space ..... 43~~
~~F. Clearances ..... 44~~
~~G. Vertical Risers ..... 44~~
~~H. Climbing Space ..... 44~~
~~I. Anchors and Down Guys ..... 44~~
~~J. Service Drops ..... 44~~
~~K. Tagging ..... 45~~
~~L. Pole Removal ..... 45~~
~~M. Nonfunctional Attachments ..... 45~~
~~I. DEFINITIONS: ..... 7~~
~~II. SERVICE REQUIREMENTS ..... 9~~

~~A. General Service Requirements: 9~~
~~B. Commercial Service Requirements 10~~
~~C. Commercial Service Requirements for Operation 11~~
~~D. Residential Service Requirements 12~~
~~E. Multi-Family Service Requirements 13~~
~~F. Construction and Temporary Service 14~~
~~G. Requesting Changes to Existing Services (service upgrades) 14~~
~~H. Illumination of Public Rights-of-Ways 15~~
~~I. Required Conductor Clearances 15~~
~~J. Fault Current Calculations 16~~
~~III. TRENCH AND CONDUIT 18~~
~~A. General Requirements 18~~
~~B. Primary Conduit 19~~
~~C. Secondary Conduits 20~~
~~D. Future Use Conduits 22~~
~~IV. PADMOUNT EQUIPMENT REQUIREMENTS 22~~
~~A. Single-Phase Transformers 22~~
~~B. Three-Phase Transformers 23~~
~~C. Sectionalizing Cabinets, Ground Sleeves, Secondary Pedestals, and Fiber Boxes 23~~
~~D. Modifying Exterior Appearance of Equipment 23~~
~~V. GENERAL METERING REQUIREMENTS 23~~
~~A. Location of Meters 24~~
~~B. Meter/Point of Service Disconnect 25~~
~~C. Determining Self-Contained or CT Metering 25~~
~~D. Residential Metering Requirements 25~~
~~E. Commercial Metering Requirements 25~~
~~F. Meter Bases 28~~
~~G. Installation of Meters 29~~
~~H. Removal of Meters 29~~
~~I. Meter Identification 29~~
~~J. Master Metering 30~~
~~VI. SECURITY LIGHTING 30~~

~~A. Program Requirements ..... 30~~
~~VII. CUSTOMER GENERATION ..... 31~~
~~A. Generation Facility Design and Installation Requirements ..... 31~~
~~B. Generation Facility Design Specifications: ..... 31~~
~~C. Generation Facility Net-Metering and Power Purchases ..... 34~~
~~VIII. ELECTRIC VEHICLE CHARGING STATION PROGRAM REQUIREMENTS ..... 35~~
~~A. Electric Vehicle Charging Station Installation ..... 35~~
~~IX. SMALL WIRELESS FACILITIES ..... 37~~
~~A. Purpose. ..... 37~~
~~B. Definitions. ..... 38~~
~~C. Locations of Wireless Facilities and Related Ground Equipment. ..... 39~~
~~D. Order of Preference regarding SWF attachment to existing facilities and SWF Support Poles. 41~~
~~E. Guidelines on Placement ..... 41~~
~~X. JOINT USE ATTACHMENT CONSTRUCTION STANDARDS ..... 42~~
~~A. Purpose. ..... 42~~
~~B. Application Procedures ..... 42~~
~~C. Make-Ready Work ..... 43~~
~~D. All Attachments shall be made in accordance with the most current version of the following Applicable Standards. ..... 43~~
~~E. Position and space ..... 43~~
~~F. Clearances ..... 44~~
~~G. Vertical Risers ..... 44~~
~~H. Climbing Space ..... 44~~
~~I. Anchors and Down Guys ..... 44~~
~~J. Service Drops ..... 44~~
~~K. Tagging ..... 45~~
~~L. Pole Removal ..... 45~~
~~M. Nonfunctional Attachments ..... 45~~

I. DEFINITIONS:

CHARGING STATION: IFP-supplied equipment that is leased to a customer for the purpose of charging electrically powered vehicles.

CITY: City of Idaho Falls, Idaho.

COMMERCIAL: Development that is non-residential or, for the purpose of construction and maintenance of the electric infrastructure, a development that is Multi-Family Housing with three or more attached units with a meter pack (master-metered). (See International building code for more information about the commercial classification)

CONTRACTOR: Any person or entity who is doing work that will require electric service or other interaction from IFP. Contractor is a general term that can apply to one (1) or more property developer, owner, owners' agent, or other entity performing work at location.

CT METER: A metering system where the current is measured indirectly with a current transformer.

CUSTOMER: The person(s) who will be the owner(s) of the property where the service is provided and who shall be responsible for the ongoing costs of maintenance and service.

CUSTOMER-GENERATOR: A customer with a small generation facility (solar, wind, etc.) who has a net-metering agreement with IFP.

GENERATION EQUIPMENT: Equipment **(**solar panels, small wind, gas-generators, etc.) used in the generation of electricity.

ISPWC: Idaho Standards for Public Works Construction

IFP: The City of Idaho Falls, Idaho, dba Idaho Falls Power.

INFILL LOTS: Platted or unplatted property left after development has been complete or that have been developed in the past and the structures have since been removed that may be subject to line extension fees.

MASTER-METERED: One (1) meter that measures the electrical service for more than one (1) living unit or commercial interest.

MOBILE HOME PARK: Development that has three or more stand-alone residential unitsees built on parcel(s) under common ownership, wired to HUD standards, and typically mobile homes where each unit has a self-supported meter base, or that is master metered. ~~This type of development is considered Commercial for the purpose of construction and maintenance of the electric infrastructure.~~

Commented [WL1]: Change 7.

Commented [BJ2]: Only need to delete this last sentence.

NESC: National Electric Safety Code, which is the governing standards for electric utilities.

NET ENERGY: The difference between the electricity consumed by the Customer-

Generator and the electricity produced by the Customer-Generator's Generation equipment and facility.

NET-METERING: A system in which a small generation facility, (e.g., renewable energy generators), are connected to the power grid and surplus power is transferred onto the grid, allowing customers to offset the cost of power drawn from IFP.

PRIMARY: The parts of the IFP system that are operated at a nominal 15kv phase-phase. Actual operating voltages are 12,400 volts phase-phase and 7,200 volts phase-ground.

RESIDENTIAL: Single Family Home (independent meter attached to a wall), Multi-Family Housing (two units with a meter pack or master-metered), and Single Family Attached (individual service to each house with meter attached to the individual house).

SECONDARY: The parts of the IFP system that are operated below 600 volts.

SELF-CONTAINED METER: A non-instrumented single-phase meter under four hundred (400) amps (class 320) or a three- (3) phase meter under two hundred (200) amps.

II. SERVICE REQUIREMENTS

SERVICE FEES: CONSISTENT WITH IDAHO FALLS CITY CODE, ALL FEES OR COSTS, APPLICABLE TO LINE EXTENSIONS FOR RESIDENTIAL OR COMMERCIAL INDIVIDUAL CUSTOMERS OR DEVELOPMENTS SHALL BE PAID IN ADVANCE OF ANY INSTALLATION OF ELECTRICAL INFRASTRUCTURE. APPLICABLE FEES ARE PUBLISHED IN THE FEE SCHEDULE ESTABLISHED BY CITY COUNCIL RESOLUTION.

A. General Service Requirements:

1. A Customer desiring new electric service from IFP must first secure a building permit from the City Building Department. For all three-phase and commercial projects, it is required that the Customer coordinate service plans directly with IFP prior to seeking a building permit. The Customer shall provide a completed transformer load sheet and information necessary for IFP to provide electrical service, including but not necessarily limited to: preferred service location (overhead or underground service), single-phase or three-phase service, total connected load, electric heat and air conditioning load, required voltage, and the number and size of motors with ratings greater than ten (10) horsepower.

2. The International Building Code and International Residential Code determines if a building is commercial verses residential for the purpose of construction and maintenance of the electric infrastructure. Power consumption charges and line extension fees are based on the occupancy type and are listed in The Fee Schedule Established by City Council Resolution.

3. The Customer is solely responsible for the selection, installation, and maintenance of all electrical equipment and wiring, on the load side of the point of delivery (other than IFP's meters and apparatus). The Customer shall be responsible to provide adequate protective measures for all electric motor installations.

~~3.~~

4. The Customer shall be responsible to install and maintain surge suppressors, auxiliary power units or other protective devices for the protection of computers, computer software and programming, televisions, or other equipment sensitive to voltage spikes, surges, sags, transients, noise interruptions or outages.

5. The Customer shall install and maintain all suitable protective devices and equipment to protect the Customer, life and/or property, from harm or injury from electric current because IFP shall assume no duty to warn or to otherwise assist the Customer in the selection of or use of electrical appliances, tools, equipment, or facilities.

6. Whenever a Customer's equipment has characteristics which causes interference

(e.g., harmonics, transients, waveform distortions, fluctuations, etc.) with IFP's service to other Customers, the Customer causing the interference shall make changes in such equipment or provide, at Customer's expense, additional equipment to eliminate the interference. Power quality of the Customer shall meet the IEEE 519 standard, ANSI C84.1 standard, and City Code 8-5-26.

7. Padmounted equipment (including ground sleeves / pedestals, etc.) shall not be provided or set until curb and gutter have been installed. Approval from IFP is required prior to any deviation from this requirement.

8. IFP's required easements for the electric and fiber lines shall be identified and designated prior to construction. In general, easements for electric and fiber service shall be twelve feet (12') in width. Along rights-of-way (ROW) easements shall be a minimum of fifteen feet (15'). Proposed easement width may vary depending on road classifications and IFP future planning needs.

9. New utility easements of less than twelve feet (12') in width require prior approval from IFP design staff. It is the Customer's responsibility to have IFP's designated easements surveyed and dedicated to the City.

B. Commercial Service Requirements

1. Commercial services are defined as Non-residential and Multi-Family Housing that has three or more units attached with a meter pack (see International Building Code). Exceptions on ~~case by case~~case-by-case basis shall be coordinated by IFP and Building Department.

2. Prior to design, every commercial and industrial Customer shall provide the following information to IFP:

   a) A plot plan indicating the preferred service entrance location

   b) If previously recorded public utility easements or are not available, provide easements to IFP for underground power cable, as indicated on the marked-up plot plan described above. If the indicated easement locations present problems, the Contractor is responsible to obtain permission for a different routing from IFP.

   c) Proposed transformer location (final determination will be made by IFP)

   d) A completed transformer load sheet (attached to review sheet or by pdf from IFP design)

   e) All electrical requirements including number of phases, voltage, connected single-phase and three-phase loads.

   f) Determine location of loads, approximate size of loads and possible future load needs. All three-phase underground installations shall be served with Y connected secondary only (i.e. 120/208 or 277/480).

g) No service work, cable pulls, or connects will be made unless the site address is posted in a conspicuous place.

3. Determine location of service entrance, approximate size of loads, and an estimate of future electric loads

4. Provide a meter base, standard power riser, weather head, and/or suitably anchored attachment point to allow connection to IFP's designated service tap point. Install IFP provided CTs

5. Provide necessary easements to connect the Customer to IFP's designated interconnection point. Easements are required for primary conductor only, except in rare cases where an easement for overhead secondary conductor may be necessary (because it crosses property boundaries).

6. IFP will then provide the meter and current transformers and aerial overhead conductor. Note that no Customer owned equipment will be permitted on IFP's poles.

~~3.~~7. Contractor / Customer is required to provide and install all secondary conductor and to ensure adequate coil at each end for IFP to terminate.~~.~~

~~Provide a meter base, standard power riser, weather head, and/or suitably anchored attachment point to allow connection to IFP's designated service tap point. Install IFP provided CTs.~~

~~4. The Customer shall provide enough secondary conductor to make connection to the transformer and be able to coil the conductor at the end of the riser. The riser shall be RGS (Rigid Galvanized Steel) to the meter base and adjacent elbow if surface mounted on the house, schedule 40 PVC is only accepted if mounted within framed wall, otherwise any exceptions must be approved by IFP prior to construction.~~

Commented [GC3]: This I think should be deleted because it is already stated in Section III, C, 9, b and c

~~5. Provide necessary easements to connect the Customer to IFP's designated interconnection point. Easements are required for primary conductor only, except in rare cases where an easement for overhead secondary conductor may be necessary (because it crosses property boundaries).~~

~~IFP will then provide the meter and current transformers and aerial overhead conductor. Note that no Customer owned equipment will be permitted on IFP's poles.~~

~~6.~~

C. Commercial Service Requirements for Operation

1. The Customer is solely responsible for the selection, installation, and maintenance of all electrical equipment and wiring, on the load side of the point of delivery (other than IFP's meters and apparatus). The Customer shall be responsible to

provide adequate protective measures for all electric motor installations.

2. The Customer shall be responsible to install and maintain surge suppressors, auxiliary power units or other protective devices for the protection of computers, computer software and programming, televisions, or other equipment sensitive to voltage spikes, surges, sags, transients, noise interruptions or outages.

3. The Customer shall install and maintain all suitable protective devices and equipment to protect the Customer, life and/or property, from harm or injury from electric current because IFP shall -assume no duty to warn or to otherwise assist the Customer in the selection of or use of electrical appliances, tools, equipment, or facilities.

4. Whenever a Customer's equipment has characteristics which causes interference (e.g., harmonics, transients, waveform distortions, fluctuations, etc.) with IFP's service to other Customers, the Customer causing the interference shall make changes in such equipment or provide, at Customer's expense, additional equipment to eliminate the interference. Power quality of the Customer shall meet the IEEE 519 standard, ANSI C84.1 standard, and City Code 8-5-26.

D. Residential Service Requirements

1. Residential services are defined as a Single Family Home, Multi-Family Housing (two units with a meter pack~~ or over two units with a meter pack if in designated as a trailer park~~), and Single Family Attached (individual service to each house with meter attached to the individual house).

2. Line extension fees will be established by Resolution of the City Council. Additional clarification for infill lots are as follows:

   a) Infill lots that were planned with services and that have adequate IFP infrastructure are not subject to the per lot fee or other line extension fees. If it is determined that the infrastructure needs upgraded to serve than this will be billed as an extra line extension fee.

   b) Infill lots that were not planned as a residential lot are subject to the per lot fee.

   c) Infill lots that have no IFP power infrastructure fronting or adjacent to the property are subject to the per lot fee plus all other applicable line extension fees to provide power to the property as determined by IFP.

3. New underground residential electric systems shall be installed in front lot locations and shall be determined by IFP. See Section III for trenching and conduit requirements.

4. Service Entrance and Meter Base:

   a) The meter shall be located within five feet (5') of the nearest front corner of

the house to the existing transformer or pedestal. Conduit is to have a maximum of 360° degree of bends. Services shall conform to Attached Figures of this Policy. Meter location requirements herein are to be used only as a guide and shall not be considered complete with respect to all possible service configurations or special extenuating circumstances. Any deviation of meter placement must have prior, written approval from IFP. The centerline of the meter should be five feet six inches (5'6") above the finished grade or walkway. If structural details prevent this, the centerline height shall be not less than four feet (~~-~~4') or more than six feet (6').

5. Power Cables:

   a) IFP will provide and install the necessary primary cable. IFP will provide and install the necessary secondary cable for services up to three hundred (300) amps.

   b) The cables will be installed in the Contractor provided conduit to connect the Contractors' service point to the City's pad-mounted transformer or pedestal. The Contractor is required to establish a final grade compacted to a minimum of ninety-five percent (95%) of maximum density at each transformer and service pedestal on location large enough for placement of IFP's transformer pad and/or pedestal. See Attached Figures of this Policy. The Contractor should coordinate work with IFP.

   c) The Contractor's service entrance equipment must be in place and approved by the electrical inspector before final hookup. Installed conduit shall be inspected by IFP to ensure proper conduit depth and installation. Cable will not be installed until the trench has been backfilled.

6. High Voltage Transformers and Sectionalizing Cabinets:

   a) The high voltage equipment shall not be enclosed in any manner which will restrict the dissipation of heat. A ten foot (10') minimum clearance and access must be maintained in front of the cabinet door. A ~~two foot~~two-foot (2') clearance should be maintained on all other sides of the equipment. Fences or landscaping installed within this clearance will be removed at the Customer's expense should servicing be required. See Attached Figures of this Policy.

   b) Additionally, overhead service wire length has a maximum length of one hundred twenty-five feet (125').

E. Multi-Family Service Requirements

1. Conduits and conductors used to service the building will be determined by IFP for Residential only (up to two units with a meter pack). For Commercial applications (three units or more with a meter pack) conduits and conductors will be determined and provided by the~~d by the by~~ Contractor/~~ or~~ Customer. See Section III for trenching and conduit requirements. Secondary conductor(s) will

be terminated at one (1) point Customer's premises (~~i.e.~~i.e., main breaker, disconnect or similar tap point). IFP's conductor(s) shall not be used as a bus in gutters, etc.

2. A Contractor / Developer can install a meter pack as an alternative to individual meters on individual walls. Conduits and conductors can penetrate the firewall on Single Family Attached dwellings (see building regulations and coordinate with Building Department). Easements and agreements will need to be in place between each Property Owner / Home owner's association. Contractor / Owner shall communicate to IFP the type of construction when requesting approval.

3. Line extension fees are based on occupancy and will be established by Council Resolution. Multi-Family Housing line extension fees are only applicable when there is a meter pack of three (3) or more units.

F. Construction and Temporary Service

1. IFP will charge a fee for the installation and removal of power for a temporary facility to existing infrastructure (e.g., within thirty feet (30') of underground or one hundred twenty-five feet (125') from overhead tap point). This fee will be established by Resolution of the City Council and shall be paid at the City Building Department at the time of building permit application. Due to varied field conditions, the Contractor or Customer will need to coordinate a site visit with IFP staff at (208)612-8430 to determine installation requirements. If providing the service requires pole installation or transformer placement, an additional one-time fee shall be paid to IFP prior to the installation of the temporary service. Temporary Service request forms with current associated fees are available at the Building Department.

2. Examples of temporary facilities include a construction trailer or Christmas tree lot, which would require a line extension and/or transformer. Temporary power service shall be limited to three (3) months post completion for construction projects or to one (1) year of continuous service for non-construction services.

3. The Contractor or Customer must provide service pole and meter base, and have it approved by the City's electrical inspector. The service pole cannot be more than one hundred twenty-five feet (125') from the designated IFP interconnection point. The service pole shall be tall enough to allow for appropriate traffic clearance and be strong enough to support the service conductors.

G. Requesting Changes to Existing Services (service upgrades)

1. Any Customer may request a change to an existing service, including upgrades, expansion, extension or relocation. Customers requesting change in existing service shall pay labor and materials costs associated with the service change. All payments will be made in advance of the change in service. Residential service upgrades must comport to City Code 10-3-5(Z)(8) for zoning. Primarily, the use

of utilities shall not be beyond that reasonably used for residential services, e.g. cryptocurrency mining would not be considered a residential use.

2. The Contractor or Customer shall be responsible for costs incurred by IFP for the repair of any of its facilities damaged by the Contractor or Customer or a third party working on behalf of the Contractor or Customer. IFP will provide information and services in advance of maintenance or construction activities (such as dropping and reconnecting overhead service lines for tree trimming) at no charge, if scheduled during regular business hours.

H. Illumination of Public Rights-of-Ways

1. It shall be the Customer or Contractor's responsibility to provide illumination (street lights) along or within the public rights-of-way contained within a new development.

   a) IFP will coordinate with the Developer regarding design and construction responsibilities for lighting.

      (1) When determined by IFP, Contractor to utilize flood seals and compact compression connector Burndy YPC2A8U bg die or w-bg die; or approved equal for all connector taps.

2. All new light pole foundations and lighting conduits shall be constructed by the Contractor in accordance with current Service Policy Figure 10, ISPWC (Idaho Standards for Public Works Construction), and City of Idaho Falls standard specifications. IFP will furnish to the Contractor a bolt hole template (pending availability), anchor bolts, nuts, washers, grounding butt plate, and ground wire needed for the installation of the light poles. Contractor may utilize a precast light pole base as long as it matches all specifications.

   a) The Customer shall purchase or construct a concrete light pole base per current IFP specifications in the location indicated on the IFP Contractor Map. The final light pole location will be determined by IFP. If the Customer chooses to pour in place the pole base, IFP must be contacted for inspection of pole base prior to the base being poured. Light Pole base shall conform to Attached Figures of this Policy. A light pole will not be installed on the pole foundation until it has cured a minimum of seven (7) days. When the temperature is forty (40º) degrees or lower the pole foundation shall be covered with an insulated tarp.

3. Contractor to ensure adequate backfill at proposed light pole bases and utilize ¾" gravel to maximize compaction.

4. IFP will install poles and luminaires along or within the public rights-of-way with the cost of materials paid by the Contractor prior to installation, except in the commercial applications described above.

I. Required Conductor Clearances

1. See Service Policy Figures for required clearances of overhead power lines to driveways, parking lots, alleys, areas of farm and construction equipment, pedestrian traffic, vehicular traffic, railroads, water ways, and other miscellaneous clearance exhibits. If the clearance is not ~~shown~~shown, please contact IFP staff. Note all clearances are derived from the NESC.

2. Contact IFP at (208) 612-8430 for permits, inspections, authorizations, and clearances not addressed in this Policy.

J. Fault Current Calculations

1. The NEC requires that new service entrance equipment is rated to interrupt the available fault current. To assist customers, IFP is providing the tables below showing a calculated maximum potential secondary fault current (Isc) and the information necessary to allow the calculations of the maximum fault current for most applications.

2. The tables are built with the following assumptions:

   a) The tables do not use an infinite buss but the maximum primary fault current of IFP's system which is 8000 amps.

   b) The tables were developed with a minimal 15 feet of secondary conductor (wire) is installed from the transformer. For a more accurate calculation the customer can use the actual length of conductor and actual conductor size. Calculating tools such as Eaton Bussmann's FC^2 application can be used.

3-Phase Padmount Transformers					
Transformer KVA	Secondary Voltage L-L	Secondary Voltage L-N	Lowest %Z	Isc w/ 15ft Wire	Wire Size
45	208	120	2.8	4216	4/0
75	208	120	0.9	17773	4/0
75	480	277	1.3	6508	4/0
112.5	208	120	1.2	22129	1-500
112.5	480	277	1.9	6668	4/0
150	208	120	1.1	30138	1-500
150	480	277	1.2	13147	4/0
225	208	120	1.5	35161	2-500
225	480	277	1.4	17074	1-500
300	208	120	1.4	48886	3-500
300	480	277	1.3	23330	1-500
500	208	120	1.5	71114	4-500
500	480	277	1.5	32504	2-500
750	208	120	5.4	34719	6-500
750	480	277	3	25812	3-500
1000	208	120	5.8	42437	8-500
1000	480	277	5.5	19591	4-500
1500	480	277	5.6	27583	5-500
2000	480	277	5.6	35237	7-500
2500	480	277	5.5	42818	8-500

1-Phase Padmount Transformers					
Transformer KVA	Secondary Voltage L-L	Secondary Voltage L-N	Lowest %Z	15ft 1/0 AL Isc L-L	15ft 1/0 AL Isc L-N
15	240	120	1.1	5008	6192
25	240	120	1	8355	9246
37.5	240	120	1.6	7931	8895
50	240	120	1	13950	13131
75	240	120	2.4	9952	10487
100	240	120	1.3	18221	15395
167	240	120	1.8	20181	16286
1-Phase Polemount Transformers					
Transformer KVA	Secondary Voltage L-L	Secondary Voltage L-N	Lowest %Z	15ft #2AL Isc L-L	15ft #2AL Isc L-N
15	240	120	1.1	4721	5382
25	240	120	1	7585	7549
37.5	240	120	1.6	7234	7314
50	240	120	1	11928	9954
75	240	120	2.4	8878	8357
100	240	120	1.3	14917	11202
167	240	120	1.8	16206	11667

III. TRENCH AND CONDUIT

A. General Requirements

1. Please contact the applicable IFP Design staff as noted on the approval drawings or through the main IFP engineering office at (208) 612-8430 prior to starting any trench and conduit work.

2. IFP requires all IFP-owned conductor to be in conduit. The Customer shall provide and install all conduits as required from the IFP identified interconnection location through new or existing easements to the Customer's transformer pad as set out in Section 2.A.1 of this Policy. In the event it is necessary for IFP to loop feed through the Customer's property, the Customer may be required to open an additional trench to place conduit from the transformer to an exit point from the Customer's property. The Customer may also be required to provide easements for the trench. All electric conduits shall be PVC Schedule 40 (see note 3 and 4 for exceptions). All elbows shall be PVC Schedule 40 large radius sweep (36") or as otherwise specified by IFP (see note 3 and 4 for exceptions). RGS elbows and conduit must be used at riser poles or where conduit will be exposed out of the ground. Conduits must be capped and labeled to identify routing. No conduit run shall have more than 360 degrees of bends. Maximum lengths of conduit runs shall be determined by IFP. Conduit shall only be bent with approved methods (i.e., blanket warmer or rigid conduit bender). No torches allowed.

3. 2" HDPE SDR 13.5 continuous duct can be utilized by the Contractor instead of 2 ½" PVC Schedule 40 as specified on the Contractor Map for proposed 1/0 single phase primary conductor. Conduit to be red in color or black with red stripes (red conduit preferred). If possible HDPE to be ordered with "IFP" stamped on conduit. The HDPE can be turned up inside of ground sleeves and secondary pedestals or Contractor may transition to 2" PVC Schedule 40 large radius sweep (36") with Perma-Guard/UL fittings by Arnco Shur-Lock II or approved equal by IFP.

4. On all conduit runs of 75 feet or greater and all services from the meter base to the transformer / secondary pedestal; the contractor will install 2500 lb. "mule tape". When available, and only if requested, IFP will provide used mule tape.

5. Contractor will install pull string for fiber optic conduit runs (future use conduit).

6. Developer / Contractor shall provide all construction staking and layout of new electrical facilities per design.

7. All conduit, including bell ends, shall be supplied and installed by the Contractor. Bell ends shall be installed at transformers, secondary pedestals, sectionalizing cabinets, and light pole locations. See attached Figures of this Policy for

installation guidelines. Conduits must be capped and labeled to identify routing.

B. Primary Conduit

1. The minimum power trench shall have a minimum depth of fifty-four inches (54") and maximum depth of sixty inches (60") below finish grade (Conduit to be installed 48" below finish grade). Including 6" of sand bedding below and above top of conduits. See below for bedding requirements. Minimum trench width shall be twenty-four inches (24"), unless otherwise noted. Before final backfill, IFP shall be notified when the conduit is in place. IFP will inspect all conduit installations before backfilling for proper depth and installation. Trench to be backfilled within two weeks of IFP conduit installation. Failure to obtain an inspection prior to backfill may result in the re-excavation of the trench.

2. Minimum primary conduit depth can be reduced to eighteen inches (18") of cover below final grade through basalt or other rock upon prior approval of IFP. Rigid galvanized steel (RGS) conduit shall be provided and installed by the Contractor where trench depth is less than forty-eight inches (48"). IFP will specify the conduit size.

3. IFP will specify the conduit size. Contact applicable IFP staff upon completion of pulling a mandrel through the conduit to ensure the conduit is free from obstructions. Any additional or future costs due to broken, damaged, obstructed or poorly assembled conduits will be paid by the Customer.

4. IFP will provide the pole and all primary conductors, if crossing existing streets with overhead primary conductor to a pole located near the new service location. The Contractor shall provide and install the first length (i.e. ten feet (10') of RGS conduit) up the pole above the contractor supplied RGS elbow. All elbows at the base of the pole shall be a large radius ~~three foot~~three-foot (3') RGS steel. All conduits installed on IFP poles will be on approximately ~~eight inch~~eight-inch (8") standoffs.

5. If an underground road crossing is made, the Contractor will provide all conduit and will bore conduit beneath the roadway or provide a trench in which to install conduit. The use of high density polyethylene (HDPE) continuous conduit shall be used at select road crossing locations with prior approval from IFP. Conduit shall be Perma-Guard/UL and fittings shall be Arnco Shur-Lock II or an approved equal approved by IFP. IFP will inspect all conduit installations before backfilling for proper depth and installation. Trenches across existing roadways must also be approved by the City Public Works Department.

6. A minimum of six inches (6") of sand bedding is required above and below all conduits. An IFP staff may determine that the native soil is suitable for bedding material. Additionally, bury/caution tape shall be buried two feet (2') above the top of conduit. IFP will inspect all conduit installations before backfilling for

proper depth and installation. Prior to cable installation, trenches must be backfilled and transformer and sectionalizing cabinet ground sleeves as well as secondary pedestals must be in place.

7. In all cases the Contractor shall be responsible for backfill and compaction of cable trenches and repair of street crossings. Per City standards, all electrical trenches shall be compacted to a minimum of ninety-five percent (95%) of maximum density to prevent settlement. Failure to properly repair the street wherein defects (e.g. settlement) appear within one (1) year will result in the City billing the responsible party for all costs incurred by the City to fix the roadway.

8. A minimum of one foot (1') clearance shall be maintained between primary high voltage cable and all other utilities and service voltage cables, except at crossings (where a separation should exist to allow future repairs of either utility approximately two inches (2") minimum).

C. Secondary Conduits

1. The trench for secondary conduit shall have a minimum depth of thirty inches (30") below final grade. Minimum trench width shall be twenty-four inches (24"), unless otherwise noted. Before final backfill, IFP shall be notified when the conduit is in place. IFP will inspect all conduit installations <u>before</u> backfilling for proper depth and installation. Trench to be backfilled within two weeks of IFP conduit installation. Failure to obtain an inspection prior to backfill may result in the re-excavation of the trench.

2. Minimum secondary conduit depth can be reduced to eighteen inches (18") of cover below final grade through basalt or other rock upon prior approval of IFP. Rigid galvanized steel (RGS) conduit shall be provided and installed by the Contractor where trench depth is less than thirty inches (30"). IFP will specify the conduit size.

3. IFP will specify the conduit size (exception: commercial secondary conduit). Contact applicable IFP staff upon completion of pulling a mandrel through the conduit to ensure the conduit is free from obstructions. Any additional or future costs due to broken, damaged, obstructed or poorly assembled conduits will be paid by the Customer.

4. The Customer provides, installs and retains ownership of all commercial secondary service conductors and conduits from building (or load) to transformer (or source).

5. When service can be met from an existing power pole, the Contractor shall install all secondary cable to the pole and shall provide sufficient secondary cable to reach from the pole top connection point to the Customer's meter base or other point of connection.

6. The Customer shall provide and install the first length (i.e. ten feet (10') RGS conduit up the pole above the contractor supplied RGS elbow. All conduits installed on IFP poles will be on approximately eight inches (8") standoffs. Commercial secondary trench and cable are the Customer's responsibility, and no easements will be required by IFP. All future maintenance, locating, and repair of secondary shall be the Customer's responsibility.

7. Contractor shall provide and install necessary meter bases, current transformer (CT) boxes, and install IFP provided CTs in CT boxes. Commercial metering requirements are contained in Section V. of this Policy, with additional commercial metering requirements in Section V.E. of this Policy.

8. Following such installations, IFP will install meter, meter wiring, etc.; place a transformer on the concrete pad; pull primary cable through Contractor-installed conduit; and connect primary cables to the primary terminals of the pad-mounted transformer. IFP makes up secondary connections in the transformer and provides connectors for standard cable up to and including five hundred (500) kcm. If greater than five hundred (500) kcm cable is to be used, the Contractor provides connectors and/or other special facilities. Finally, IFP connects the primary cable to its power system at the designated tap point after all requirements are met.

9. Where the service is fed from an overhead transformer, the Contractor or Customer will install conduit to the pole where the transformer is mounted.

   a) The Contractor or Customer will install rigid galvanized, three- (3') foot radius elbow and one (1) ten (10') foot length of rigid galvanized steel conduit up the pole (for residential the size of conduit is to be determined in Contractor's Map, for commercial the size is determined by Electrician).

   b) The Contractor or Customer will provide enough conductor to make connection to the transformer and coil it at the top of the end of the riser.

   ~~c) Schedule forty (40) PVC is acceptable only if mounted within the framed wall. If surface mounted on the house or self-supported meter base, the riser to the meter base and adjacent elbow shall be RGS.~~

   ~~d)~~c) IFP will inspect all conduit installations before backfilling for proper depth and installation. Meter base shall be framed and braced before the power cable will be pulled into the base. After IFP inspects conduit, an authorization for backfill sticker will be placed on conduit or meter base.

   ~~e)~~d) All trenches will be compacted to a minimum of ninety-five percent (95%) of maximum density to prevent settlement.

   ~~f)~~e) It shall be the property owner's responsibility to maintain integrity of secondary conduit at their expense.

10. On residential secondary conduit extensions, IFP will provide transformer ground

Commented [GC4]: This has been under a sub-heading of overhead secondary power – I moved this under item 10 residential secondary conduit extensions.

sleeves, ground rods, and secondary pedestals. Following IFP providing the ground sleeve and pedestal, and before transformer or service pedestal is installed, the Contractor shall install two ~~ten foot~~ten-foot (10') length of two and one-half inches (2½") schedule 40 PVC secondary conduit with three foot radius (3') sweep, if required from each transformer and/or pedestal on approximately a 45° degree angle into each lot to be served with electrical service (unless otherwise noted on Contractor's Map). See Attached Figures of this Policy.

a) Contractor / Customer will connect to existing conduit stubs and extend to the house per Figure 32 of the attached Figures.

(1) Schedule forty (40) PVC conduit is acceptable for the riser and the ~~two foot~~two-foot (2') radius elbow at the house if mounted within the framed wall. If surface mounted on the house or self-supported-meter base, the riser to the meter base and adjacent elbow shall be RGS. ~~–~~Any exceptions to this shall be coordinated with IFP prior to construction.

~~a)~~b) ~~Three inch~~Three-inch (3") conduit with ~~three foot~~three-foot radius (3') sweeps shall be required from pedestal or transformer to the meter panel if residential service has a 400 amp panel. Coordinate with IFP.

11. Any residential secondary service that is connected from another secondary service or has multiple services interconnecting (daisy chain) will be deemed Commercial. IFP will not be responsible nor maintain those services, unless prior approval by IFP.

Commented [GC5]: Where we are removing trailer parks from commercial, I thought we should add this comment.

D. Future Use Conduits

1. Contractor shall provide and install two-inch (2") future use conduit (fiber conduit) in the trench per Contractor's Map. With prior approval from IFP, orange one and a quarter inch (1.25") HDPE conduit may be used instead.

Commented [WL6]: Change 3.

a) Future use conduit (fiber conduit) shall be stubbed up into Idaho Falls Power supplied fiber boxes.

b) Location of fiber boxes shall be determined by Idaho Falls Power.

2. Contractor or Customer shall provide and install one inch (1") future use (fiber conduit) from existing fiber box to the house. As an option the Contractor or Customer can utilize Idaho Falls Power supplied three-quarter inch (3/4") micro duct (see figure 32).

a) Minimum of twenty-four ~~inch~~inches (24") of burial depth.

b) Contractor or Customer to ensure both ends of the conduit are capped off with a PVC cap and marked Idaho Falls Fiber.

3. Contractor or Customer shall cap the ends of future use conduits and ~~wi~~~~shall~~ mark them with 2x4s.

Commented [WL7]: Change 5.

~~b)~~

IV. PADMOUNT EQUIPMENT REQUIREMENTS

A. Single-Phase Transformers

Transformer ground sleeves and ground rods shall be provided by IFP, but shall be picked up at the IFP warehouse and/or IFP designated facility and installed by the Contractor in conformance with Attached Figures of this Policy. The ground sleeve location shall be compacted to a minimum of ninety-five percent (95%) of maximum density prior to placement. The top of the transformer pad shall be installed a minimum of six inches (6") above final grade. The pad shall be level and aligned accordingly. A minimum ~~ten foot~~ten-foot (10') clear area is required in front of the transformer and a minimum of ~~two foot~~two-foot (2') clearance is required on the other three (3) sides of the transformer. The transformer location will be determined by IFP.

B. Three-Phase Transformers

1. The Customer shall purchase or construct a concrete transformer pad per current IFP specifications in the location indicated on the marked-up plot plan. A minimum ~~ten foot~~ten-foot (10') clear area is required in front of the transformer pad and a minimum of ~~two foot~~two-foot (2') clearance is required on the other three (3) sides of the pad. The final transformer location will be determined by IFP.~~-~~ If the Customer chooses to pour their own pad, IFP must be contacted for inspection of transformer form prior to the pad being poured. Pad design shall conform to Attached Figures this ~~Policy. The~~Policy. The pad location shall be compacted to a minimum of ninety-five percent (95%) of maximum density prior to concrete placement. The pad shall be level and aligned accordingly. A transformer will not be installed on the pad until it has cured a minimum of seven (7) days. No more than eight (8) conduits on the secondary side of a transformer shall be installed. When the temperature is forty (40º) degrees or lower the pad shall be covered with an insulated tarp. Transformer ground sleeves and ground rods shall be provided by IFP, but shall be picked up at the IFP warehouse and installed by the Contractor in conformance with Attached Figures of this Policy.

   a) When more than eight conduits are required for the secondary service, coordinate with IFP for the installation of a secondary cabinet to be located adjacent to the transformer. This secondary cabinet will also be used for the CT metering equipment in many applications.

C. Sectionalizing Cabinets, Ground Sleeves, Secondary Pedestals, and Fiber Boxes

1. Primary sectionalizing cabinet, ground sleeves, ground rods, secondary pedestals, and fiber boxes shall be provided by IFP, but shall be picked up at the IFP warehouse and/or IFP designated facility and installed by the Contractor in conformance with Attached Figures of this Policy. –The top of the sectionalizing

ground sleeve shall be installed a minimum of six inches (6”) above final grade. A minimum ~~ten foot~~ten-foot (10’) clear area is required in front of the primary voltage switch cabinet and a minimum of ~~two foot~~two-foot (2)’ clearance is required on the other three (3) sides. The location of the ground sleeves, ground rods, and secondary pedestals will be determined by IFP.

D. Modifying Exterior Appearance of Equipment

1. Painting of IFP padmounted equipment shall not be allowed. Wrapping will be allowed with preapproval only. Conditions ~~include;~~include; all of standard warning placards and transformer data to be included in the wrap, the wrap cannot cover the fins due to cooling requirements, and no commercial advertising.

V. GENERAL METERING REQUIREMENTS

These general metering requirements cover only the common meter installations. Infrequent or special applications which usually require the approval of IFP, are not included in these metering requirements. Wiring diagrams and other meter information may be obtained from the IFP Metering Department. All meters installed by IFP are owned by IFP and all maintenance of the meters shall be completed by IFP.

A. Location of Meters

1. Protection from ice, snow, rain or other damage shall be provided by the Customer for metering equipment, when location so demands. A meter shall not be located where it will be subjected to shock, vibration, or other damage. The Customer shall be responsible for the cost of repair for damage to the metering equipment due to lack of protection.

2. Meters shall be installed on the exterior of the structure and at a location which will be readily accessible at all times for reading, inspecting and testing. The meter shall not be contained inside a cabinet or utility closet. IFP does not recognize EUSERC standards.

3. Residential meters shall be front yard accessible unless prior approval for another location from IFP is obtained.

4. Meters shall be installed only in sockets which are plumb in all directions and securely fastened to the structure.

5. The centerline of the meter should be five foot, six inches (5’6”) above the finished grade or walkway. If structural details prevent this, the center line height shall be not less than four feet (4’) or more than six feet (6’) in height. See Attached Figures of this Policy.

6. In multiple meter installations such as apartment buildings or shopping centers, meters may be mounted in horizontal rows. The maximum allowable height from ground or walkway to the center line of the meter shall be six foot, six inches

(6'6"). The minimum allowable height shall be two feet (2').

7. In apartment or multiple-use buildings, meters shall not be installed above the first-story level or in the basement.

8. Sufficient access and working space shall be provided around all metering equipment to permit ready and safe operation, maintenance and testing of such equipment, with a minimum of three feet (3') front working space, minimum of 6 feet, 6 inches (6'6") head room and a minimum of three feet (3') wide plus permitting 180° degree opening of equipment doors or hinged panels.

9. Meters shall NOT be mounted on IFP owned poles or pad mount transformers.

10. If a service has been disconnected for any reason, IFP reserves the right to require an inspection prior to energizing.

B. Meter/Point of Service Disconnect

1. External main disconnect(s) shall be required on all new Residential points of service and meter base replacements. External main disconnect(s) shall be located after the meter.

   a) Provides point of disconnect for Customer side work, up to and including the main panel.

   b) Provides an accessible fire department point of disconnect in the event of a structure fire.

   c) Provides an accessible location of IFP to drop the load when working on the meter.

   d) External main disconnect will not be required if there is a dedicated transformer for the load and if the transformer has a disconnect switch inside of it.

2. IFP strongly recommends an external main disconnect on Commercial points of service.

C. Determining Self-Contained or CT Metering

1. If a Customer is CT metered, the metering shall be only for one (1) building under residential or commercial rate.

2. The City will require CT meters for all single-phase services greater than four hundred (400) amps and all three-phase services ~~of~~ greater than two hundred (200) amps.

D. Residential Metering Requirements

1. All single-phase Customers with a main switch ampacity between two hundred one (201) and four hundred (400) amperes will be metered with a self-contained,

~~meter~~ three hundred twenty (320) amp meter base. See Section V.E. of this Policy for meter base requirements.

E. Commercial Metering Requirements

1. All meters, ~~,~~ voltage and current leads, used with instrument transformers, shall be furnished and installed by IFP meter department personnel. CTs shall be furnished by IFP. Installation of CTs shall be coordinated with IFP meter department personnel.

2. All three-phase Customers with a main switch ampacity up to and including two hundred (200) amperes will be metered with a self-contained meter. All loads in excess of two hundred (200) amperes will be CT metered.

3. All meters or instrument transformers must be ahead of the Customer's disconnecting switch. Where multiple meter installations are required and a main switch is used, meters may be installed behind the main switch and ahead of the Customer's disconnect. No unmetered circuits will be connected to the main switch. Entrance wiring must be so arranged that metered circuits do not enter conduits, raceways or enclosures containing unmetered circuits.

4. CT installations shall not be more than fifty feet (50') from the meter base. Contractor shall install minimum one inch (1”) conduit for metering conductors only. Underground metering conduit shall be buried twenty-four inches (24”) in depth. Schedule 40 PVC with RGS above ground into meter base. CTs must be contained within a CT can or approved switchgear. A CT shall not be placed in transformers. If no building wall is available for mounting, see Free Standing CT Meter in Attached Figures of this Policy.

5. Enclosures for CTs shall be furnished and installed by the Customer (unless otherwise noted). Line and load connections shall be clearly labeled along with labeling all phases. All enclosures shall be at least eleven inches (11”) deep and of such size as to permit ready installation of current transformers on the size of conductor used. The table of enclosures for CTs, will be used as a guide for the minimum nominal size of metal cabinet to be used. All enclosures and meter bases shall have provisions for installing security seals and shall be installed at an accessible location on outside of building. IFP will not allow any Customer equipment to be installed on, or holes drilled in the transformer. Enclosures for CTs will be used on both underground and overhead instrument metered installations. The top of CT enclosure shall not exceed six feet (6’) above finished grade. The bottom of CT enclosure shall not be less than two feet (2’) above finished grade. Any variances to these requirements shall be determined by IFP.

   a) For services greater than 801 amps, the CT metering will be installed in an IFP approved pad mounted CT cabinet located adjacent to the transformer

(Contractor may use wall mounted CT enclosure for service ampacities of greater than 801 amps if the CT enclosure is rated for and meets minimum UL ratings). Contractor to provide CT cabinet (See Attached Figure 16 of this Policy). CT cabinet to be split bus per American Midwest Power Service Connection Cabinet or approved equal. Coordinate with IFP for required footprint and termination detail. Ground sleeve and ground rod shall be provided by Contractor and installed in conformance with Attached Figures of this Policy. The ground sleeve location shall be compacted to a minimum of ninety-five percent (95%) of maximum density prior to placement. The top of the CT ground sleeve shall be installed a minimum of six inches (6") above final grade. A concrete pad can be utilized instead of a ground sleeve but must have an 18"-24" deep basement for the conduits. Concrete pad must meet CT cabinet manufacturer standards for strength of the fully loaded CT cabinet and be a minimum of six inches (6") above finished grade. A minimum ~~three foot~~three-foot (3') clear area is required in front of the CT cabinet and a minimum of ~~two foot~~two-foot (2') clearance is required on the other three (3) sides of the CT cabinet. The CT cabinet location will be determined by IFP. Conductor will be provided and installed by IFP from Transformer to padmounted CT Cabinet on services greater than 801 amps. 4" conduit from Transformer to CT cabinet can have 24" radius elbows. CT Cabinet will be owned and maintained by Developer / Owner. CT Cabinet to be secured by an IFP-owned padlock.

1) CT Cabinet must meet minimum specifications given from American Midwest Power drawing "Service Connection Cabinet 'SCC' with CT provision" as follows or approved equal:

    a. Cabinet is free standing NEMA 3R. Frame is 12 gauge steel galvanized steel bolted together and include leveling provisions. All side plates are pan formed galvanized steel and are bolted to the frame with tamper-resistant zinc plated bolts. Enclosure is primed and painted transformer green enamel.

    b. Supporting structure for bus bars is bolted to framework such as that any phase bar can be relocated vertically as required to meet job requirements.

    c. Bus Bars are electrical grade plated aluminum #6101T65 per ASTM specifications # B317 supported on 17" centers using double plastic ~~insulators Copper~~insulators Copper bus available on special order. Current density is 750A/square inch maximum for Aluminum bus and 1000A/square inch maximum for Copper bus. Each bus

bar is punched with 16 sets of 9/16” square holes on 2” horizontally and 1 ¾” centers vertically.

d. Ratings are 2000A, 2500A, 3000A, 3600A, and 4000A at 600V maximum 3Ø-4W, 3Ø-3W, 1Ø-3W. All cabinets shall have bus braced for 85,000A RMS amperes short circuit current rating.

e. Connectors in a range of #2 to 750 MCM are available in set screw type or compression type for field or factory installation. Connectors will be factory installed on right side of bus unless otherwise specified. Up to (12) – 750 MCM or (24) – 250MCM conductors can be installed on each side, per bar.

f. Meets Standards – ETL listed and labeled conforms to U.L. standard 1773 termination boxes. Conforms to NEMA standards. Meets National Electrical Code requirements. Meets Power Company requirements.

6. CT meter bases located within six feet (6’) of the pad mount transformer shall be grounded and bonded to transformer to prevent touch potential.

ENCLOSURE FOR CURRENT TRANSFORMERS (CTs)

Service Entrance Conductor Ampacity	Minimum CT Cabinet Size (W x H x D)
401 & Above - 1Ø	36" x 48" x 11" (hinged door type) or smaller cabinet as approved by IFP
400 & Below - 3Ø	36" x 48" x 11" (hinged door type)
401 - 800	36" x 48" x 11" (hinged door type)
Over 801	To be coordinated and approved by IFP

F. Meter Bases

These meter base specifications cover all self-contained meter bases and transformer-rated meter bases.

1. The Customer or Contractor shall furnish meter bases and enclosures for all meter installations. All meter bases and enclosures will be installed by the Contractor and incorporated into the Customer's wiring.

2. Meter bases must be listed and installed to meet the National Electric Code and the National Electric Safety Code. Combination socket and disconnecting devices are approved for use, provided the base meets all other specifications and is wired on the line-side of the Customer's disconnecting device. Corrosion inhibitor shall be used on all connections to aluminum conductors.

3. All self-contained commercial service installations shall have factory installed lever or link bypass.

   a) IFP will allow exceptions to the bypass requirements for services with minimal and interruptible load. Services for commercial sprinkler systems controls is an example.

4. IFP will not provide new three-phase, three-wire self-contained service without a grounded neutral system.

5. Single-Phase Meter Bases

   a) Single-phase 320 ~~amp~~ residential meter base shall have factory installed lever or link bypass. Single-phase meter bases over four hundred (400) ampere shall be CT instrument metered using six (6) point socket type meter base with drilled and tapped mounting plate for test switch provisions.

   b) All 120/208V self-contained single-phase meter base installations shall be of a five (5) terminal socket-type meter base and installed such that the fifth terminal is in the 9 o'clock position.

6. Three-Phase Meter Bases

   a) Two hundred (200) ampere and below self-contained meter base installations on three-phase service shall be a seven (7) point terminal socket type meter base.

   b) Three-phase meter bases greater than two hundred (200) ampere's shall have a CT instrument metered installation using a thirteen (13) terminal socket-type meter base with a drilled and tapped mounting plate for connection of test switch equipment.

G. Installation of Meters

1. Authorized IFP personnel shall install meter on Customer provided meter base after the following steps have been taken:

   a) Must pass Inspection by Electrical Inspector.

   b) Customer to sign up for service at City of Idaho Falls Utility Billing.

   c) Utility Billing will then submit the connect order to IFP.

2. IFP generally installs meters within five (5) working days after confirmation of connect order from Utility Billing.

H. Removal of Meters

1. Only authorized IFP personnel shall be allowed to remove meters from meter bases on the Customer's premises.

I. Meter Identification

1. All MuliMulti Family Dwelling Units including all multi meter packs in commercial facilities Prior prior to the meter installation, IFP must be provideed IFP with a plan or diagram indicating which meter socket serves which unit. All meter sockets must be marked with the applicable unit address by some permanent means (i.e., not hand written with a "Sharpie") at a location on or near meter base. The electrical contractor must complete the Meter Verification form in Trakit before the final electrical inspection and CO can be issued. The Meter Verification form certifies that the meter matches the designated unit.serving a designated socket matches the unit # of that socket.On allAll commercial buildings and buildings all multi dwelling -unit meter bases serving 2 units or, meter sockets and units must be permanently labeled prior to meters being energized. An electrician will be required to coordinate with Idaho Falls Power for an onsite verification that the meter socket is connected to the correct unit (208-612-8430) before CO is issued. MarkingsLabels must be complete before meters can be installed. Labels shall be of a raised or embossed type, minimum size 3/4" x 2" engraved plastic with a sticky back. Letter or numbers must be a minimum of 7/16". Common gas and electric meters must have the same space designation marking i.e., numbers or letters. The building owner is responsible for proper identification of electric meters. The building owner could be held responsible for CLD costs associated with correcting billing errors caused by mixing wiring or mislabeled meters. If two electric services serve one building or space, a warning tag must be located at each meter point indicating such per NEC Article 230.2E. Labels, as described above, marked with voltage and phasing information are required if two or more services with different voltages or phasing are supplied to a building.

Commented [WL8]: Change 2.

J. Master Meteringg

1. IFP's retail rates are intended for application to individual customers or units of service. Master metering is prohibited. Except as specifically excepted hereinafter. Master metered mobile home parks, multi-occupant residential buildings, commercial buildings and shopping centers connected prior to July 1, 2010, may continue to receive master metered service.

2. Mobile Home Parks built before July 1, 2010, whose space for tenants have been sub-metered by the park Owners, need not be individually metered by IFP. Mobile home park tenants will be charged the same rate for electric service, as though they were directly metered and billed by IFP.

3. Multi-occupant residential buildings, commercial buildings and shopping centers may be master metered if the electric heating, ventilation, air conditioning or water heating systems are centrally located and cannot be controlled by the individual tenants.

4. A Master-Metered Customer may install sub-metering for individual spaces at the Customer's own expense. Any master metering system must be maintained by the building owner and installed by licensed electricians. Master metered Customers may also utilize a reasonable allocation procedure to determine a tenant's usage for the purpose of reimbursing the master metered customer. Such a procedure shall constitute an allocation and not a resale. Such terms must comply with City Code 8-5-9. The Customer shall indemnify IFP for any and all liabilities, actions or claims for injury, loss or damage to persons or property arising from the allocation of service by the customer.

5. IFP will not sell or otherwise provide meters or associated equipment required for sub-metering, nor test and maintain customer owned meters.

VI. SECURITY LIGHTING

A. Program Requirements

1. IFP can provide security lighting for private property for a fixed monthly charge.

2. The Customer will pay a fixed monthly charge for each luminaire, based upon the type of luminaire and wattage. The rates are published in the City Fee Resolution.

3. Security lights can only be affixed to IFP owned poles with the cost of installation paid by the Customer.

4. The City retains ownership of all facilities and equipment.

5. For more information contact IFP Energy Services at (208) 612-8430.

VII. CUSTOMER GENERATION

A. Generation Facility Design and Installation Requirements

1. All new electric generation equipment that a Customer desires to connect to the IFP distribution system shall be approved by IFP prior to connecting the generation equipment to the IFP distribution system.

2. Customer's operating such generation equipment are required to file a Customer Interconnection Agreement Application and adhere to the following conditions:

B. Generation Facility Design Specifications:

1. Facility Description

   a) The Generation Facility shall be designed, constructed and operated in a

manner such that it will interconnect and operate in parallel with IFP's electric supply system, in a safe and efficient manner without disruption, impairment, damage or loss of operational efficiency to IFP's electric supply system.

b) The operation of the Generation Facility is intended to offset a Customer-Generator's electric energy purchases from Idaho Falls Power.

c) The Customer-Generator shall be responsible for the design, installation and operation of the generation system and shall obtain and maintain all required permits and approvals.

d) Any modifications to the system (aside from routine maintenance), including installation of additional generation equipment, replacement panels, or added parts shall only be made following the prior written approval of IFP.

2. Generation Facility Fuel Type and Size Limitations

a) The Customer's Generation Facility shall have a maximum annual generating capacity of no more than the previous twelve (12) months of electric usage. Facilities found to be in excess of approved size will not be compensated for net-monthly surplus energy sent to IFP.

b) For new residential construction the Customer's Generation Facility shall not exceed five (5) kilowatt. After the first twelve (12) months of consumption history, the Customer may reapply for additional generation.

c) Commercial facilities will be based upon an Electrical Engineer's calculations not to exceed the estimated annual kilowatt consumption per meter. Facility must be reviewed and approved by IFP for capacity and qualifying specifications.

d) All Generation Facilities are subject to review and inspection at IFP's sole discretion. It is not IFP's intent to compensate a facility that generates more than its annual consumption. In cases of excess generation, IFP may require the Generation Facility arrangements to be renegotiated.

3. Generation Facility Installation Standards and Code Compliance:

a) Customer-Generator shall provide the electrical interconnection on the Customer-Generator side of the meter between the Generation Facility and IFP's system.

b) IFP shall make reasonable modifications to their system necessary to accommodate the generation system, with all IFP system modifications being paid for by the Customer. The cost for such modifications will be estimated by IFP, with Customer payment due in advance of installation.

c) The Generation Facility shall include all equipment necessary to meet applicable safety, power quality, and interconnection requirements. These requirements are, or may include,

(1) IFP's policies
(2) National Electrical Code
(3) National Electrical Safety Code
(4) Institute of Electrical and Electronic Engineers (e.g., IEEE 1547),
(5) Nationally Recognized Testing Laboratories (e.g., UL 1741)
(6) California Rule 21
(7) Hawaii Rule 14H
(8) Utility best practices.

d) IFP Engineering staff must approve each design drawing prior to construction of the Generation Facility. The drawings must comport to generally accepted engineering design practices and be submitted with the application. This review will be completed within thirty (30) days of application.

e) Upon completion of construction, the City Electrical Inspector shall give final inspection and approval for the Generation Facility to commence operation.

f) The Customer-Generator shall attend an orientation session with Idaho Falls Power staff. Call (208) 612-8456 for more information.

g) The Customer-Generator shall then file an application for Net-Metering and Small Generation Interconnection Agreement Application with, and receive approval from, IFP before installing an interconnected Generation Facility on Customer-Generator property. Application forms are available at the City of Idaho Falls Building Department. The completed application and Generation Facility system design drawing should be returned to the address listed on the application. The City of Idaho Falls Building Department will also require a building permit and electrical permit along with an additional copy of the system design for review. Review by the City of Idaho Falls Building Department and IFP will occur simultaneously. IFP may withhold approval, if for any reason the requested interconnection would result in a negative monetary or physical impact on IFP's electrical system.

4. Disconnection Device:

a) Customer-Generator shall furnish and install (on Customer-Generator side of the meter) a disconnecting device capable of fully disconnecting and isolating the facility from IFP's distribution system.

(1) The disconnecting device shall be located adjacent to IFP's bi-directional metering equipment and shall be of the visible break type, located in a metal enclosure that can be secured by an IFP-owned padlock or other security device.
(2) The disconnecting device shall be accessible to IFP's personnel at all times and shall conform to National Electric Code standards.
(3) IFP shall have the right to disconnect, with or without notice, the Generation Facility from IFP's distribution system in order to maintain

safe and reliable electrical operating conditions or to protect IFP's system from damage, disruption, interference, or to preserve system reliability.

(4) The Generation Facility shall remain disconnected until such time that IFP determines conditions justifying the disconnection have been resolved.

5. Generation Facility Operational Standards:

a) Customer-Generator shall furnish, install, operate and maintain in good order and repair, without cost to IFP, all equipment required for the safe operation of the Generation Facility operating in parallel with the IFP's electrical supply system. This shall include, but is not limited to, equipment necessary to

(1) Establish and maintain automatic synchronism with IFP's distribution system,

(2) Automatically disconnect the Generation Facility from IFP's distribution system in the event of system overload or outage and

(3) For Solar Facilities with backup battery storage, the system must automatically disconnect from and not back feed onto, IFP's distribution system in the event of a system overload or power disruption.

(4) The Customer-Generator's Generation Facility shall not cause any adverse effects upon the quality or reliability of service provided to IFP's other customers.

(5) IFP reserves the right to require that the Generation Facility modifications to comport with Idaho Falls electrical system change in needs or requirements or to negate any adverse impact the interconnected Facility has on other customers.

(6) The Generation Facility shall not cause any adverse effects upon the quality or reliability of service provided to IFP's other customers.

(7) The Customer-Generator shall operate the Generation Facility in accordance with applicable rules and regulations.

b) On an approximate three-year rotation, the Customer is required to confirm the status of the generation facility. In addition, IFP reserves the right to inspect the facility at any time for non-backfeed protection for utility safety requirements.

(1) IFP reserves the right to disconnect the generation facility, or if required the full service if the customer fails to confirm the status of the generation facility or allow for safety inspections.

6. Generation Facility Maintenance:

a) Except for bi-directional metering equipment owned and maintained by IFP, all equipment on the Customer-Generator's side of the meter, including the required disconnecting switch, shall be provided and maintained in

satisfactory operating condition by the Customer-Generator at the Customer's expense and shall remain the property and responsibility of the Customer-Generator. IFP shall bear no liability for Customer-Generator's equipment or for the consequences of its operation.

C. Generation Facility Net-Metering and Power Purchases

1. Measurement of Net Energy:

   a) Metering equipment shall be installed by IFP (solely at Customer-Generator's expense) to measure the flow of electrical energy to and from the customer premise.

2. Purchase of Energy:

   a) The Customer-Generator agrees to sell, and IFP agrees to issue a credit for, all electrical energy generated at the Generation Facility in excess of the Customer-Generator's on-site load in accordance with the current City fee resolution.

   b) WHERE CONSUMPTION EXCEEDS GENERATION:

      (1) If electricity supplied by Idaho Falls Power during the billing period exceeds the electricity generated by the Customer-Generator during the billing period, the Customer-Generator:

         (a) Shall be billed for the applicable non-energy charges for the billing period under the Customer's appropriate retail rate classification;
         (b) Shall be billed for the net electricity supplied by IFP at the Customer's appropriate rate adopted in ordinance for the corresponding period.

   c) WHERE GENERATION EXCEEDS CONSUMPTION:

      (1) If the electricity generated by the Customer-Generator exceeds the electricity supplied by IFP during the billing period the Customer-Generator:

         (a) Shall be billed for the applicable non-energy charges for the billing period under the Customer's appropriate rate classification;
         (b) Shall be financially credited for excess energy delivered to Idaho Falls Power during the billing period, at the rate adopted in ordinance for the corresponding period.

3. Renewable Energy Credits

   a) The Customer-Generator will release to IFP all renewable-energy credits (RECs), renewable-energy credits (S-RECs) or other renewable attributes as appropriate based on actual on-site electric generation from the Generation Facility. Credits will be released to IFP for the duration of the interconnection

to IFP's power system.

VIII. ELECTRIC VEHICLE CHARGING STATION PROGRAM REQUIREMENTS

A. Electric Vehicle Charging Station Installation

1. The following are Customer requirements for those who choose to participate in an IFP electric vehicle charging station lease:

a) Location

(1) The Customer is responsible for the selection of the charging station location, for both wall mount and pedestal mount charging stations with approval from IFP. Location must be approved by IFP prior to installation. IFP staff is available to assist in selecting suitable locations. To schedule an onsite assessment with an IFP representative, call (208) 612-8430.

b) Installation

(1) The Customer will be responsible to install the pedestal concrete pad base, conduit and wire, or conduit and wire for a wall mount location. See Attached Figures for the specification sheets for the pedestal installation. IFP is solely responsible for the installation of the charging station on the customers premise. If a charging station is to be installed on premises, which is leased, rather than owned, Customer must receive all necessary consent from the premises owner for the installation of the Charging Station by the Customer and allow access for operation and maintenance by IFP.

(2) Customer is responsible for acquiring all applicable permits and inspections for the construction and installation of the Station. In the event that an upgrade in electric service or wiring is required to support the stated load of the Station this will be the sole responsibility of the Customer.

(3) The Customer is responsible for all costs (labor and materials) associated with the installation site preparation: trenching, conduit, cement pedestal base, wire, etc.

c) Maintenance and Repair

(1) Standard Maintenance

(a) IFP will perform standard maintenance to the charging station to ensure it is in proper working condition throughout the term of the program. Maintenance includes cleaning the charging station connector, testing the charging voltage level, testing system functionality, and related minor work, as reasonably determined by IFP, to preserve the unimpaired function of the charging station.

(b) Customer will provide IFP access to the charging station and related equipment for maintenance between the hours of 7:00 a.m. and 7:00 p.m. local time on City business days. In the case of an emergency, Customer will allow IFP access, with notice, to the charging station and related equipment outside of normal maintenance times.

(2) Equipment Damage

(a) Customer is responsible, at its sole cost and expense, for actions related to the repair and replacement of a negligently damaged charging station to include vandalism.
(b) The Customer agrees that the facilities in which the charging station is located will be kept clean and in good repair.
(c) Customer will maintain structural portions of the premises surrounding the Charging Station, including the pavement, foundation, roof structure, walls, columns, beams, parking areas, and all adjoining common areas, in good condition and repair.
(d) If temporary removal of the Charging Station is required in connection with the repair of the Charging Station or building structure, Customer will provide IFP five (5) business day's prior written notice or a shorter but reasonable period in the event of an emergency.
(e) Customer may interrupt electric service to a Charging Station to ensure safety or when needed to repair or maintain the premises. After completion of the repairs or maintenance, Customer will promptly restore the affected charging station and notify IFP.
(f) IFP will not be responsible for damages caused by operation of the Charging Station, including failure of equipment to operate as intended.
(g) IFP will not be held responsible for any damage to the Customer's property or electrical system due to negligent use of or vandalism to the Charging Station.

(3) Continuity of service

(a) IFP will use reasonable diligence to supply constant electricity service to the charging station but does not guarantee the service against an irregularity or interruption.
(b) IFP may interrupt electric service to a Charging Station when necessary to maintain reliability of the electric distribution system, ensure safety, reduce peak demand, or to perform maintenance on the Charging Station or related equipment.
(c) IFP may install and operate additional meter(s), data monitoring equipment, or charge management devices which gather information regarding equipment usage.

(d) Such installation will be adjacent to or near the Charging Station but will not interfere with parking or pedestrian traffic paths on premises.

(4) Labeling and signage

(a) Charging Stations will be labeled by IFP.
(b) The Lessee will not remove, mar, deface, obscure, or otherwise tamper with the Charging Station labels.
(c) Customer can install signage provided by IFP or others (as approved by IFP) to identify charging station sponsor and provide information about Charging Station care.

(5) Charging Station Locations

(a) Charging Stations will be placed on the customer side of the electric meter.
(b) Power used by the Station will flow through the Customers meter and be billed at their appropriate rate class for the customer type as established in the current adopted rate resolution.
(c) The energy consumed by the Station(s) will not be metered separately or tracked independently of the Customers other electric usage at the location on the appropriate meter.

IX. SMALL WIRELESS FACILITIES

A. Purpose.

1. To provide design standards for Small Wireless Facilities (SWFs) also known as small cell installations. These standards are intended for 4G and 5G equipment installed on Idaho Falls Power (IFP) infrastructure located in the City of Idaho Falls and located in City-owned or City-controlled rights-of-ways and easements, but are also applicable to similar technologies such as wi-fi networks.

2. The City of Idaho Falls (City) encourages the deployment of small cell wireless technology within the City for the benefit it provides the citizens of Idaho Falls including increased connectivity and reliable networks and services.

3. The City desires to add this infrastructure with minimal negative impact to the character and aesthetics of our community.

4. The City has a fiduciary duty to manage the public right-of-way (ROW) for the health, safety, and welfare of the public.

5. These Design Standards are for siting and criteria for the installation of Wireless Facilities, including SWFs permitted by the City to be installed.

B. Definitions.

Applicable Codes. International building, fire, electrical, plumbing, or mechanical codes adopted by a recognized national code organization; and adopted by the City with local amendments.

City. The City of Idaho Falls, Idaho and its officers and employees.

City Park. An area that is zoned or otherwise designated by the City as a public park for the purpose of recreational activity.

Collocate or collocation. The installation, mounting, maintenance, modification, operation, or replacement of SWF in a City-owned or City-controlled public ROW on or adjacent to a pole.

Concealment, decorated or camouflaged. Any SWF or Pole that is covered, blended, painted, wrapped, disguised, camouflaged or otherwise concealed or decorated such the SWF blends into the surrounding environment and is visually unobtrusive as allowed as a condition for City approval. Camouflage may consist of but not limited to; hidden beneath a façade, blended with surrounding area design, painted to match the supporting area, or disguised with artificial tree branches.

Decorative pole. A pole specially designed and placed for aesthetic purposes.

Design District. An area that is zoned, or otherwise designated by the City and for which the City maintains and enforces unique design and aesthetic standards on a uniform and nondiscriminatory basis.

Downtown District. The portion in the City's downtown area that is identified as having historic or aesthetic preservation or enhancement needs by the Zoning Code.

Easement. Includes any public easement or other compatible use created by dedication, or by other means, to the City for public utility purposes or any other purpose.

Highway ROW. ROW adjacent to a state or federal highway.

Historic District. An area that is zoned or otherwise designated as a historic district under City, state or federal code.

Hydroelectric Project. All hydroelectric facilities and lands within the FERC licensed boundaries of Project 2842 the Idaho Falls Project and Project 2952 the Gem State Project.

Local. Within the geographical boundaries of the City.

Location City approved and lawfully permitted location for the SWF.

Macro tower. A guyed or self-supported pole or monopole greater in height than standard street light poles or traffic signal masts.

Small Wireless Facility (SWF). As defined by City Zoning Code-

Network Provider or Provider. A wireless service provider or a person that does not provide wireless services and that is not an electric utility but builds or installs on behalf of a wireless service provider. a SWF

License. A written authorization for the use of the public ROW or collocation on a service pole required from the City before a network provider may perform an action or initiate, continue, or complete a project over which the City has police power.

Pole. A service pole, municipally owned utility pole, or SWF Support Pole. Poles that have conductor energized at 44kV or higher are excluded from this definition.

Private easement. An easement or other real property right that is only for the benefit of the grantor and grantee and their successors and assigns.

Public Right-of-Way or Rights of Way (ROW). The area on, below, or above a public roadway, highway, street, public sidewalk, alley, waterway, or utility easement in which the City has an ownership interest or controls through contractual means. The term does not include a private easement or the airwaves above a public ROW, with regard to wireless telecommunications.

Service pole. A pole, other than a municipally owned utility pole, owned or operated by the City and located in a public ROW, including: a pole that supports traffic control functions, a structure for signage, a pole that supports lighting (other than a decorative pole); and a pole or similar structure owned or operated by the City and supporting only SWF

Traffic Signal. Any device, whether manually, electrically, or mechanically operated by which traffic is alternately directed to stop and proceed.

Wireless service. Any service, using licensed or unlicensed wireless spectrum, including the use of Wi-Fi, whether at a fixed location or mobile, provided to the public using a SWF

Wireless service provider. A person or company that provides wireless service to the public.

C. Locations of Wireless Facilities and Related Ground Equipment.

1. Most Preferable Locations

   a) Public Right-of-Way

   b) Industrial Areas

   c) Retail and Commercial areas

2. Less Preferable Locations

   a) Historic, Design, and Downtown Districts

      Any area designated by the City as a Historic, Design, or Downtown District will be subject to aesthetic requirements such as Camouflage at the nondiscriminatory discretion of the City.

   b) Municipal Parks

      ROW located in or adjacent to a street or thoroughfare that is adjacent to a municipal park or undeveloped land that is designated for a future park by zoning

3. Prohibited or Restricted Areas for Certain Wireless facilities, except with Separate City Agreement or Subject or Concealment Conditions.

   a) Residential Areas

      ROW that is adjacent to lots or undeveloped land that is designated for residential use by zoning.

      If a SWF is installed in a residential area it shall not be placed in public-utility-easement located outside of the platted ROW.

4. Historic, Design, and Downtown Districts.

   a) As a condition for approval of SWF in Historic, Design and Downtown Districts, the City shall require reasonable design decoration, Camouflage, or Concealment measures for the SWF. The City requests that a Network Provider explore the feasibility of using concealment, decoration, wrapping, or Camouflage measures to improve the aesthetics of the SWF, or related ground equipment, or any portion of the nodes, poles, or equipment, to minimize visual impacts.

   b) Network Provider shall comply with and observe all applicable City, State, and Federal historic preservation laws and requirements.

   c) Each license application shall disclose if it is within a District with Decorative Poles or in an area of the City zoned or otherwise designated as a Historic, Design or Downtown District.

5. Historic Landmarks

   a) A Network Provider is discouraged from installing a SWF within three hundred feet (300”) of a historic site or structure or Historic Landmark recognized by the City, state or federal government. It is advised that each license application disclose if it is within three hundred feet (300”) of such a structure.

6. Undergrounding Requirements

   a) A Network Provider shall comply with nondiscriminatory undergrounding requirements, including City ordinances, zoning regulations, state law, private deed restrictions, and other public or private restrictions, that prohibit installing aboveground structures in a ROW without first obtaining zoning or land use approval.

   b) Areas may be designated from time to time by the City as Underground Requirement Areas in accordance with filed plats and or conversions of overhead to underground areas, as may be allowed by law.

   c) Each license application shall disclose if it is within an area that has undergrounding requirements.

7. Exceptions

   The City at its sole, undiscriminatory, discretion may grant exception to the above prohibited locations and sizes.

D. Order of Preference regarding SWF attachment to existing facilities and SWF Support Poles.

1. The preference is for all electronics except the antennae to be located in a ground mounted cabinet located behind existing walkways.
2. Existing non-decorative street light poles
3. Traffic signal structures when such installation will not interfere with the integrity of the SWF and will not interfere with the safety of the public.
4. New SWF poles located in non-residential areas at signalized intersections.
5. Ground Equipment should be minimal and the least intrusive alternative.

E. Guidelines on Placement

1. Generally, Network Provider shall construct and maintain SWF and SWF Support Poles in a Manner that does not:
   a) Obstruct, impede, or hinder the usual travel or public safety on a public ROW;
   b) Obstruct the legal use of a public ROW by other utility providers;
   c) Violate nondiscriminatory applicable codes;
   d) Violate or conflict with the City's publicly disclosed public ROW management policies or zoning ordinances;
   e) Violate the ADA; or.
   f) Violate City noise or nuisance standards
2. Licensing.
   a) As defined in City Code, Idaho Falls Service Policy, City Design Criteria, and a Master License Agreement with each Network Provider or carrier.
   b) All new equipment placed in the ROW shall require a ROW permit. This permit will ensure review of traffic and pedestrian safety and to review potential impacts from planned construction projects.
3. SWF facilities placement.
   a) ROW. SWFs with related ground equipment shall be placed, as much as possible within two feet (2') at the outer edge of the ROW line to minimize any obstruction, impediment to the usual travel or public safety on a ROW.
   b) Height above ground: SWF attachments to a pole shall be installed at least

eight feet (8') above the ground, and if a SWF attachment is projecting toward the street, the attachment shall be installed no less than sixteen feet (16') above the ground.

c) SWF Spacing: SWFs shall be no closer to another SWF than a minimum of three hundred feet (300'), unless by Conditional Use Permit.

d) Installations on Traffic Signals: Installation on traffic signal structures must:

(1) Be encased in a separate conduit than the traffic light electronics,
(2) Have a separate electric power connection than the structure,
(3) Have a separate access point than the structure, and
(4) Be clear of any current or potential attachment of traffic control devices (signal and signs) and ancillary devices (detection, preemption, surveillance, etc.) and not constitute a violation of the Manual on Uniform Traffic Control Devices (MUTCD).
(5) SWFs will not be ~~allow~~allowed on any sign post located in the ROW.

4. New SWF Support Poles.

a) All new poles must be selected from the current Idaho Falls Power list of acceptable poles by Valmont or approved equivalent.

X. JOINT USE ATTACHMENT CONSTRUCTION STANDARDS AND POLICY

A. Purpose.

1. To provide consistent construction standards for joint use attachments on IFP structures.

B. Application Procedures

1. Any communication provider ("Provider") desiring to attach to IFP poles must first have an executed Joint Use Agreement with IFP.

2. Prior to any attachment to IFP poles, Providers desiring joint use must turn in an application to IFP. No attachments to any of IFP poles shall occur until IFP has approved a Permit for such attachments.

3. Permits are required for any overlashing. Provider, Provider's affiliates, or other third party as applicable shall pay any necessary make-ready work costs to accommodate such overlashing.

C. Make-Ready Work

1. It is the Provider's responsibility to advise IFP of any ~~-~~required make-ready work.

2. The Provider will be required to pay for all make-ready work. This payment may be required in advance of any IFP work.

D. All pole attachments shall be made in accordance with the most current version of the

following standards, as applicable:

1. National Electric Safety Code ("NESC")
2. National Electrical Code ("NEC')
3. Regulations of the Occupational Safety and Health Administration ("OSHA").
4. Service Policy Figures 18-23.

E. Position and space

1. The top communication position on all IFP poles is reserved for City of Idaho Falls, IFP, and IFF communication equipment, solely as determined by IFP.
2. A position generally ~~consist~~consists of twelve inches (12") of pole space.
3. Providers are permitted no more than one (1) attachment per pole without express written IFP approval.
4. A communication cross arm may be installed when vertical space on the pole is or may be limited, solely as determined by IFP. A communication cross arm is recommended when there are three (3) or more communication lines attached to a pole or as vertical clearance from ground would reasonably require.

F. Clearances

1. Minimum separation between electric service drops and communication service drops shall be twelve inches (12"), per NESC 235C1b (exception 3).
2. Minimum mid-span vertical separation between communication cables shall be six inches (6").

G. Vertical Risers

1. Unless otherwise directed by IFP, all risers, including those providing 120/240 volt power for communications equipment enclosure, shall be placed on the quarter faces of the pole and must be installed in sealed conduit on stand-off brackets. A ~~two inch~~two-inch (2") clearance in any direction from cable, bolts, clamps, metal supports, and other equipment shall be maintained.

H. Climbing Space

1. A clear climbing space must be maintained at all times on the face of the pole. All attachments must be placed to allow and maintain a clear and proper climbing space on the face of IFP's poles. Communication cable/wire attachments shall be placed on the same side of the pole as those of other attaching entities.

I. Anchors and Down Guys

1. No attachment may be installed on an IFP pole until all required guys and

anchors are installed. No attachment may be modified, added to, or relocated in such a way as is likely to materially increase the stress or loading on IFP poles until all required guys and anchors are installed. Placing pulling strain on IFP poles prior to supporting the pole is cause to immediately stop work.

2. Providers shall be responsible for procuring and installing all anchors and guy wires to support the additional stress placed on IFP poles joint use facilities attachments. Anchors shall be guyed adequately. Anchors and guy wires shall be installed on each IFP pole where an angle or a dead-end occurs with guy attachments to poles at or below its cable/wire attachment.

3. Providers shall not attach guy wires to the anchors of IFP or any third-party user without the anchor owner's specific prior written consent.

4. Any down guys, if needed, shall be bonded, to the vertical ground wires of IFP's pole where a ground wire is available.

J. Service Drops

1. Aerial service drops shall not be attached directly to the pole. Aerial service drops shall be attached to the messenger a minimum of six inches (6") from the pole.

K. Tagging

1. All communications cables shall be identified with a band-type cable tag or other identification acceptable to IFP at each attachment within twelve inches (12") of the pole. The tag shall be consistent with industry standards, and shall include, at minimum, the following: cable owners name, which can be read by observation from the ground.

L. Pole Removal

1. In the event a pole is abandoned or replaced, the last party attached to a pole shall be responsible for removal, disposal, and liability of such pole

M. Nonfunctional Attachments

1. Providers shall remove any nonfunctional attachments within one (1) year of the attachment becoming nonfunctional.

SERVICE POLICY

Effective 2022

This Policy provides information on the Idaho Falls Power (IFP) procedures for new and existing services and what will be required of a Customer desiring electric service. This Policy is based in part on current Idaho Falls City Code. It is to be used only as a guide and shall not be considered to be complete with respect to all possible service configurations or special or extenuating circumstances. Questions pertaining to this Policy should be directed to the Engineering Manager, or the Distribution Superintendent at (208) 612-8430. **Any deviations from this Policy must receive prior IFP written approval.**

Changes new to this edition:

1. Added note that free draining aggregate must be in fiber junction box. Note 4 in Fig. 7

2. Added statement for the standard markings for meter sockets and their corresponding units and verifications required. Section V.I.1

3. Added the option to use 1.25” continuous duct fiber conduit. Section III.D.1

4. Clarification on bolt lengths on the light pole foundations. Fig.10

5. Added that all future use needs 2x4 marking and must be capped. Section III.D.3

6. Added fiber ONT recommendations when it comes up on the house. Fig 33

7. Trailer parks are no longer commercial. Deleted from Section I (Definitions)

Table of Contents

I. DEFINITIONS: 6
II. SERVICE REQUIREMENTS 8
A. General Service Requirements: 8
B. Commercial Service Requirements 9
C. Commercial Service Requirements for Operation 10
D. Residential Service Requirements 10
E. Multi-Family Service Requirements 12
F. Construction and Temporary Service 12
G. Requesting Changes to Existing Services (service upgrades) 13
H. Illumination of Public Rights-of-Ways 13
I. Required Conductor Clearances 14
J. Fault Current Calculations 14
III. TRENCH AND CONDUIT 17
A. General Requirements 17
B. Primary Conduit 18
C. Secondary Conduits 19
D. Future Use Conduits 21
IV. PADMOUNT EQUIPMENT REQUIREMENTS 21
A. Single-Phase Transformers 21
B. Three-Phase Transformers 22
C. Sectionalizing Cabinets, Ground Sleeves, Secondary Pedestals, and Fiber Boxes 22
D. Modifying Exterior Appearance of Equipment 23
V. GENERAL METERING REQUIREMENTS 23
A. Location of Meters 23
B. Meter/Point of Service Disconnect 24
C. Determining Self-Contained or CT Metering 24
D. Residential Metering Requirements 24
E. Commercial Metering Requirements 24
F. Meter Bases 27
G. Installation of Meters 28

H. Removal of Meters 28
I. Meter Identification 28
J. Master Metering 29
VI. SECURITY LIGHTING 30
A. Program Requirements 30
VII. CUSTOMER GENERATION 30
A. Generation Facility Design and Installation Requirements 30
B. Generation Facility Design Specifications: 30
C. Generation Facility Net-Metering and Power Purchases 33
VIII. ELECTRIC VEHICLE CHARGING STATION PROGRAM REQUIREMENTS 34
A. Electric Vehicle Charging Station Installation 34
IX. SMALL WIRELESS FACILITIES 37
A. Purpose. 37
B. Definitions. 37
C. Locations of Wireless Facilities and Related Ground Equipment. 39
D. Order of Preference regarding SWF attachment to existing facilities and SWF Support Poles. 40
E. Guidelines on Placement 40
X. JOINT USE ATTACHMENT CONSTRUCTION STANDARDS AND POLICY 42
A. Purpose. 42
B. Application Procedures 42
C. Make-Ready Work 42
D. All pole attachments shall be made in accordance with the most current version of the following standards, as applicable: 42
E. Position and space 42
F. Clearances 43
G. Vertical Risers 43
H. Climbing Space 43
I. Anchors and Down Guys 43
J. Service Drops 43
K. Tagging 44
L. Pole Removal 44
M. Nonfunctional Attachments 44

I. DEFINITIONS:

CHARGING STATION: IFP-supplied equipment that is leased to a customer for the purpose of charging electrically powered vehicles.

CITY: City of Idaho Falls, Idaho.

COMMERCIAL: Development that is non-residential or, for the purpose of construction and maintenance of the electric infrastructure, a development that is Multi-Family Housing with three or more attached units with a meter pack (master-metered). (See International building code for more information about the commercial classification)

CONTRACTOR: Any person or entity who is doing work that will require electric service or other interaction from IFP. Contractor is a general term that can apply to one (1) or more property developer, owner, owners' agent, or other entity performing work at location.

CT METER: A metering system where the current is measured indirectly with a current transformer.

CUSTOMER: The person(s) who will be the owner(s) of the property where the service is provided and who shall be responsible for the ongoing costs of maintenance and service.

CUSTOMER-GENERATOR: A customer with a small generation facility (solar, wind, etc.) who has a net-metering agreement with IFP.

GENERATION EQUIPMENT: Equipment (solar panels, small wind, gas-generators, etc.) used in the generation of electricity.

ISPWC: Idaho Standards for Public Works Construction

IFP: The City of Idaho Falls, Idaho, dba Idaho Falls Power.

INFILL LOTS: Platted or unplatted property left after development has been complete or that have been developed in the past and the structures have since been removed that may be subject to line extension fees.

MASTER-METERED: One (1) meter that measures the electrical service for more than one (1) living unit or commercial interest.

MOBILE HOME PARK: Development that has three or more stand-alone residential units built on parcel(s) under common ownership, wired to HUD standards, and typically mobile homes where each unit has a self-supported meter base, or that is master metered. NESC: National Electric Safety Code, which is the governing standards for electric utilities.

NET ENERGY: The difference between the electricity consumed by the Customer-Generator and the electricity produced by the Customer-Generator's Generation equipment and facility.

NET-METERING: A system in which a small generation facility, (e.g., renewable energy

generators), are connected to the power grid and surplus power is transferred onto the grid, allowing customers to offset the cost of power drawn from IFP.

PRIMARY: The parts of the IFP system that are operated at a nominal 15kv phase-phase. Actual operating voltages are 12,400 volts phase-phase and 7,200 volts phase-ground.

RESIDENTIAL: Single Family Home (independent meter attached to a wall), Multi-Family Housing (two units with a meter pack or master-metered), and Single Family Attached (individual service to each house with meter attached to the individual house).

SECONDARY: The parts of the IFP system that are operated below 600 volts.

SELF-CONTAINED METER: A non-instrumented single-phase meter under four hundred (400) amps (class 320) or a three- (3) phase meter under two hundred (200) amps.

II. SERVICE REQUIREMENTS

SERVICE FEES: CONSISTENT WITH IDAHO FALLS CITY CODE, ALL FEES OR COSTS, APPLICABLE TO LINE EXTENSIONS FOR RESIDENTIAL OR COMMERCIAL INDIVIDUAL CUSTOMERS OR DEVELOPMENTS SHALL BE PAID IN ADVANCE OF ANY INSTALLATION OF ELECTRICAL INFRASTRUCTURE. APPLICABLE FEES ARE PUBLISHED IN THE FEE SCHEDULE ESTABLISHED BY CITY COUNCIL RESOLUTION.

A. General Service Requirements:

1. A Customer desiring new electric service from IFP must first secure a building permit from the City Building Department. For all three-phase and commercial projects, it is required that the Customer coordinate service plans directly with IFP prior to seeking a building permit. The Customer shall provide a completed transformer load sheet and information necessary for IFP to provide electrical service, including but not necessarily limited to: preferred service location (overhead or underground service), single-phase or three-phase service, total connected load, electric heat and air conditioning load, required voltage, and the number and size of motors with ratings greater than ten (10) horsepower.

2. The International Building Code and International Residential Code determines if a building is commercial verses residential for the purpose of construction and maintenance of the electric infrastructure. Power consumption charges and line extension fees are based on the occupancy type and are listed in The Fee Schedule Established by City Council Resolution.

3. The Customer is solely responsible for the selection, installation, and maintenance of all electrical equipment and wiring, on the load side of the point of delivery (other than IFP's meters and apparatus). The Customer shall be responsible to provide adequate protective measures for all electric motor installations.

4. The Customer shall be responsible to install and maintain surge suppressors, auxiliary power units or other protective devices for the protection of computers, computer software and programming, televisions, or other equipment sensitive to voltage spikes, surges, sags, transients, noise interruptions or outages.

5. The Customer shall install and maintain all suitable protective devices and equipment to protect the Customer, life and/or property, from harm or injury from electric current because IFP shall assume no duty to warn or to otherwise assist the Customer in the selection of or use of electrical appliances, tools, equipment, or facilities.

6. Whenever a Customer's equipment has characteristics which causes interference (e.g., harmonics, transients, waveform distortions, fluctuations, etc.) with IFP's

service to other Customers, the Customer causing the interference shall make changes in such equipment or provide, at Customer's expense, additional equipment to eliminate the interference. Power quality of the Customer shall meet the IEEE 519 standard, ANSI C84.1 standard, and City Code 8-5-26.

7. Padmounted equipment (including ground sleeves / pedestals, etc.) shall not be provided or set until curb and gutter have been installed. Approval from IFP is required prior to any deviation from this requirement.

8. IFP's required easements for the electric and fiber lines shall be identified and designated prior to construction. In general, easements for electric and fiber service shall be twelve feet (12') in width. Along rights-of-way (ROW) easements shall be a minimum of fifteen feet (15'). Proposed easement width may vary depending on road classifications and IFP future planning needs.

9. New utility easements of less than twelve feet (12') in width require prior approval from IFP design staff. It is the Customer's responsibility to have IFP's designated easements surveyed and dedicated to the City.

B. Commercial Service Requirements

1. Commercial services are defined as Non-residential and Multi-Family Housing that has three or more units attached with a meter pack (see International Building Code). Exceptions on case-by-case basis shall be coordinated by IFP and Building Department.

2. Prior to design, every commercial and industrial Customer shall provide the following information to IFP:

   a) A plot plan indicating the preferred service entrance location

   b) If previously recorded public utility easements or are not available, provide easements to IFP for underground power cable, as indicated on the marked-up plot plan described above. If the indicated easement locations present problems, the Contractor is responsible to obtain permission for a different routing from IFP.

   c) Proposed transformer location (final determination will be made by IFP)

   d) A completed transformer load sheet (attached to review sheet or by pdf from IFP design)

   e) All electrical requirements including number of phases, voltage, connected single-phase and three-phase loads.

   f) Determine location of loads, approximate size of loads and possible future load needs. All three-phase underground installations shall be served with Y connected secondary only (i.e. 120/208 or 277/480).

   g) No service work, cable pulls, or connects will be made unless the site address

is posted in a conspicuous place.

3. Determine location of service entrance, approximate size of loads, and an estimate of future electric loads

4. Provide a meter base, standard power riser, weather head, and/or suitably anchored attachment point to allow connection to IFP's designated service tap point. Install IFP provided CTs

5. Provide necessary easements to connect the Customer to IFP's designated interconnection point. Easements are required for primary conductor only, except in rare cases where an easement for overhead secondary conductor may be necessary (because it crosses property boundaries).

6. IFP will then provide the meter and current transformers and aerial overhead conductor. Note that no Customer owned equipment will be permitted on IFP's poles.

7. Contractor / Customer is required to provide and install all secondary conductor and to ensure adequate coil at each end for IFP to terminate.

C. Commercial Service Requirements for Operation

1. The Customer is solely responsible for the selection, installation, and maintenance of all electrical equipment and wiring, on the load side of the point of delivery (other than IFP's meters and apparatus). The Customer shall be responsible to provide adequate protective measures for all electric motor installations.

2. The Customer shall be responsible to install and maintain surge suppressors, auxiliary power units or other protective devices for the protection of computers, computer software and programming, televisions, or other equipment sensitive to voltage spikes, surges, sags, transients, noise interruptions or outages.

3. The Customer shall install and maintain all suitable protective devices and equipment to protect the Customer, life and/or property, from harm or injury from electric current because IFP shall assume no duty to warn or to otherwise assist the Customer in the selection of or use of electrical appliances, tools, equipment, or facilities.

4. Whenever a Customer's equipment has characteristics which causes interference (e.g., harmonics, transients, waveform distortions, fluctuations, etc.) with IFP's service to other Customers, the Customer causing the interference shall make changes in such equipment or provide, at Customer's expense, additional equipment to eliminate the interference. Power quality of the Customer shall meet the IEEE 519 standard, ANSI C84.1 standard, and City Code 8-5-26.

D. Residential Service Requirements

1. Residential services are defined as a Single Family Home, Multi-Family Housing

(two units with a meter pack), and Single Family Attached (individual service to each house with meter attached to the individual house).

2. Line extension fees will be established by Resolution of the City Council. Additional clarification for infill lots are as follows:

   a) Infill lots that were planned with services and that have adequate IFP infrastructure are not subject to the per lot fee or other line extension fees. If it is determined that the infrastructure needs upgraded to serve than this will be billed as an extra line extension fee.

   b) Infill lots that were not planned as a residential lot are subject to the per lot fee.

   c) Infill lots that have no IFP power infrastructure fronting or adjacent to the property are subject to the per lot fee plus all other applicable line extension fees to provide power to the property as determined by IFP.

3. New underground residential electric systems shall be installed in front lot locations and shall be determined by IFP. See Section III for trenching and conduit requirements.

4. Service Entrance and Meter Base:

   a) The meter shall be located within five feet (5') of the nearest front corner of the house to the existing transformer or pedestal. Conduit is to have a maximum of 360° degree of bends. Services shall conform to Attached Figures of this Policy. Meter location requirements herein are to be used only as a guide and shall not be considered complete with respect to all possible service configurations or special extenuating circumstances. Any deviation of meter placement must have prior, written approval from IFP. The centerline of the meter should be five feet six inches (5'6") above the finished grade or walkway. If structural details prevent this, the centerline height shall be not less than four feet (4') or more than six feet (6').

5. Power Cables:

   a) IFP will provide and install the necessary primary cable. IFP will provide and install the necessary secondary cable for services up to three hundred (300) amps.

   b) The cables will be installed in the Contractor provided conduit to connect the Contractors' service point to the City's pad-mounted transformer or pedestal. The Contractor is required to establish a final grade compacted to a minimum of ninety-five percent (95%) of maximum density at each transformer and service pedestal on location large enough for placement of IFP's transformer pad and/or pedestal. See Attached Figures of this Policy. The Contractor should coordinate work with IFP.

c) The Contractor's service entrance equipment must be in place and approved by the electrical inspector before final hookup. Installed conduit shall be inspected by IFP to ensure proper conduit depth and installation. Cable will not be installed until the trench has been backfilled.

6. High Voltage Transformers and Sectionalizing Cabinets:

a) The high voltage equipment shall not be enclosed in any manner which will restrict the dissipation of heat. A ten foot (10') minimum clearance and access must be maintained in front of the cabinet door. A two-foot (2') clearance should be maintained on all other sides of the equipment. Fences or landscaping installed within this clearance will be removed at the Customer's expense should servicing be required. See Attached Figures of this Policy.

b) Additionally, overhead service wire length has a maximum length of one hundred twenty-five feet (125').

E. Multi-Family Service Requirements

1. Conduits and conductors used to service the building will be determined by IFP for Residential only (up to two units with a meter pack). For Commercial applications (three units or more with a meter pack) conduits and conductors will be determined and provided by the Contractor/Customer. See Section III for trenching and conduit requirements. Secondary conductor(s) will be terminated at one (1) point Customer's premises (i.e., main breaker, disconnect or similar tap point). IFP's conductor(s) shall not be used as a bus in gutters, etc.

2. A Contractor / Developer can install a meter pack as an alternative to individual meters on individual walls. Conduits and conductors can penetrate the firewall on Single Family Attached dwellings (see building regulations and coordinate with Building Department). Easements and agreements will need to be in place between each Property Owner / Home owner's association. Contractor / Owner shall communicate to IFP the type of construction when requesting approval.

3. Line extension fees are based on occupancy and will be established by Council Resolution. Multi-Family Housing line extension fees are only applicable when there is a meter pack of three (3) or more units.

F. Construction and Temporary Service

1. IFP will charge a fee for the installation and removal of power for a temporary facility to existing infrastructure (e.g., within thirty feet (30') of underground or one hundred twenty-five feet (125') from overhead tap point). This fee will be established by Resolution of the City Council and shall be paid at the City Building Department at the time of building permit application. Due to varied field conditions, the Contractor or Customer will need to coordinate a site visit with IFP staff at (208)612-8430 to determine installation requirements. If providing the service requires pole installation or transformer placement, an

additional one-time fee shall be paid to IFP prior to the installation of the temporary service. Temporary Service request forms with current associated fees are available at the Building Department.

2. Examples of temporary facilities include a construction trailer or Christmas tree lot, which would require a line extension and/or transformer. Temporary power service shall be limited to three (3) months post completion for construction projects or to one (1) year of continuous service for non-construction services.

3. The Contractor or Customer must provide service pole and meter base, and have it approved by the City's electrical inspector. The service pole cannot be more than one hundred twenty-five feet (125') from the designated IFP interconnection point. The service pole shall be tall enough to allow for appropriate traffic clearance and be strong enough to support the service conductors.

G. Requesting Changes to Existing Services (service upgrades)

1. Any Customer may request a change to an existing service, including upgrades, expansion, extension or relocation. Customers requesting change in existing service shall pay labor and materials costs associated with the service change. All payments will be made in advance of the change in service. Residential service upgrades must comport to City Code 10-3-5(Z)(8) for zoning. Primarily, the use of utilities shall not be beyond that reasonably used for residential services, e.g. cryptocurrency mining would not be considered a residential use.

2. The Contractor or Customer shall be responsible for costs incurred by IFP for the repair of any of its facilities damaged by the Contractor or Customer or a third party working on behalf of the Contractor or Customer. IFP will provide information and services in advance of maintenance or construction activities (such as dropping and reconnecting overhead service lines for tree trimming) at no charge, if scheduled during regular business hours.

H. Illumination of Public Rights-of-Ways

1. It shall be the Customer or Contractor's responsibility to provide illumination (street lights) along or within the public rights-of-way contained within a new development.

   a) IFP will coordinate with the Developer regarding design and construction responsibilities for lighting.

      (1) When determined by IFP, Contractor to utilize flood seals and compact compression connector Burndy YPC2A8U bg die or w-bg die; or approved equal for all connector taps.

2. All new light pole foundations and lighting conduits shall be constructed by the Contractor in accordance with current Service Policy Figure 10, ISPWC (Idaho Standards for Public Works Construction), and City of Idaho Falls standard

specifications. IFP will furnish to the Contractor a bolt hole template (pending availability), anchor bolts, nuts, washers, grounding butt plate, and ground wire needed for the installation of the light poles. Contractor may utilize a precast light pole base as long as it matches all specifications.

a) The Customer shall purchase or construct a concrete light pole base per current IFP specifications in the location indicated on the IFP Contractor Map. The final light pole location will be determined by IFP. If the Customer chooses to pour in place the pole base, IFP must be contacted for inspection of pole base prior to the base being poured. Light Pole base shall conform to Attached Figures of this Policy. A light pole will not be installed on the pole foundation until it has cured a minimum of seven (7) days. When the temperature is forty (40º) degrees or lower the pole foundation shall be covered with an insulated tarp.

3. Contractor to ensure adequate backfill at proposed light pole bases and utilize ¾" gravel to maximize compaction.

4. IFP will install poles and luminaires along or within the public rights-of-way with the cost of materials paid by the Contractor prior to installation, except in the commercial applications described above.

I. Required Conductor Clearances

1. See Service Policy Figures for required clearances of overhead power lines to driveways, parking lots, alleys, areas of farm and construction equipment, pedestrian traffic, vehicular traffic, railroads, water ways, and other miscellaneous clearance exhibits. If the clearance is not shown, please contact IFP staff. Note all clearances are derived from the NESC.

2. Contact IFP at (208) 612-8430 for permits, inspections, authorizations, and clearances not addressed in this Policy.

J. Fault Current Calculations

1. The NEC requires that new service entrance equipment is rated to interrupt the available fault current. To assist customers, IFP is providing the tables below showing a calculated maximum potential secondary fault current (Isc) and the information necessary to allow the calculations of the maximum fault current for most applications.

2. The tables are built with the following assumptions:

a) The tables do not use an infinite buss but the maximum primary fault current of IFP's system which is 8000 amps.

b) The tables were developed with a minimal 15 feet of secondary conductor (wire) is installed from the transformer. For a more accurate calculation the

customer can use the actual length of conductor and actual conductor size. Calculating tools such as Eaton Bussmann's FC^2 application can be used.

3-Phase Padmount Transformers					
Transformer KVA	Secondary Voltage L-L	Secondary Voltage L-N	Lowest %Z	Isc w/ 15ft Wire	Wire Size
45	208	120	2.8	4216	4/0
75	208	120	0.9	17773	4/0
75	480	277	1.3	6508	4/0
112.5	208	120	1.2	22129	1-500
112.5	480	277	1.9	6668	4/0
150	208	120	1.1	30138	1-500
150	480	277	1.2	13147	4/0
225	208	120	1.5	35161	2-500
225	480	277	1.4	17074	1-500
300	208	120	1.4	48886	3-500
300	480	277	1.3	23330	1-500
500	208	120	1.5	71114	4-500
500	480	277	1.5	32504	2-500
750	208	120	5.4	34719	6-500
750	480	277	3	25812	3-500
1000	208	120	5.8	42437	8-500
1000	480	277	5.5	19591	4-500
1500	480	277	5.6	27583	5-500
2000	480	277	5.6	35237	7-500
2500	480	277	5.5	42818	8-500

1-Phase Padmount Transformers					
Transformer KVA	Secondary Voltage L-L	Secondary Voltage L-N	Lowest %Z	15ft 1/0 AL Isc L-L	15ft 1/0 AL Isc L-N
15	240	120	1.1	5008	6192
25	240	120	1	8355	9246
37.5	240	120	1.6	7931	8895
50	240	120	1	13950	13131
75	240	120	2.4	9952	10487
100	240	120	1.3	18221	15395
167	240	120	1.8	20181	16286
1-Phase Polemount Transformers					
Transformer KVA	Secondary Voltage L-L	Secondary Voltage L-N	Lowest %Z	15ft #2AL Isc L-L	15ft #2AL Isc L-N
15	240	120	1.1	4721	5382
25	240	120	1	7585	7549
37.5	240	120	1.6	7234	7314
50	240	120	1	11928	9954
75	240	120	2.4	8878	8357
100	240	120	1.3	14917	11202
167	240	120	1.8	16206	11667

III. TRENCH AND CONDUIT

A. General Requirements

1. Please contact the applicable IFP Design staff as noted on the approval drawings or through the main IFP engineering office at (208) 612-8430 prior to starting any trench and conduit work.

2. IFP requires all IFP-owned conductor to be in conduit. The Customer shall provide and install all conduits as required from the IFP identified interconnection location through new or existing easements to the Customer's transformer pad as set out in Section 2.A.1 of this Policy. In the event it is necessary for IFP to loop feed through the Customer's property, the Customer may be required to open an additional trench to place conduit from the transformer to an exit point from the Customer's property. The Customer may also be required to provide easements for the trench. All electric conduits shall be PVC Schedule 40 (see note 3 and 4 for exceptions). All elbows shall be PVC Schedule 40 large radius sweep (36") or as otherwise specified by IFP (see note 3 and 4 for exceptions). RGS elbows and conduit must be used at riser poles or where conduit will be exposed out of the ground. Conduits must be capped and labeled to identify routing. No conduit run shall have more than 360 degrees of bends. Maximum lengths of conduit runs shall be determined by IFP. Conduit shall only be bent with approved methods (i.e., blanket warmer or rigid conduit bender). No torches allowed.

3. 2" HDPE SDR 13.5 continuous duct can be utilized by the Contractor instead of 2 ½" PVC Schedule 40 as specified on the Contractor Map for proposed 1/0 single phase primary conductor. Conduit to be red in color or black with red stripes (red conduit preferred). If possible HDPE to be ordered with "IFP" stamped on conduit. The HDPE can be turned up inside of ground sleeves and secondary pedestals or Contractor may transition to 2" PVC Schedule 40 large radius sweep (36") with Perma-Guard/UL fittings by Arnco Shur-Lock II or approved equal by IFP.

4. On all conduit runs of 75 feet or greater and all services from the meter base to the transformer / secondary pedestal; the contractor will install 2500 lb. "mule tape". When available, and only if requested, IFP will provide used mule tape.

5. Contractor will install pull string for fiber optic conduit runs (future use conduit).

6. Developer / Contractor shall provide all construction staking and layout of new electrical facilities per design.

7. All conduit, including bell ends, shall be supplied and installed by the Contractor. Bell ends shall be installed at transformers, secondary pedestals, sectionalizing cabinets, and light pole locations. See attached Figures of this Policy for

installation guidelines. Conduits must be capped and labeled to identify routing.

B. Primary Conduit

1. The minimum power trench shall have a minimum depth of fifty-four inches (54”) and maximum depth of sixty inches (60”) below finish grade (Conduit to be installed 48” below finish grade). Including 6” of sand bedding below and above top of conduits. See below for bedding requirements. Minimum trench width shall be twenty-four inches (24"), unless otherwise noted. Before final backfill, IFP shall be notified when the conduit is in place. IFP will inspect all conduit installations before backfilling for proper depth and installation. Trench to be backfilled within two weeks of IFP conduit installation. Failure to obtain an inspection prior to backfill may result in the re-excavation of the trench.

2. Minimum primary conduit depth can be reduced to eighteen inches (18") of cover below final grade through basalt or other rock upon prior approval of IFP. Rigid galvanized steel (RGS) conduit shall be provided and installed by the Contractor where trench depth is less than forty-eight inches (48"). IFP will specify the conduit size.

3. IFP will specify the conduit size. Contact applicable IFP staff upon completion of pulling a mandrel through the conduit to ensure the conduit is free from obstructions. Any additional or future costs due to broken, damaged, obstructed or poorly assembled conduits will be paid by the Customer.

4. IFP will provide the pole and all primary conductors, if crossing existing streets with overhead primary conductor to a pole located near the new service location. The Contractor shall provide and install the first length (i.e. ten feet (10’) of RGS conduit) up the pole above the contractor supplied RGS elbow. All elbows at the base of the pole shall be a large radius three-foot (3’) RGS steel. All conduits installed on IFP poles will be on approximately eight-inch (8”) standoffs.

5. If an underground road crossing is made, the Contractor will provide all conduit and will bore conduit beneath the roadway or provide a trench in which to install conduit. The use of high density polyethylene (HDPE) continuous conduit shall be used at select road crossing locations with prior approval from IFP. Conduit shall be Perma-Guard/UL and fittings shall be Arnco Shur-Lock II or an approved equal approved by IFP. IFP will inspect all conduit installations before backfilling for proper depth and installation. Trenches across existing roadways must also be approved by the City Public Works Department.

6. A minimum of six inches (6”) of sand bedding is required above and below all conduits. An IFP staff may determine that the native soil is suitable for bedding material. Additionally, bury/caution tape shall be buried two feet (2’) above the top of conduit. IFP will inspect all conduit installations before backfilling for proper depth and installation. Prior to cable installation, trenches must be

backfilled and transformer and sectionalizing cabinet ground sleeves as well as secondary pedestals must be in place.

7. In all cases the Contractor shall be responsible for backfill and compaction of cable trenches and repair of street crossings. Per City standards, all electrical trenches shall be compacted to a minimum of ninety-five percent (95%) of maximum density to prevent settlement. Failure to properly repair the street wherein defects (e.g. settlement) appear within one (1) year will result in the City billing the responsible party for all costs incurred by the City to fix the roadway.

8. A minimum of one foot (1') clearance shall be maintained between primary high voltage cable and all other utilities and service voltage cables, except at crossings (where a separation should exist to allow future repairs of either utility approximately two inches (2") minimum).

C. Secondary Conduits

1. The trench for secondary conduit shall have a minimum depth of thirty inches (30") below final grade. Minimum trench width shall be twenty-four inches (24"), unless otherwise noted. Before final backfill, IFP shall be notified when the conduit is in place. IFP will inspect all conduit installations <u>before</u> backfilling for proper depth and installation. Trench to be backfilled within two weeks of IFP conduit installation. Failure to obtain an inspection prior to backfill may result in the re-excavation of the trench.

2. Minimum secondary conduit depth can be reduced to eighteen inches (18") of cover below final grade through basalt or other rock upon prior approval of IFP. Rigid galvanized steel (RGS) conduit shall be provided and installed by the Contractor where trench depth is less than thirty inches (30"). IFP will specify the conduit size.

3. IFP will specify the conduit size (exception: commercial secondary conduit). Contact applicable IFP staff upon completion of pulling a mandrel through the conduit to ensure the conduit is free from obstructions. Any additional or future costs due to broken, damaged, obstructed or poorly assembled conduits will be paid by the Customer.

4. The Customer provides, installs and retains ownership of all commercial secondary service conductors and conduits from building (or load) to transformer (or source).

5. When service can be met from an existing power pole, the Contractor shall install all secondary cable to the pole and shall provide sufficient secondary cable to reach from the pole top connection point to the Customer's meter base or other point of connection.

6. The Customer shall provide and install the first length (i.e. ten feet (10') RGS

conduit up the pole above the contractor supplied RGS elbow. All conduits installed on IFP poles will be on approximately eight inches (8") standoffs. Commercial secondary trench and cable are the Customer's responsibility, and no easements will be required by IFP. All future maintenance, locating, and repair of secondary shall be the Customer's responsibility.

7. Contractor shall provide and install necessary meter bases, current transformer (CT) boxes, and install IFP provided CTs in CT boxes. Commercial metering requirements are contained in Section V. of this Policy, with additional commercial metering requirements in Section V.E. of this Policy.

8. Following such installations, IFP will install meter, meter wiring, etc.; place a transformer on the concrete pad; pull primary cable through Contractor-installed conduit; and connect primary cables to the primary terminals of the pad-mounted transformer. IFP makes up secondary connections in the transformer and provides connectors for standard cable up to and including five hundred (500) kcm. If greater than five hundred (500) kcm cable is to be used, the Contractor provides connectors and/or other special facilities. Finally, IFP connects the primary cable to its power system at the designated tap point after all requirements are met.

9. Where the service is fed from an overhead transformer, the Contractor or Customer will install conduit to the pole where the transformer is mounted.

   a) The Contractor or Customer will install rigid galvanized, three- (3’) foot radius elbow and one (1) ten (10’) foot length of rigid galvanized steel conduit up the pole (for residential the size of conduit is to be determined in Contractor’s Map, for commercial the size is determined by Electrician).

   b) The Contractor or Customer will provide enough conductor to make connection to the transformer and coil it at the top of the end of the riser.

   c) IFP will inspect all conduit installations before backfilling for proper depth and installation. Meter base shall be framed and braced before the power cable will be pulled into the base. After IFP inspects conduit, an authorization for backfill sticker will be placed on conduit or meter base.

   d) All trenches will be compacted to a minimum of ninety-five percent (95%) of maximum density to prevent settlement.

   e) It shall be the property owner’s responsibility to maintain integrity of secondary conduit at their expense.

10. On residential secondary conduit extensions, IFP will provide transformer ground sleeves, ground rods, and secondary pedestals. Following IFP providing the ground sleeve and pedestal, and <u>before</u> transformer or service pedestal is installed, the Contractor shall install two ten-foot (10’) length of two and one-half inches (2½”) schedule 40 PVC secondary conduit with three foot radius (3’) sweep, if

required from each transformer and/or pedestal on approximately a 45° degree angle into each lot to be served with electrical service (unless otherwise noted on Contractor's Map). See Attached Figures of this Policy.

a) Contractor / Customer will connect to existing conduit stubs and extend to the house per Figure 32 of the attached Figures.

(1) Schedule forty (40) PVC conduit is acceptable for the riser and the two-foot (2') radius elbow at the house if mounted within the framed wall. If surface mounted on the house or self-supported-meter base, the riser to the meter base and adjacent elbow shall be RGS. Any exceptions to this shall be coordinated with IFP prior to construction.

b) Three-inch (3") conduit with three-foot radius (3') sweeps shall be required from pedestal or transformer to the meter panel if residential service has a 400 amp panel. Coordinate with IFP.

11. Any residential secondary service that is connected from another secondary service or has multiple services interconnecting (daisy chain) will be deemed Commercial. IFP will not be responsible nor maintain those services, unless prior approval by IFP.

D. Future Use Conduits

1. Contractor shall provide and install two-inch (2") future use conduit (fiber conduit) in the trench per Contractor's Map. With prior approval from IFP, orange one and a quarter inch (1.25") HDPE conduit may be used instead.

a) Future use conduit (fiber conduit) shall be stubbed up into Idaho Falls Power supplied fiber boxes.

b) Location of fiber boxes shall be determined by Idaho Falls Power.

2. Contractor or Customer shall provide and install one inch (1") future use (fiber conduit) from existing fiber box to the house. As an option the Contractor or Customer can utilize Idaho Falls Power supplied three-quarter inch (3/4") micro duct (see figure 32).

a) Minimum of twenty-four inches (24") of burial depth.

b) Contractor or Customer to ensure both ends of the conduit are capped off with a PVC cap and marked Idaho Falls Fiber.

3. Contractor or Customer shall cap the ends of future use conduits and mark them with 2x4s.

IV. PADMOUNT EQUIPMENT REQUIREMENTS

A. Single-Phase Transformers

Transformer ground sleeves and ground rods shall be provided by IFP, but shall

be picked up at the IFP warehouse and/or IFP designated facility and installed by the Contractor in conformance with Attached Figures of this Policy. The ground sleeve location shall be compacted to a minimum of ninety-five percent (95%) of maximum density prior to placement. The top of the transformer pad shall be installed a minimum of six inches (6”) above final grade. The pad shall be level and aligned accordingly. A minimum ten-foot (10’) clear area is required in front of the transformer and a minimum of two-foot (2’) clearance is required on the other three (3) sides of the transformer. The transformer location will be determined by IFP.

B. Three-Phase Transformers

1. The Customer shall purchase or construct a concrete transformer pad per current IFP specifications in the location indicated on the marked-up plot plan. A minimum ten-foot (10') clear area is required in front of the transformer pad and a minimum of two-foot (2') clearance is required on the other three (3) sides of the pad. The final transformer location will be determined by IFP. If the Customer chooses to pour their own pad, IFP must be contacted for inspection of transformer form prior to the pad being poured. Pad design shall conform to Attached Figures this Policy. The pad location shall be compacted to a minimum of ninety-five percent (95%) of maximum density prior to concrete placement. The pad shall be level and aligned accordingly. A transformer will not be installed on the pad until it has cured a minimum of seven (7) days. No more than eight (8) conduits on the secondary side of a transformer shall be installed. When the temperature is forty (40º) degrees or lower the pad shall be covered with an insulated tarp. Transformer ground sleeves and ground rods shall be provided by IFP, but shall be picked up at the IFP warehouse and installed by the Contractor in conformance with Attached Figures of this Policy.

   a) When more than eight conduits are required for the secondary service, coordinate with IFP for the installation of a secondary cabinet to be located adjacent to the transformer. This secondary cabinet will also be used for the CT metering equipment in many applications.

C. Sectionalizing Cabinets, Ground Sleeves, Secondary Pedestals, and Fiber Boxes

1. Primary sectionalizing cabinet, ground sleeves, ground rods, secondary pedestals, and fiber boxes shall be provided by IFP, but shall be picked up at the IFP warehouse and/or IFP designated facility and installed by the Contractor in conformance with Attached Figures of this Policy. The top of the sectionalizing ground sleeve shall be installed a minimum of six inches (6”) above final grade. A minimum ten-foot (10’) clear area is required in front of the primary voltage switch cabinet and a minimum of two-foot (2)’ clearance is required on the other three (3) sides. The location of the ground sleeves, ground rods, and secondary pedestals will be determined by IFP.

D. Modifying Exterior Appearance of Equipment

1. Painting of IFP padmounted equipment shall not be allowed. Wrapping will be allowed with preapproval only. Conditions include; all of standard warning placards and transformer data to be included in the wrap, the wrap cannot cover the fins due to cooling requirements, and no commercial advertising.

V. GENERAL METERING REQUIREMENTS

These general metering requirements cover only the common meter installations. Infrequent or special applications which usually require the approval of IFP, are not included in these metering requirements. Wiring diagrams and other meter information may be obtained from the IFP Metering Department. All meters installed by IFP are owned by IFP and all maintenance of the meters shall be completed by IFP.

A. Location of Meters

1. Protection from ice, snow, rain or other damage shall be provided by the Customer for metering equipment, when location so demands. A meter shall not be located where it will be subjected to shock, vibration, or other damage. The Customer shall be responsible for the cost of repair for damage to the metering equipment due to lack of protection.

2. Meters shall be installed on the exterior of the structure and at a location which will be readily accessible at all times for reading, inspecting and testing. The meter shall not be contained inside a cabinet or utility closet. IFP does not recognize EUSERC standards.

3. Residential meters shall be front yard accessible unless prior approval for another location from IFP is obtained.

4. Meters shall be installed only in sockets which are plumb in all directions and securely fastened to the structure.

5. The centerline of the meter should be five foot, six inches (5’6”) above the finished grade or walkway. If structural details prevent this, the center line height shall be not less than four feet (4’) or more than six feet (6’) in height. See Attached Figures of this Policy.

6. In multiple meter installations such as apartment buildings or shopping centers, meters may be mounted in horizontal rows. The maximum allowable height from ground or walkway to the center line of the meter shall be six foot, six inches (6’6”). The minimum allowable height shall be two feet (2’).

7. In apartment or multiple-use buildings, meters shall not be installed above the first-story level or in the basement.

8. Sufficient access and working space shall be provided around all metering equipment to permit ready and safe operation, maintenance and testing of such

equipment, with a minimum of three feet (3') front working space, minimum of 6 feet, 6 inches (6'6") head room and a minimum of three feet (3') wide plus permitting 180° degree opening of equipment doors or hinged panels.

9. Meters shall NOT be mounted on IFP owned poles or pad mount transformers.

10. If a service has been disconnected for any reason, IFP reserves the right to require an inspection prior to energizing.

B. Meter/Point of Service Disconnect

1. External main disconnect(s) shall be required on all new Residential points of service and meter base replacements. External main disconnect(s) shall be located after the meter.

   a) Provides point of disconnect for Customer side work, up to and including the main panel.

   b) Provides an accessible fire department point of disconnect in the event of a structure fire.

   c) Provides an accessible location of IFP to drop the load when working on the meter.

   d) External main disconnect will not be required if there is a dedicated transformer for the load and if the transformer has a disconnect switch inside of it.

2. IFP strongly recommends an external main disconnect on Commercial points of service.

C. Determining Self-Contained or CT Metering

1. If a Customer is CT metered, the metering shall be only for one (1) building under residential or commercial rate.

2. The City will require CT meters for all single-phase services greater than four hundred (400) amps and <u>all three-phase services greater than two hundred (200) amps</u>.

D. Residential Metering Requirements

1. All single-phase Customers with a main switch ampacity between two hundred one (201) and four hundred (400) amperes will be metered with a self-contained, ~~meter~~ three hundred twenty (320) amp meter base. See Section V.E. of this Policy for meter base requirements.

E. Commercial Metering Requirements

1. All meters, voltage and current leads, used with instrument transformers, shall be furnished and installed by IFP meter department personnel. CTs shall be

furnished by IFP. Installation of CTs shall be coordinated with IFP meter department personnel.

2. All three-phase Customers with a main switch ampacity up to and including two hundred (200) amperes will be metered with a self-contained meter. All loads in excess of two hundred (200) amperes will be CT metered.

3. All meters or instrument transformers must be ahead of the Customer's disconnecting switch. Where multiple meter installations are required and a main switch is used, meters may be installed behind the main switch and ahead of the Customer's disconnect. No unmetered circuits will be connected to the main switch. Entrance wiring must be so arranged that metered circuits do not enter conduits, raceways or enclosures containing unmetered circuits.

4. CT installations shall not be more than fifty feet (50') from the meter base. Contractor shall install minimum one inch (1”) conduit for metering conductors only. Underground metering conduit shall be buried twenty-four inches (24”) in depth. Schedule 40 PVC with RGS above ground into meter base. CTs must be contained within a CT can or approved switchgear. A CT shall not be placed in transformers. If no building wall is available for mounting, see Free Standing CT Meter in Attached Figures of this Policy.

5. Enclosures for CTs shall be furnished and installed by the Customer (unless otherwise noted). Line and load connections shall be clearly labeled along with labeling all phases. All enclosures shall be at least eleven inches (11”) deep and of such size as to permit ready installation of current transformers on the size of conductor used. The table of enclosures for CTs, will be used as a guide for the minimum nominal size of metal cabinet to be used. All enclosures and meter bases shall have provisions for installing security seals and shall be installed at an accessible location on outside of building. IFP will not allow any Customer equipment to be installed on, or holes drilled in the transformer. Enclosures for CTs will be used on both underground and overhead instrument metered installations. The top of CT enclosure shall not exceed six feet (6’) above finished grade. The bottom of CT enclosure shall not be less than two feet (2’) above finished grade. Any variances to these requirements shall be determined by IFP.

   a) For services greater than 801 amps, the CT metering will be installed in an IFP approved pad mounted CT cabinet located adjacent to the transformer (Contractor may use wall mounted CT enclosure for service ampacities of greater than 801 amps if the CT enclosure is rated for and meets minimum UL ratings). Contractor to provide CT cabinet (See Attached Figure 16 of this Policy). CT cabinet to be split bus per American Midwest Power Service Connection Cabinet or approved equal. Coordinate with IFP for required footprint and termination detail. Ground sleeve and ground rod shall be

provided by Contractor and installed in conformance with Attached Figures of this Policy. The ground sleeve location shall be compacted to a minimum of ninety-five percent (95%) of maximum density prior to placement. The top of the CT ground sleeve shall be installed a minimum of six inches (6") above final grade. A concrete pad can be utilized instead of a ground sleeve but must have an 18"-24" deep basement for the conduits. Concrete pad must meet CT cabinet manufacturer standards for strength of the fully loaded CT cabinet and be a minimum of six inches (6") above finished grade. A minimum three-foot (3') clear area is required in front of the CT cabinet and a minimum of two-foot (2') clearance is required on the other three (3) sides of the CT cabinet. The CT cabinet location will be determined by IFP. Conductor will be provided and installed by IFP from Transformer to padmounted CT Cabinet on services greater than 801 amps. 4" conduit from Transformer to CT cabinet can have 24" radius elbows. CT Cabinet will be owned and maintained by Developer / Owner. CT Cabinet to be secured by an IFP-owned padlock.

1) CT Cabinet must meet minimum specifications given from American Midwest Power drawing "Service Connection Cabinet 'SCC' with CT provision" as follows or approved equal:

    a. Cabinet is free standing NEMA 3R. Frame is 12 gauge steel galvanized steel bolted together and include leveling provisions. All side plates are pan formed galvanized steel and are bolted to the frame with tamper-resistant zinc plated bolts. Enclosure is primed and painted transformer green enamel.

    b. Supporting structure for bus bars is bolted to framework such as that any phase bar can be relocated vertically as required to meet job requirements.

    c. Bus Bars are electrical grade plated aluminum #6101T65 per ASTM specifications # B317 supported on 17" centers using double plastic insulators Copper bus available on special order. Current density is 750A/square inch maximum for Aluminum bus and 1000A/square inch maximum for Copper bus. Each bus bar is punched with 16 sets of 9/16" square holes on 2" horizontally and 1 ¾" centers vertically.

    d. Ratings are 2000A, 2500A, 3000A, 3600A, and 4000A at 600V maximum 3Ø-4W, 3Ø-3W, 1Ø-3W. All cabinets shall have bus braced for 85,000A RMS amperes short circuit current rating.

e. Connectors in a range of #2 to 750 MCM are available in set screw type or compression type for field or factory installation. Connectors will be factory installed on right side of bus unless otherwise specified. Up to (12) – 750 MCM or (24) – 250MCM conductors can be installed on each side, per bar.

f. Meets Standards – ETL listed and labeled conforms to U.L. standard 1773 termination boxes. Conforms to NEMA standards. Meets National Electrical Code requirements. Meets Power Company requirements.

6. CT meter bases located within six feet (6') of the pad mount transformer shall be grounded and bonded to transformer to prevent touch potential.

ENCLOSURE FOR CURRENT TRANSFORMERS (CTs)

Service Entrance Conductor Ampacity	Minimum CT Cabinet Size (W x H x D)
401 & Above - 1Ø	36" x 48" x 11" (hinged door type) or smaller cabinet as approved by IFP
400 & Below - 3Ø	36" x 48" x 11" (hinged door type)
401 - 800	36" x 48" x 11" (hinged door type)
Over 801	To be coordinated and approved by IFP

F. Meter Bases

These meter base specifications cover all self-contained meter bases and transformer-rated meter bases.

1. The Customer or Contractor shall furnish meter bases and enclosures for all meter installations. All meter bases and enclosures will be installed by the Contractor and incorporated into the Customer's wiring.

2. Meter bases must be listed and installed to meet the National Electric Code and the National Electric Safety Code. Combination socket and disconnecting devices are approved for use, provided the base meets all other specifications and is wired on the line-side of the Customer's disconnecting device. Corrosion inhibitor shall be used on all connections to aluminum conductors.

3. All self-contained commercial service installations shall have factory installed

lever or link bypass.

a) IFP will allow exceptions to the bypass requirements for services with minimal and interruptible load. Services for commercial sprinkler systems controls is an example.

4. IFP will not provide new three-phase, three-wire self-contained service without a grounded neutral system.

5. Single-Phase Meter Bases

a) Single-phase 320 residential meter base shall have factory installed lever or link bypass. Single-phase meter bases over four hundred (400) ampere shall be CT instrument metered using six (6) point socket type meter base with drilled and tapped mounting plate for test switch provisions.

b) All 120/208V self-contained single-phase meter base installations shall be of a five (5) terminal socket-type meter base and installed such that the fifth terminal is in the 9 o'clock position.

6. Three-Phase Meter Bases

a) Two hundred (200) ampere and below self-contained meter base installations on three-phase service shall be a seven (7) point terminal socket type meter base.

b) Three-phase meter bases greater than two hundred (200) ampere's shall have a CT instrument metered installation using a thirteen (13) terminal socket-type meter base with a drilled and tapped mounting plate for connection of test switch equipment.

G. Installation of Meters

1. Authorized IFP personnel shall install meter on Customer provided meter base after the following steps have been taken:

a) Must pass Inspection by Electrical Inspector.

b) Customer to sign up for service at City of Idaho Falls Utility Billing.

c) Utility Billing will then submit the connect order to IFP.

2. IFP generally installs meters within five (5) working days after confirmation of connect order from Utility Billing.

H. Removal of Meters

1. Only authorized IFP personnel shall be allowed to remove meters from meter bases on the Customer's premises.

I. Meter Identification

1. All commercial buildings and all multi dwelling unit meter bases , must be permanently labeled prior to meters being energized. An electrician will be required to coordinate with Idaho Falls Power for an onsite verification that the meter socket is connected to the correct unit (208-612-8430) before CO is issued. Labels must be complete before meters can be installed. Labels shall be of a raised or embossed type, minimum size 3/4" x 2" engraved plastic with a sticky back. Letter or numbers must be a minimum of 7/16". Common gas and electric meters must have the same space designation marking i.e., numbers or letters. The building owner is responsible for proper identification of electric meters. The building owner could be held responsible for CLD costs associated with correcting billing errors caused by mixing wiring or mislabeled meters. If two electric services serve one building or space, a warning tag must be located at each meter point indicating such per NEC Article 230.2E. Labels, as described above, marked with voltage and phasing information are required if two or more services with different voltages or phasing are supplied to a building.

J. Master Metering

1. IFP's retail rates are intended for application to individual customers or units of service. Master metering is prohibited. Except as specifically excepted hereinafter. Master metered mobile home parks, multi-occupant residential buildings, commercial buildings and shopping centers connected prior to July 1, 2010, may continue to receive master metered service.

2. Mobile Home Parks built before July 1, 2010, whose space for tenants have been sub-metered by the park Owners, need not be individually metered by IFP. Mobile home park tenants will be charged the same rate for electric service, as though they were directly metered and billed by IFP.

3. Multi-occupant residential buildings, commercial buildings and shopping centers may be master metered if the electric heating, ventilation, air conditioning or water heating systems are centrally located and cannot be controlled by the individual tenants.

4. A Master-Metered Customer may install sub-metering for individual spaces at the Customer's own expense. Any master metering system must be maintained by the building owner and installed by licensed electricians. Master metered Customers may also utilize a reasonable allocation procedure to determine a tenant's usage for the purpose of reimbursing the master metered customer. Such a procedure shall constitute an allocation and not a resale. Such terms must comply with City Code 8-5-9. The Customer shall indemnify IFP for any and all liabilities, actions or claims for injury, loss or damage to persons or property arising from the allocation of service by the customer.

5. IFP will not sell or otherwise provide meters or associated equipment required for sub-metering, nor test and maintain customer owned meters.

VI. SECURITY LIGHTING

A. Program Requirements

1. IFP can provide security lighting for private property for a fixed monthly charge.
2. The Customer will pay a fixed monthly charge for each luminaire, based upon the type of luminaire and wattage. The rates are published in the City Fee Resolution.
3. Security lights can only be affixed to IFP owned poles with the cost of installation paid by the Customer.
4. The City retains ownership of all facilities and equipment.
5. For more information contact IFP Energy Services at (208) 612-8430.

VII. CUSTOMER GENERATION

A. Generation Facility Design and Installation Requirements

1. All new electric generation equipment that a Customer desires to connect to the IFP distribution system shall be approved by IFP prior to connecting the generation equipment to the IFP distribution system.
2. Customer's operating such generation equipment are required to file a Customer Interconnection Agreement Application and adhere to the following conditions:

B. Generation Facility Design Specifications:

1. Facility Description
   a) The Generation Facility shall be designed, constructed and operated in a manner such that it will interconnect and operate in parallel with IFP's electric supply system, in a safe and efficient manner without disruption, impairment, damage or loss of operational efficiency to IFP's electric supply system.
   b) The operation of the Generation Facility is intended to offset a Customer-Generator's electric energy purchases from Idaho Falls Power.
   c) The Customer-Generator shall be responsible for the design, installation and operation of the generation system and shall obtain and maintain all required permits and approvals.
   d) Any modifications to the system (aside from routine maintenance), including installation of additional generation equipment, replacement panels, or added parts shall only be made following the prior written approval of IFP.
2. Generation Facility Fuel Type and Size Limitations
   a) The Customer's Generation Facility shall have a maximum annual generating capacity of no more than the previous twelve (12) months of electric usage. Facilities found to be in excess of approved size will not be compensated for

net-monthly surplus energy sent to IFP.

b) For new residential construction the Customer's Generation Facility shall not exceed five (5) kilowatt. After the first twelve (12) months of consumption history, the Customer may reapply for additional generation.

c) Commercial facilities will be based upon an Electrical Engineer's calculations not to exceed the estimated annual kilowatt consumption per meter. Facility must be reviewed and approved by IFP for capacity and qualifying specifications.

d) All Generation Facilities are subject to review and inspection at IFP's sole discretion. It is not IFP's intent to compensate a facility that generates more than its annual consumption. In cases of excess generation, IFP may require the Generation Facility arrangements to be renegotiated.

3. Generation Facility Installation Standards and Code Compliance:

a) Customer-Generator shall provide the electrical interconnection on the Customer-Generator side of the meter between the Generation Facility and IFP's system.

b) IFP shall make reasonable modifications to their system necessary to accommodate the generation system, with all IFP system modifications being paid for by the Customer. The cost for such modifications will be estimated by IFP, with Customer payment due in advance of installation.

c) The Generation Facility shall include all equipment necessary to meet applicable safety, power quality, and interconnection requirements. These requirements are, or may include,

(1) IFP's policies
(2) National Electrical Code
(3) National Electrical Safety Code
(4) Institute of Electrical and Electronic Engineers (e.g., IEEE 1547),
(5) Nationally Recognized Testing Laboratories (e.g., UL 1741)
(6) California Rule 21
(7) Hawaii Rule 14H
(8) Utility best practices.

d) IFP Engineering staff must approve each design drawing prior to construction of the Generation Facility. The drawings must comport to generally accepted engineering design practices and be submitted with the application. This review will be completed within thirty (30) days of application.

e) Upon completion of construction, the City Electrical Inspector shall give final inspection and approval for the Generation Facility to commence operation.

f) The Customer-Generator shall attend an orientation session with Idaho Falls

Power staff. Call (208) 612-8456 for more information.

g) The Customer-Generator shall then file an application for Net-Metering and Small Generation Interconnection Agreement Application with, and receive approval from, IFP before installing an interconnected Generation Facility on Customer-Generator property. Application forms are available at the City of Idaho Falls Building Department. The completed application and Generation Facility system design drawing should be returned to the address listed on the application. The City of Idaho Falls Building Department will also require a building permit and electrical permit along with an additional copy of the system design for review. Review by the City of Idaho Falls Building Department and IFP will occur simultaneously. IFP may withhold approval, if for any reason the requested interconnection would result in a negative monetary or physical impact on IFP's electrical system.

4. Disconnection Device:

a) Customer-Generator shall furnish and install (on Customer-Generator side of the meter) a disconnecting device capable of fully disconnecting and isolating the facility from IFP's distribution system.

(1) The disconnecting device shall be located adjacent to IFP's bi-directional metering equipment and shall be of the visible break type, located in a metal enclosure that can be secured by an IFP-owned padlock or other security device.

(2) The disconnecting device shall be accessible to IFP's personnel at all times and shall conform to National Electric Code standards.

(3) IFP shall have the right to disconnect, with or without notice, the Generation Facility from IFP's distribution system in order to maintain safe and reliable electrical operating conditions or to protect IFP's system from damage, disruption, interference, or to preserve system reliability.

(4) The Generation Facility shall remain disconnected until such time that IFP determines conditions justifying the disconnection have been resolved.

5. Generation Facility Operational Standards:

a) Customer-Generator shall furnish, install, operate and maintain in good order and repair, without cost to IFP, all equipment required for the safe operation of the Generation Facility operating in parallel with the IFP's electrical supply system. This shall include, but is not limited to, equipment necessary to

(1) Establish and maintain automatic synchronism with IFP's distribution system,

(2) Automatically disconnect the Generation Facility from IFP's distribution system in the event of system overload or outage and

(3) For Solar Facilities with backup battery storage, the system must automatically disconnect from and not back feed onto, IFP's distribution system in the event of a system overload or power disruption.

(4) The Customer-Generator's Generation Facility shall not cause any adverse effects upon the quality or reliability of service provided to IFP's other customers.

(5) IFP reserves the right to require that the Generation Facility modifications to comport with Idaho Falls electrical system change in needs or requirements or to negate any adverse impact the interconnected Facility has on other customers.

(6) The Generation Facility shall not cause any adverse effects upon the quality or reliability of service provided to IFP's other customers.

(7) The Customer-Generator shall operate the Generation Facility in accordance with applicable rules and regulations.

b) On an approximate three-year rotation, the Customer is required to confirm the status of the generation facility. In addition, IFP reserves the right to inspect the facility at any time for non-backfeed protection for utility safety requirements.

(1) IFP reserves the right to disconnect the generation facility, or if required the full service if the customer fails to confirm the status of the generation facility or allow for safety inspections.

6. Generation Facility Maintenance:

a) Except for bi-directional metering equipment owned and maintained by IFP, all equipment on the Customer-Generator's side of the meter, including the required disconnecting switch, shall be provided and maintained in satisfactory operating condition by the Customer-Generator at the Customer's expense and shall remain the property and responsibility of the Customer-Generator. IFP shall bear no liability for Customer-Generator's equipment or for the consequences of its operation.

C. Generation Facility Net-Metering and Power Purchases

1. Measurement of Net Energy:

a) Metering equipment shall be installed by IFP (solely at Customer-Generator's expense) to measure the flow of electrical energy to and from the customer premise.

2. Purchase of Energy:

a) The Customer-Generator agrees to sell, and IFP agrees to issue a credit for, all electrical energy generated at the Generation Facility in excess of the Customer-Generator's on-site load in accordance with the current City fee resolution.

b) WHERE CONSUMPTION EXCEEDS GENERATION:

(1) If electricity supplied by Idaho Falls Power during the billing period exceeds the electricity generated by the Customer-Generator during the billing period, the Customer-Generator:

(a) Shall be billed for the applicable non-energy charges for the billing period under the Customer's appropriate retail rate classification;
(b) Shall be billed for the net electricity supplied by IFP at the Customer's appropriate rate adopted in ordinance for the corresponding period.

c) WHERE GENERATION EXCEEDS CONSUMPTION:

(1) If the electricity generated by the Customer-Generator exceeds the electricity supplied by IFP during the billing period the Customer-Generator:

(a) Shall be billed for the applicable non-energy charges for the billing period under the Customer's appropriate rate classification;
(b) Shall be financially credited for excess energy delivered to Idaho Falls Power during the billing period, at the rate adopted in ordinance for the corresponding period.

3. Renewable Energy Credits

a) The Customer-Generator will release to IFP all renewable-energy credits (RECs), renewable-energy credits (S-RECs) or other renewable attributes as appropriate based on actual on-site electric generation from the Generation Facility. Credits will be released to IFP for the duration of the interconnection to IFP's power system.

VIII. ELECTRIC VEHICLE CHARGING STATION PROGRAM REQUIREMENTS

A. Electric Vehicle Charging Station Installation

1. The following are Customer requirements for those who choose to participate in an IFP electric vehicle charging station lease:

a) Location

(1) The Customer is responsible for the selection of the charging station location, for both wall mount and pedestal mount charging stations with approval from IFP. Location must be approved by IFP prior to installation. IFP staff is available to assist in selecting suitable locations. To schedule an onsite assessment with an IFP representative, call (208) 612-8430.

b) Installation

(1) The Customer will be responsible to install the pedestal concrete pad base, conduit and wire, or conduit and wire for a wall mount location. See Attached Figures for the specification sheets for the pedestal installation. IFP is solely responsible for the installation of the charging station on the customers premise. If a charging station is to be installed on premises, which is leased, rather than owned, Customer must receive all necessary consent from the premises owner for the installation of the Charging Station by the Customer and allow access for operation and maintenance by IFP.

(2) Customer is responsible for acquiring all applicable permits and inspections for the construction and installation of the Station. In the event that an upgrade in electric service or wiring is required to support the stated load of the Station this will be the sole responsibility of the Customer.

(3) The Customer is responsible for all costs (labor and materials) associated with the installation site preparation: trenching, conduit, cement pedestal base, wire, etc.

c) Maintenance and Repair

(1) Standard Maintenance

(a) IFP will perform standard maintenance to the charging station to ensure it is in proper working condition throughout the term of the program. Maintenance includes cleaning the charging station connector, testing the charging voltage level, testing system functionality, and related minor work, as reasonably determined by IFP, to preserve the unimpaired function of the charging station.

(b) Customer will provide IFP access to the charging station and related equipment for maintenance between the hours of 7:00 a.m. and 7:00 p.m. local time on City business days. In the case of an emergency, Customer will allow IFP access, with notice, to the charging station and related equipment outside of normal maintenance times.

(2) Equipment Damage

(a) Customer is responsible, at its sole cost and expense, for actions related to the repair and replacement of a negligently damaged charging station to include vandalism.

(b) The Customer agrees that the facilities in which the charging station is located will be kept clean and in good repair.

(c) Customer will maintain structural portions of the premises surrounding the Charging Station, including the pavement, foundation, roof structure, walls, columns, beams, parking areas, and all adjoining common areas, in good condition and repair.

(d) If temporary removal of the Charging Station is required in

connection with the repair of the Charging Station or building structure, Customer will provide IFP five (5) business day's prior written notice or a shorter but reasonable period in the event of an emergency.

(e) Customer may interrupt electric service to a Charging Station to ensure safety or when needed to repair or maintain the premises. After completion of the repairs or maintenance, Customer will promptly restore the affected charging station and notify IFP.

(f) IFP will not be responsible for damages caused by operation of the Charging Station, including failure of equipment to operate as intended.

(g) IFP will not be held responsible for any damage to the Customer's property or electrical system due to negligent use of or vandalism to the Charging Station.

(3) Continuity of service

(a) IFP will use reasonable diligence to supply constant electricity service to the charging station but does not guarantee the service against an irregularity or interruption.

(b) IFP may interrupt electric service to a Charging Station when necessary to maintain reliability of the electric distribution system, ensure safety, reduce peak demand, or to perform maintenance on the Charging Station or related equipment.

(c) IFP may install and operate additional meter(s), data monitoring equipment, or charge management devices which gather information regarding equipment usage.

(d) Such installation will be adjacent to or near the Charging Station but will not interfere with parking or pedestrian traffic paths on premises.

(4) Labeling and signage

(a) Charging Stations will be labeled by IFP.

(b) The Lessee will not remove, mar, deface, obscure, or otherwise tamper with the Charging Station labels.

(c) Customer can install signage provided by IFP or others (as approved by IFP) to identify charging station sponsor and provide information about Charging Station care.

(5) Charging Station Locations

(a) Charging Stations will be placed on the customer side of the electric meter.

(b) Power used by the Station will flow through the Customers meter and be billed at their appropriate rate class for the customer type as

established in the current adopted rate resolution.

(c) The energy consumed by the Station(s) will not be metered separately or tracked independently of the Customers other electric usage at the location on the appropriate meter.

IX. SMALL WIRELESS FACILITIES

A. Purpose.

1. To provide design standards for Small Wireless Facilities (SWFs) also known as small cell installations. These standards are intended for 4G and 5G equipment installed on Idaho Falls Power (IFP) infrastructure located in the City of Idaho Falls and located in City-owned or City-controlled rights-of-ways and easements, but are also applicable to similar technologies such as wi-fi networks.

2. The City of Idaho Falls (City) encourages the deployment of small cell wireless technology within the City for the benefit it provides the citizens of Idaho Falls including increased connectivity and reliable networks and services.

3. The City desires to add this infrastructure with minimal negative impact to the character and aesthetics of our community.

4. The City has a fiduciary duty to manage the public right-of-way (ROW) for the health, safety, and welfare of the public.

5. These Design Standards are for siting and criteria for the installation of Wireless Facilities, including SWFs permitted by the City to be installed.

B. Definitions.

Applicable Codes. International building, fire, electrical, plumbing, or mechanical codes adopted by a recognized national code organization; and adopted by the City with local amendments.

City. The City of Idaho Falls, Idaho and its officers and employees.

City Park. An area that is zoned or otherwise designated by the City as a public park for the purpose of recreational activity.

Collocate or collocation. The installation, mounting, maintenance, modification, operation, or replacement of SWF in a City-owned or City-controlled public ROW on or adjacent to a pole.

Concealment, decorated or camouflaged. Any SWF or Pole that is covered, blended, painted, wrapped, disguised, camouflaged or otherwise concealed or decorated such the SWF blends into the surrounding environment and is visually unobtrusive as allowed as a condition for City approval. Camouflage may consist of but not limited to; hidden beneath a façade, blended with surrounding area design, painted to match the supporting area, or disguised with artificial tree branches.

Decorative pole. A pole specially designed and placed for aesthetic purposes.

Design District. An area that is zoned, or otherwise designated by the City and for which the City maintains and enforces unique design and aesthetic standards on a uniform and nondiscriminatory basis.

Downtown District. The portion in the City's downtown area that is identified as having historic or aesthetic preservation or enhancement needs by the Zoning Code.

Easement. Includes any public easement or other compatible use created by dedication, or by other means, to the City for public utility purposes or any other purpose.

Highway ROW. ROW adjacent to a state or federal highway.

Historic District. An area that is zoned or otherwise designated as a historic district under City, state or federal code.

Hydroelectric Project. All hydroelectric facilities and lands within the FERC licensed boundaries of Project 2842 the Idaho Falls Project and Project 2952 the Gem State Project.

Local. Within the geographical boundaries of the City.

Location City approved and lawfully permitted location for the SWF.

Macro tower. A guyed or self-supported pole or monopole greater in height than standard street light poles or traffic signal masts.

Small Wireless Facility (SWF). As defined by City Zoning Code-

Network Provider or Provider. A wireless service provider or a person that does not provide wireless services and that is not an electric utility but builds or installs on behalf of a wireless service provider. a SWF

License. A written authorization for the use of the public ROW or collocation on a service pole required from the City before a network provider may perform an action or initiate, continue, or complete a project over which the City has police power.

Pole. A service pole, municipally owned utility pole, or SWF Support Pole. Poles that have conductor energized at 44kV or higher are excluded from this definition.

Private easement. An easement or other real property right that is only for the benefit of the grantor and grantee and their successors and assigns.

Public Right-of-Way or Rights of Way (ROW). The area on, below, or above a public roadway, highway, street, public sidewalk, alley, waterway, or utility easement in which the City has an ownership interest or controls through contractual means. The term does not include a private easement or the airwaves above a public ROW, with regard to wireless telecommunications.

Service pole. A pole, other than a municipally owned utility pole, owned or operated by the City and located in a public ROW, including: a pole that supports traffic control functions, a structure for signage, a pole that supports lighting (other than a decorative pole); and a pole or similar structure owned or operated by the City and supporting only SWF

Traffic Signal. Any device, whether manually, electrically, or mechanically operated by which traffic is alternately directed to stop and proceed.

Wireless service. Any service, using licensed or unlicensed wireless spectrum, including the use of Wi-Fi, whether at a fixed location or mobile, provided to the public using a SWF

Wireless service provider. A person or company that provides wireless service to the public.

C. Locations of Wireless Facilities and Related Ground Equipment.

1. Most Preferable Locations

   a) Public Right-of-Way

   b) Industrial Areas

   c) Retail and Commercial areas

2. Less Preferable Locations

   a) Historic, Design, and Downtown Districts

      Any area designated by the City as a Historic, Design, or Downtown District will be subject to aesthetic requirements such as Camouflage at the nondiscriminatory discretion of the City.

   b) Municipal Parks

      ROW located in or adjacent to a street or thoroughfare that is adjacent to a municipal park or undeveloped land that is designated for a future park by zoning

3. Prohibited or Restricted Areas for Certain Wireless facilities, except with Separate City Agreement or Subject or Concealment Conditions.

   a) Residential Areas

      ROW that is adjacent to lots or undeveloped land that is designated for residential use by zoning.

      If a SWF is installed in a residential area it shall not be placed in public-utility-easement located outside of the platted ROW.

4. Historic, Design, and Downtown Districts.

   a) As a condition for approval of SWF in Historic, Design and Downtown Districts, the City shall require reasonable design decoration, Camouflage, or Concealment measures for the SWF. The City requests that a Network Provider explore the feasibility of using concealment, decoration, wrapping, or Camouflage measures to improve the aesthetics of the SWF, or related ground equipment, or any portion of the nodes, poles, or equipment, to minimize visual impacts.

b) Network Provider shall comply with and observe all applicable City, State, and Federal historic preservation laws and requirements.

c) Each license application shall disclose if it is within a District with Decorative Poles or in an area of the City zoned or otherwise designated as a Historic, Design or Downtown District.

5. Historic Landmarks

a) A Network Provider is discouraged from installing a SWF within three hundred feet (300") of a historic site or structure or Historic Landmark recognized by the City, state or federal government. It is advised that each license application disclose if it is within three hundred feet (300") of such a structure.

6. Undergrounding Requirements

a) A Network Provider shall comply with nondiscriminatory undergrounding requirements, including City ordinances, zoning regulations, state law, private deed restrictions, and other public or private restrictions, that prohibit installing aboveground structures in a ROW without first obtaining zoning or land use approval.

b) Areas may be designated from time to time by the City as Underground Requirement Areas in accordance with filed plats and or conversions of overhead to underground areas, as may be allowed by law.

c) Each license application shall disclose if it is within an area that has undergrounding requirements.

7. Exceptions

The City at its sole, undiscriminatory, discretion may grant exception to the above prohibited locations and sizes.

D. Order of Preference regarding SWF attachment to existing facilities and SWF Support Poles.

1. The preference is for all electronics except the antennae to be located in a ground mounted cabinet located behind existing walkways.

2. Existing non-decorative street light poles

3. Traffic signal structures when such installation will not interfere with the integrity of the SWF and will not interfere with the safety of the public.

4. New SWF poles located in non-residential areas at signalized intersections.

5. Ground Equipment should be minimal and the least intrusive alternative.

E. Guidelines on Placement

1. Generally, Network Provider shall construct and maintain SWF and SWF Support Poles in a Manner that does not:
    a) Obstruct, impede, or hinder the usual travel or public safety on a public ROW;
    b) Obstruct the legal use of a public ROW by other utility providers;
    c) Violate nondiscriminatory applicable codes;
    d) Violate or conflict with the City's publicly disclosed public ROW management policies or zoning ordinances;
    e) Violate the ADA; or.
    f) Violate City noise or nuisance standards
2. Licensing.
    a) As defined in City Code, Idaho Falls Service Policy, City Design Criteria, and a Master License Agreement with each Network Provider or carrier.
    b) All new equipment placed in the ROW shall require a ROW permit. This permit will ensure review of traffic and pedestrian safety and to review potential impacts from planned construction projects.
3. SWF facilities placement.
    a) ROW. SWFs with related ground equipment shall be placed, as much as possible within two feet (2') at the outer edge of the ROW line to minimize any obstruction, impediment to the usual travel or public safety on a ROW.
    b) Height above ground: SWF attachments to a pole shall be installed at least eight feet (8') above the ground, and if a SWF attachment is projecting toward the street, the attachment shall be installed no less than sixteen feet (16') above the ground.
    c) SWF Spacing: SWFs shall be no closer to another SWF than a minimum of three hundred feet (300'), unless by Conditional Use Permit.
    d) Installations on Traffic Signals: Installation on traffic signal structures must:
        (1) Be encased in a separate conduit than the traffic light electronics,
        (2) Have a separate electric power connection than the structure,
        (3) Have a separate access point than the structure, and
        (4) Be clear of any current or potential attachment of traffic control devices (signal and signs) and ancillary devices (detection, preemption, surveillance, etc.) and not constitute a violation of the Manual on Uniform Traffic Control Devices (MUTCD).
        (5) SWFs will not be allowed on any sign post located in the ROW.
4. New SWF Support Poles.
    a) All new poles must be selected from the current Idaho Falls Power list of

acceptable poles by Valmont or approved equivalent.

X. JOINT USE ATTACHMENT CONSTRUCTION STANDARDS AND POLICY

A. Purpose.

1. To provide consistent construction standards for joint use attachments on IFP structures.

B. Application Procedures

1. Any communication provider ("Provider") desiring to attach to IFP poles must first have an executed Joint Use Agreement with IFP.

2. Prior to any attachment to IFP poles, Providers desiring joint use must turn in an application to IFP. No attachments to any of IFP poles shall occur until IFP has approved a Permit for such attachments.

3. Permits are required for any overlashing. Provider, Provider's affiliates, or other third party as applicable shall pay any necessary make-ready work costs to accommodate such overlashing.

C. Make-Ready Work

1. It is the Provider's responsibility to advise IFP of any required make-ready work.

2. The Provider will be required to pay for all make-ready work. This payment may be required in advance of any IFP work.

D. All pole attachments shall be made in accordance with the most current version of the following standards, as applicable:

1. National Electric Safety Code ("NESC")

2. National Electrical Code ("NEC')

3. Regulations of the Occupational Safety and Health Administration ("OSHA").

4. Service Policy Figures 18-23.

E. Position and space

1. The top communication position on all IFP poles is reserved for City of Idaho Falls, IFP, and IFF communication equipment, solely as determined by IFP.

2. A position generally consists of twelve inches (12") of pole space.

3. Providers are permitted no more than one (1) attachment per pole without express written IFP approval.

4. A communication cross arm may be installed when vertical space on the pole is or may be limited, solely as determined by IFP. A communication cross arm is

recommended when there are three (3) or more communication lines attached to a pole or as vertical clearance from ground would reasonably require.

F. Clearances

1. Minimum separation between electric service drops and communication service drops shall be twelve inches (12”), per NESC 235C1b (exception 3).

2. Minimum mid-span vertical separation between communication cables shall be six inches (6”).

G. Vertical Risers

1. Unless otherwise directed by IFP, all risers, including those providing 120/240 volt power for communications equipment enclosure, shall be placed on the quarter faces of the pole and must be installed in sealed conduit on stand-off brackets. A two-inch (2”) clearance in any direction from cable, bolts, clamps, metal supports, and other equipment shall be maintained.

H. Climbing Space

1. A clear climbing space must be maintained at all times on the face of the pole. All attachments must be placed to allow and maintain a clear and proper climbing space on the face of IFP’s poles. Communication cable/wire attachments shall be placed on the same side of the pole as those of other attaching entities.

I. Anchors and Down Guys

1. **No attachment may be installed on an IFP pole until all required guys and anchors are installed. No attachment may be modified, added to, or relocated in such a way as is likely to materially increase the stress or loading on IFP poles until all required guys and anchors are installed. Placing pulling strain on IFP poles prior to supporting the pole is cause to immediately stop work.**

2. Providers shall be responsible for procuring and installing all anchors and guy wires to support the additional stress placed on IFP poles joint use facilities attachments. Anchors shall be guyed adequately. Anchors and guy wires shall be installed on each IFP pole where an angle or a dead-end occurs with guy attachments to poles at or below its cable/wire attachment.

3. Providers shall not attach guy wires to the anchors of IFP or any third-party user without the anchor owner’s specific prior written consent.

4. Any down guys, if needed, shall be bonded, to the vertical ground wires of IFP’s pole where a ground wire is available.

J. Service Drops

1. Aerial service drops shall not be attached directly to the pole. Aerial service drops shall be attached to the messenger a minimum of six inches (6”) from the

pole.

K. Tagging

1. All communications cables shall be identified with a band-type cable tag or other identification acceptable to IFP at each attachment within twelve inches (12”) of the pole. The tag shall be consistent with industry standards, and shall include, at minimum, the following: cable owners name, which can be read by observation from the ground.

L. Pole Removal

1. In the event a pole is abandoned or replaced, the last party attached to a pole shall be responsible for removal, disposal, and liability of such pole

M. Nonfunctional Attachments

1. Providers shall remove any nonfunctional attachments within one (1) year of the attachment becoming nonfunctional.

3 PHASE TRANSFORMER PAD

PLAN VIEW

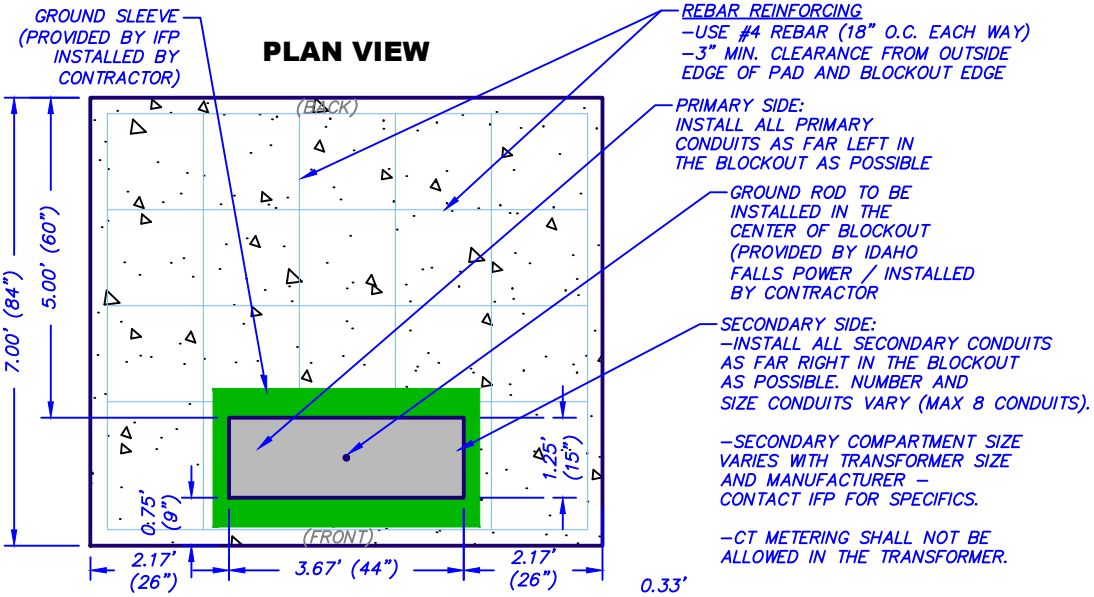

LAYOUT VIEW

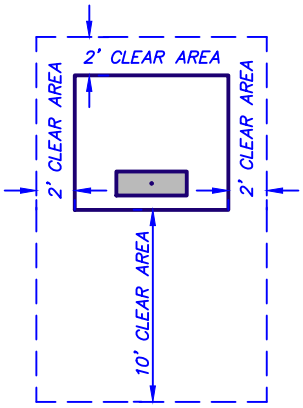

PROFILE VIEW

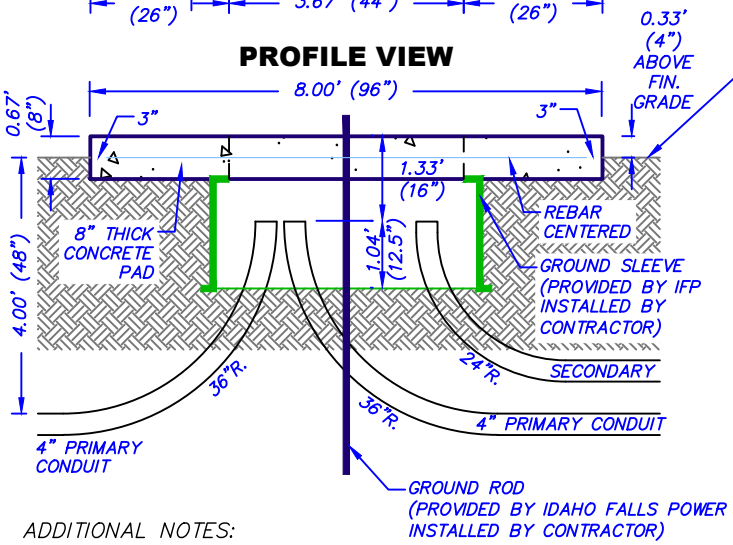

SIDE VIEW

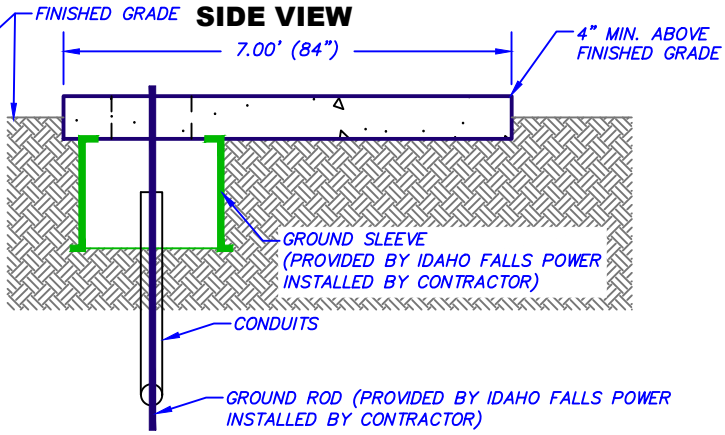

ADDITIONAL NOTES:

1. 8" PRE–CAST CONCRETE PAD IS AN ACCEPTABLE OPTION. SEE EARTHWORK AND OTHER SPECIFICATIONS REQUIREMENTS BELOW AND IN DRAWING. INSPECTION PRIOR TO PLACEMENT IS REQUIRED.
2. INSTALL CONDUITS AS SHOWN IN DETAIL. INSTALL BELL ENDS AND CAP ALL CONDUITS. IDENTIFY ALL CONDUITS FOR ROUTING. CONTRACTOR TO PLACE IFP PROVIDED GROUND SLEEVE AND GROUND ROD AS SHOWN IN DETAIL. CONTACT IFP FOR INSPECTION.
3. TRANSFORMER PAD SHALL HAVE A MINIMUM THICKNESS OF 8" CONCRETE AND SHALL BE DESIGNED WITH SUFFICIENT REINFORCING TO ACCOMMODATE A TRANSFORMER WEIGHT OF 16,000 LBS (SEE DRAWING).
4. THE PAD LOCATION SHALL BE COMPACTED TO A MINIMUM OF 95% OF MAXIMUM DENSITY PRIOR TO PLACEMENT OF CONCRETE.
5. THE TRANSFORMER WILL NOT BE INSTALLED UNTIL THE CONCRETE HAS CURED A MINIMUM OF (7) DAYS. IF THE TEMPERATURE IS EXPECTED TO DROP BELOW 40°, THERMAL BLANKETS MUST BE USED FOR A MINIMUM PERIOD OF 72 HOURS. DO NOT PLACE PAD ON THE FROZEN EARTH.
6. TOP OF THE TRANSFORMER PAD SHALL BE CONSTRUCTED TO A MINIMUM OF 4" ABOVE FINISHED GRADE. POSITIVE DRAINAGE MUST BE PROVIDED AWAY FROM THE TRANSFORMER PAD. CONTACT IFP FOR INSPECTION PRIOR TO PLACEMENT OF CONCRETE.

ISOMETRIC VIEW OF GROUND SLEEVE

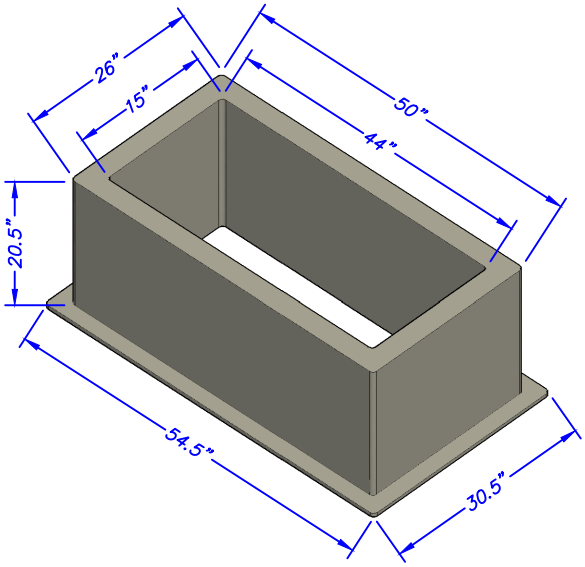

1" = 3'

IDAHO FALLS POWER

SERVICE POLICY
FIGURE 1

DATE MODIFIED: 12/17/2019

3 PHASE TRANSFORMER PAD (SMALL)

PLAN VIEW

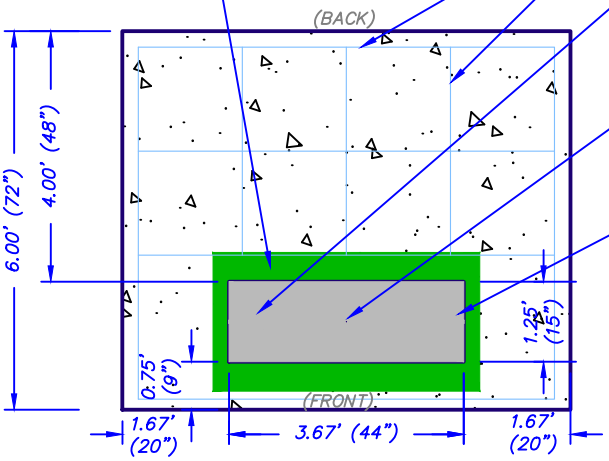

REBAR REINFORCING
–USE #4 REBAR (19 1/2" O.C. EACH WAY)
–3" MIN. CLEARANCE FROM OUTSIDE EDGE OF PAD AND BLOCKOUT EDGE

PRIMARY SIDE:
INSTALL ALL PRIMARY CONDUITS AS FAR LEFT IN THE BLOCKOUT AS POSSIBLE

GROUND ROD TO BE INSTALLED IN THE CENTER OF BLOCKOUT (PROVIDED BY IDAHO FALLS POWER / INSTALLED BY CONTRACTOR

SECONDARY SIDE:
–INSTALL ALL SECONDARY CONDUITS AS FAR RIGHT IN THE BLOCKOUT AS POSSIBLE. NUMBER AND SIZE CONDUITS VARY (MAX 8 CONDUITS).

–SECONDARY COMPARTMENT SIZE VARIES WITH TRANSFORMER SIZE AND MANUFACTURER – CONTACT IFP FOR SPECIFICS.

–CT METERING SHALL NOT BE ALLOWED IN THE TRANSFORMER.

LAYOUT VIEW

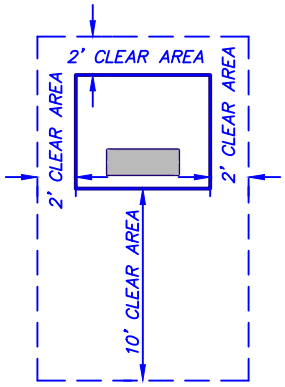

PROFILE VIEW

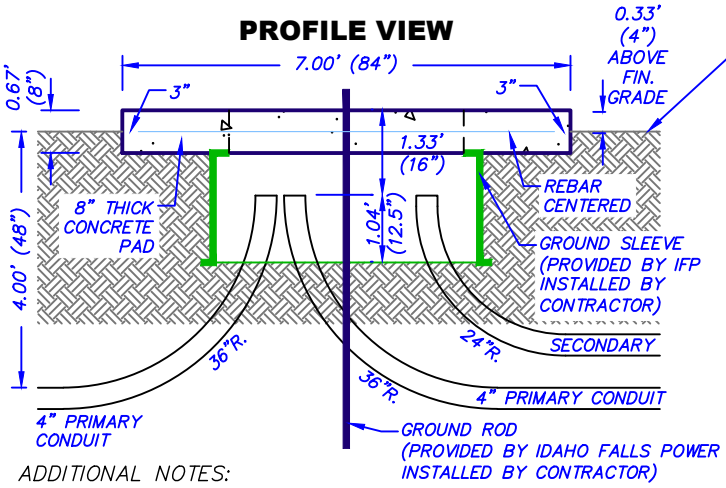

SIDE VIEW

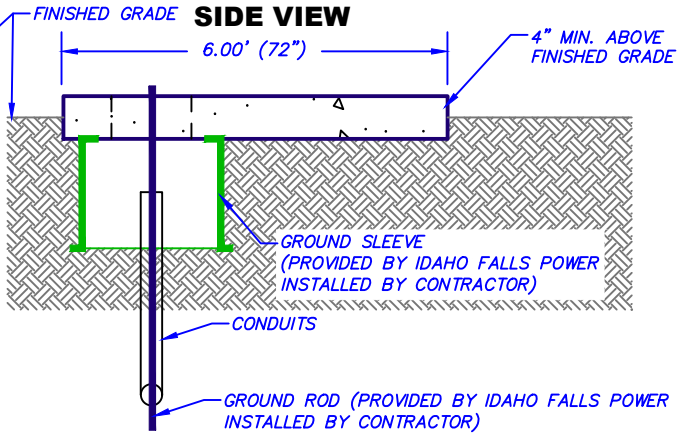

ADDITIONAL NOTES:

1. 8" PRE–CAST CONCRETE PAD IS AN ACCEPTABLE OPTION. SEE EARTHWORK AND OTHER SPECIFICATIONS REQUIREMENTS BELOW AND IN DRAWING. INSPECTION PRIOR TO PLACEMENT IS REQUIRED.
2. INSTALL CONDUITS AS SHOWN IN DETAIL. INSTALL BELL ENDS AND CAP ALL CONDUITS. IDENTIFY ALL CONDUITS FOR ROUTING. CONTRACTOR TO PLACE IFP PROVIDED GROUND SLEEVE AND GROUND ROD AS SHOWN IN DETAIL. CONTACT IFP FOR INSPECTION.
3. TRANSFORMER PAD SHALL HAVE A MINIMUM THICKNESS OF 8" CONCRETE AND SHALL BE DESIGNED WITH SUFFICIENT REINFORCING TO ACCOMMODATE A TRANSFORMER WEIGHT OF 16,000 LBS (SEE DRAWING).
4. THE PAD LOCATION SHALL BE COMPACTED TO A MINIMUM OF 95% OF MAXIMUM DENSITY PRIOR TO PLACEMENT OF CONCRETE.
5. THE TRANSFORMER WILL NOT BE INSTALLED UNTIL THE CONCRETE HAS CURED A MINIMUM OF (7) DAYS. IF THE TEMPERATURE IS EXPECTED TO DROP BELOW 40°, THERMAL BLANKETS MUST BE USED FOR A MINIMUM PERIOD OF 72 HOURS. DO NOT PLACE PAD ON THE FROZEN EARTH.
6. TOP OF THE TRANSFORMER PAD SHALL BE CONSTRUCTED TO A MINIMUM OF 4" ABOVE FINISHED GRADE. POSITIVE DRAINAGE MUST BE PROVIDED AWAY FROM THE TRANSFORMER PAD. CONTACT IFP FOR INSPECTION PRIOR TO PLACEMENT OF CONCRETE.

ISOMETRIC VIEW OF GROUND SLEEVE

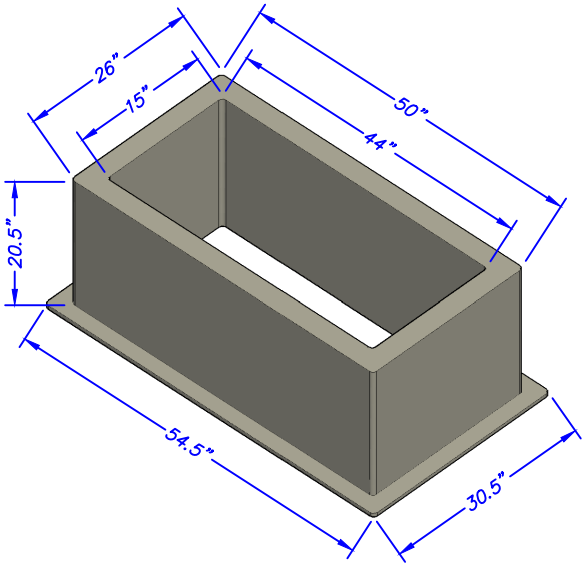

FOR USE ONLY WHEN DIRECTED BY IDAHO FALLS POWER

IDAHO FALLS POWER
SERVICE POLICY
FIGURE 2
DATE MODIFIED: 12/17/2019

1" = 3'

3 PHASE TRANSFORMER PAD (LARGE)

PLAN VIEW

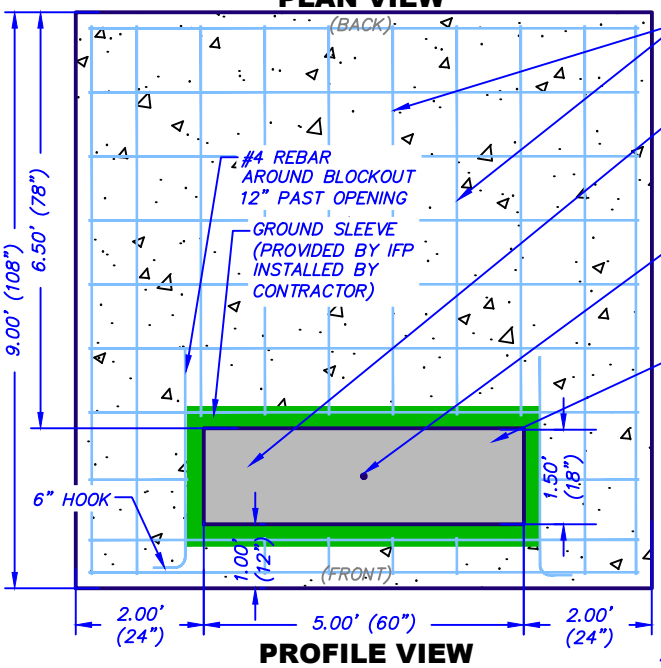

REBAR REINFORCING
–USE #4 REBAR (12" O.C. EACH WAY)
–3" MIN. CLEARANCE FROM OUTSIDE EDGE OF PAD AND BLOCKOUT EDGE

PRIMARY SIDE:
INSTALL ALL PRIMARY CONDUITS AS FAR LEFT IN THE BLOCKOUT AS POSSIBLE

GROUND ROD TO BE INSTALLED IN THE CENTER OF BLOCKOUT (PROVIDED BY IDAHO FALLS POWER / INSTALLED BY CONTRACTOR

SECONDARY SIDE:
–INSTALL ALL SECONDARY CONDUITS AS FAR RIGHT IN THE BLOCKOUT AS POSSIBLE. NUMBER AND SIZE CONDUITS VARY (MAX 8 CONDUITS).

–SECONDARY COMPARTMENT SIZE VARIES WITH TRANSFORMER SIZE AND MANUFACTURER – CONTACT IFP FOR SPECIFICS.

–CT METERING SHALL NOT BE ALLOWED IN THE TRANSFORMER.

LAYOUT VIEW

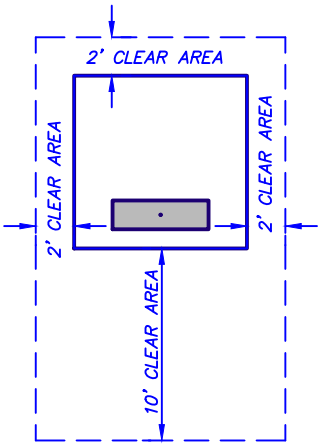

PROFILE VIEW

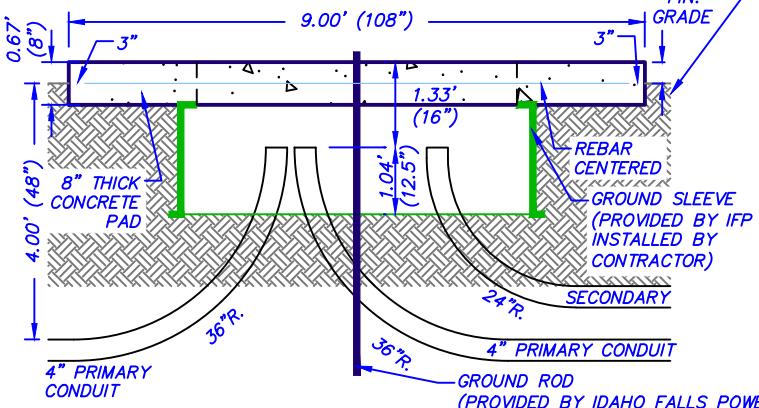

0.33' (4") ABOVE FIN. GRADE

FINISHED GRADE

SIDE VIEW

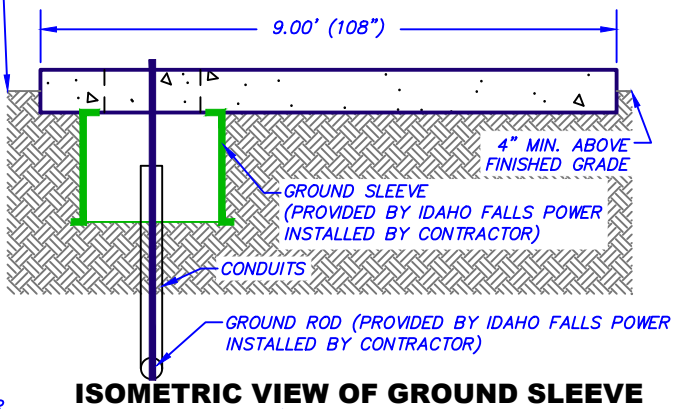

ISOMETRIC VIEW OF GROUND SLEEVE

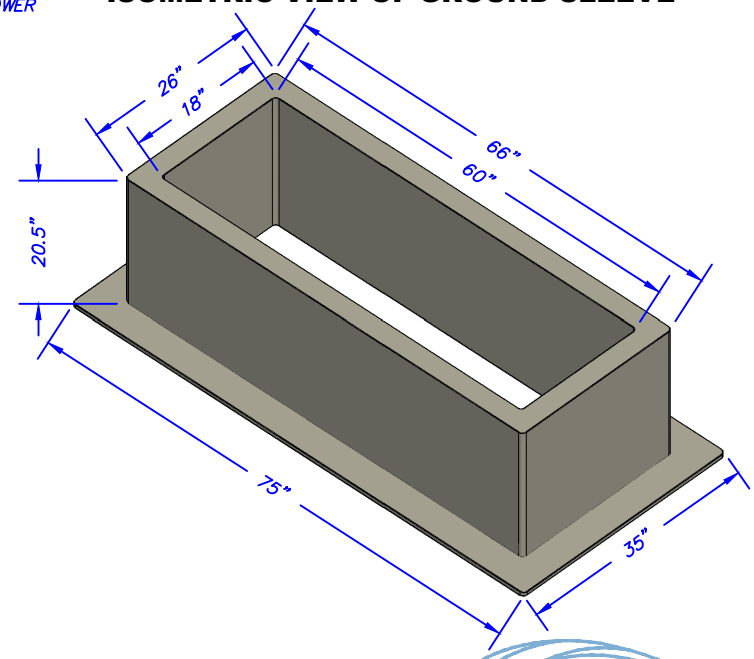

ADDITIONAL NOTES:

1. 8" PRE–CAST CONCRETE PAD IS AN ACCEPTABLE OPTION. SEE EARTHWORK AND OTHER SPECIFICATIONS REQUIREMENTS BELOW AND IN DRAWING. INSPECTION PRIOR TO PLACEMENT IS REQUIRED.
2. INSTALL CONDUITS AS SHOWN IN DETAIL. INSTALL BELL ENDS AND CAP ALL CONDUITS. IDENTIFY ALL CONDUITS FOR ROUTING. CONTRACTOR TO PLACE IFP PROVIDED GROUND SLEEVE AND GROUND ROD AS SHOWN IN DETAIL. CONTACT IFP FOR INSPECTION.
3. TRANSFORMER PAD SHALL HAVE A MINIMUM THICKNESS OF 8" CONCRETE AND SHALL BE DESIGNED WITH SUFFICIENT REINFORCING TO ACCOMMODATE A TRANSFORMER WEIGHT OF 16,000 LBS (SEE DRAWING).
4. THE PAD LOCATION SHALL BE COMPACTED TO A MINIMUM OF 95% OF MAXIMUM DENSITY PRIOR TO PLACEMENT OF CONCRETE.
5. THE TRANSFORMER WILL NOT BE INSTALLED UNTIL THE CONCRETE HAS CURED A MINIMUM OF (7) DAYS. IF THE TEMPERATURE IS EXPECTED TO DROP BELOW 40°, THERMAL BLANKETS MUST BE USED FOR A MINIMUM PERIOD OF 72 HOURS. DO NOT PLACE PAD ON THE FROZEN EARTH.
6. TOP OF THE TRANSFORMER PAD SHALL BE CONSTRUCTED TO A MINIMUM OF 4" ABOVE FINISHED GRADE. POSITIVE DRAINAGE MUST BE PROVIDED AWAY FROM THE TRANSFORMER PAD. CONTACT IFP FOR INSPECTION PRIOR TO PLACEMENT OF CONCRETE.

FOR USE ONLY WHEN DIRECTED BY IDAHO FALLS POWER

1" = 3'

IDAHO FALLS POWER
SERVICE POLICY
FIGURE 3
DATE MODIFIED: 12/17/2019

SINGLE PHASE TRANSFORMER BASE (GROUND SLEEVE)

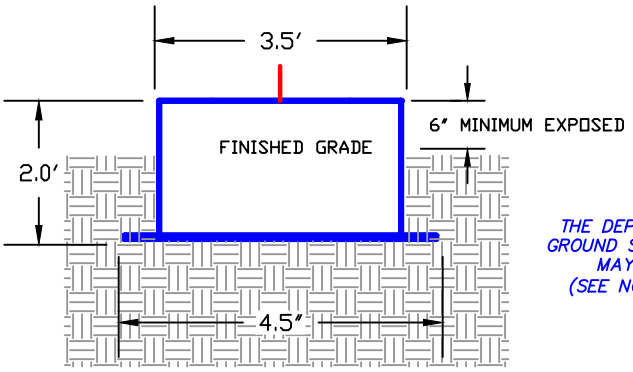

FRONT VIEW

THE DEPTH OF GROUND SLEEVE MAY VARY (SEE NOTE 6)

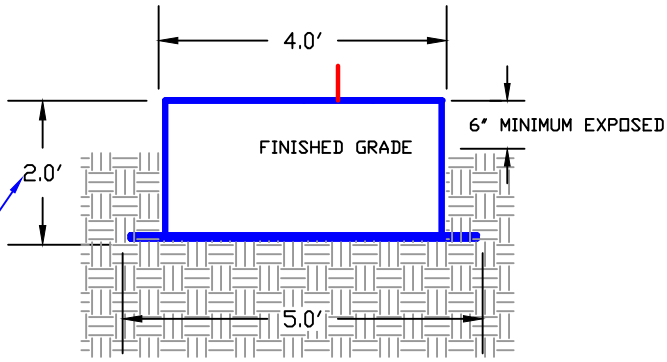

SIDE VIEW

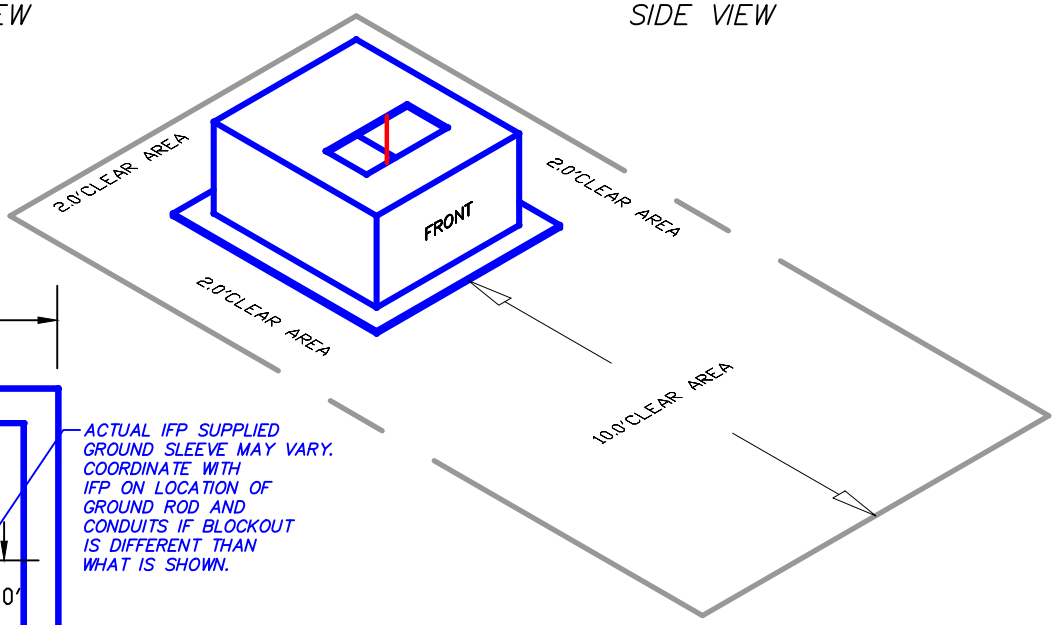

DIMENSIONS MAY VARY (SEE NOTE 6)

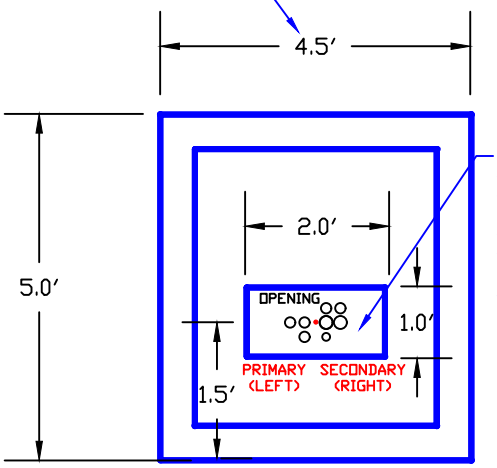

ACTUAL IFP SUPPLIED GROUND SLEEVE MAY VARY. COORDINATE WITH IFP ON LOCATION OF GROUND ROD AND CONDUITS IF BLOCKOUT IS DIFFERENT THAN WHAT IS SHOWN.

PLAN VIEW

GROUND ROD TO BE INSTALLED IN THE CENTER OF THE OPENING (UNLESS OTHERWISE DIRECTED). (PROVIDED BY IDAHO FALLS POWER INSTALLED BY CONTRACTOR).

1. SINGLE PHASE TRANSFORMER BASE (GROUND SLEEVE) SHALL BE PROVIDED BY IDAHO FALLS POWER BUT SHALL BE INSTALLED TO REQUIRED GRADE BY THE CONTRACTOR/DEVELOPER.
2. THE PAD LOCATION SHALL BE COMPACTED TO A MINIMUM OF 95% OF MAXIMUM DENSITY PRIOR TO PLACEMENT.
3. THE TOP OF THE BASE SHALL BE INSTALLED A MINIMUM OF 6" ABOVE FINISHED GRADE. POSITIVE DRAINAGE MUST BE PROVIDED AWAY FROM THE CABINET BASE.
4. ANY DEVIATION IN THE FINAL GRADE OR LOCATION OF THE CABINET BASE MUST BE APPROVED BY IDAHO FALLS POWER.
5. CT METERING WILL NOT BE ALLOWED IN THE TRANSFORMER.
6. ACTUAL DIMENSIONS OF GROUND SLEEVE MAY VARY FROM WHAT IS SHOWN IN DRAWING; VERIFY DIMENSIONS WITH IDAHO FALLS POWER PRIOR TO INSTALLATION.

IDAHO FALLS POWER

SERVICE POLICY
FIGURE 4
DATE MODIFIED: 01/31/2019

3 PHASE SECTIONALIZING CABINET BASE (GROUND SLEEVE)

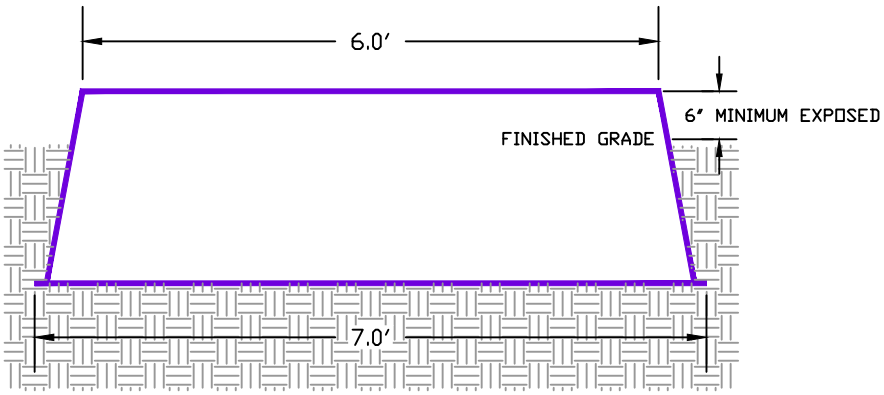

FRONT VIEW

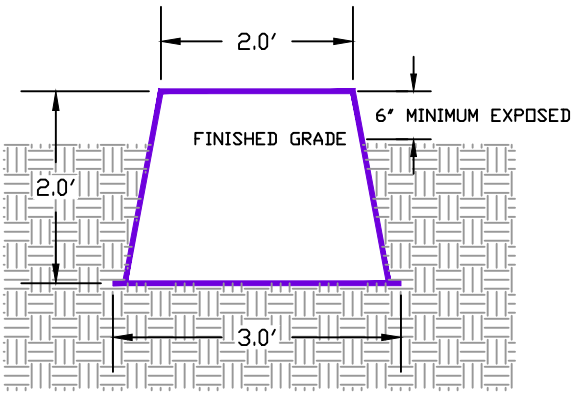

END VIEW

GROUND ROD TO BE INSTALLED IN CENTER OF OPENING.(PROVIDED BY IDAHO FALLS POWER INSTALLED BY CONTRACTOR).

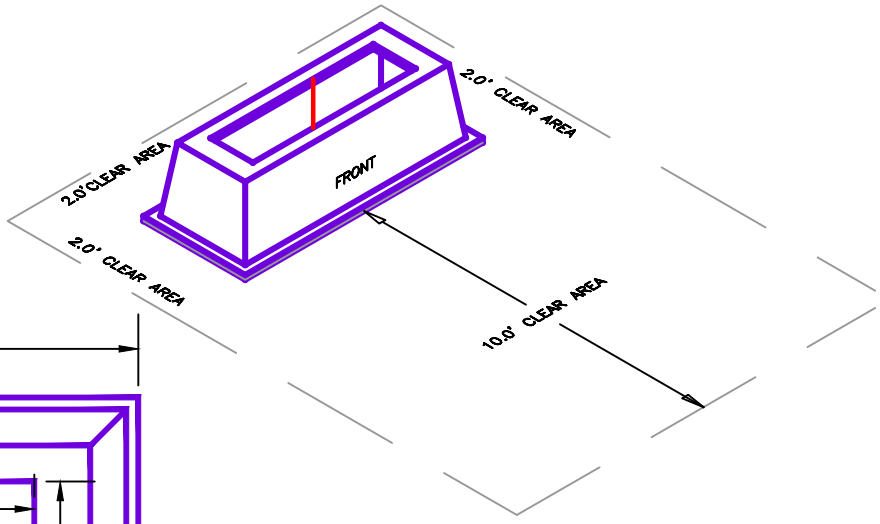

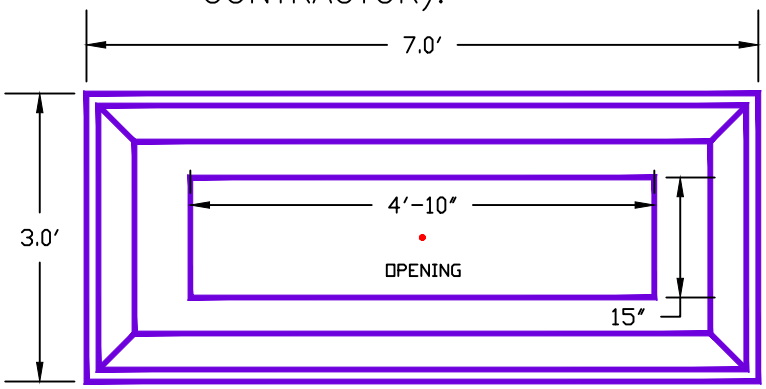

PLAN VIEW

1. 3 PHASE SECTIONLIZING CABINET BASE (GROUND SLEEVE) SHALL BE PROVIDED BY IDAHO FALLS POWER BUT SHALL BE INSTALLED TO REQUIRED GRADE BY THE CONTRACTOR/DEVELOPER.
2. THE PAD LOCATION SHALL BE COMPACTED TO A MINIMUM OF 95% OF MAXIMUM DENSITY PRIOR TO PLACEMENT.
3. THE TOP OF THE BASE SHALL BE INSTALLED A MINIMUM OF 6" ABOVE FINISHED GRADE.
4. POSITIVE DRAINAGE MUST BE PROVIDED AWAY FROM THE CABINET BASE.

IDAHO FALLS POWER

SERVICE POLICY
FIGURE 5
DATE MODIFIED: 01/15/2019

SINGLE PHASE SECTIONALIZING CABINET BASE (GROUND SLEEVE)

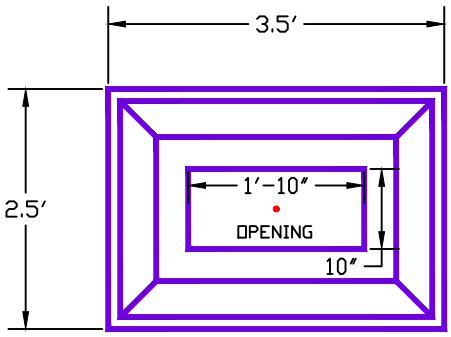

PLAN VIEW

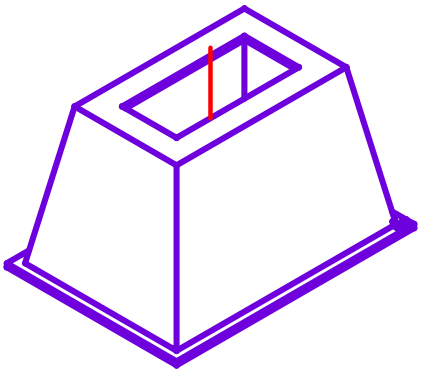

• GROUND ROD TO BE INSTALLED IN CENTER OF OPENING

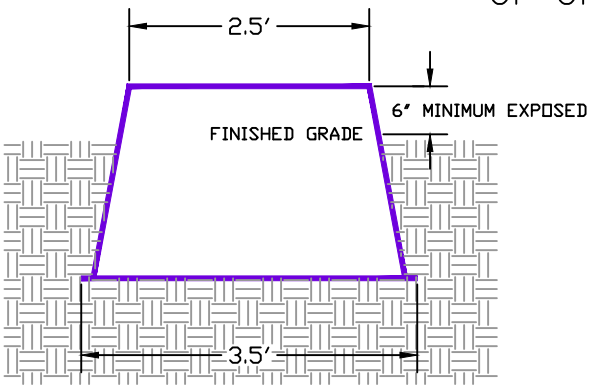

FRONT VIEW

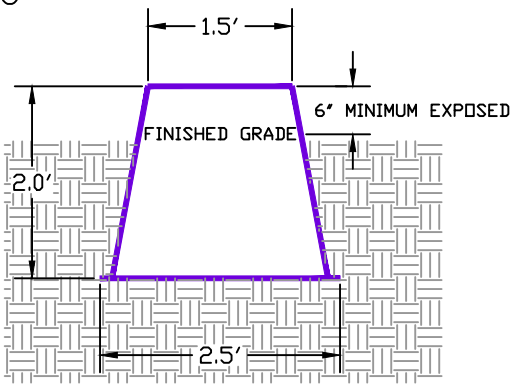

END VIEW

1. SINGLE PHASE SECTIONALIZING CABINET BASE (GROUND SLEEVE) SHALL BE PROVIDED BY IDAHO FALLS POWER BUT SHALL BE INSTALLED TO REQUIRED GRADE BY THE CONTRACTOR/DEVELOPER.
2. THE PAD LOCATION SHALL BE COMPACTED TO A MINIMUM OF 95% OF MAXIMUM DENSITY PRIOR TO PLACEMENT.
3. THE TOP OF THE BASE SHALL BE INSTALLED A MINIMUM OF 6" ABOVE FINISHED GRADE.
4. POSITIVE DRAINAGE MUST BE PROVIDED AWAY FROM THE CABINET BASE.
5. ANY DEVIATION IN THE FINAL GRADE OR LOCATION OF THE CABINET BASE MUST BE APPROVED BY IDAHO FALLS POWER.

IDAHO FALLS POWER

SERVICE POLICY
FIGURE 6
DATE MODIFIED: 01/15/2019

FIBER & SECONDARY SERVICE PEDESTAL BASE (GROUND SLEEVE)

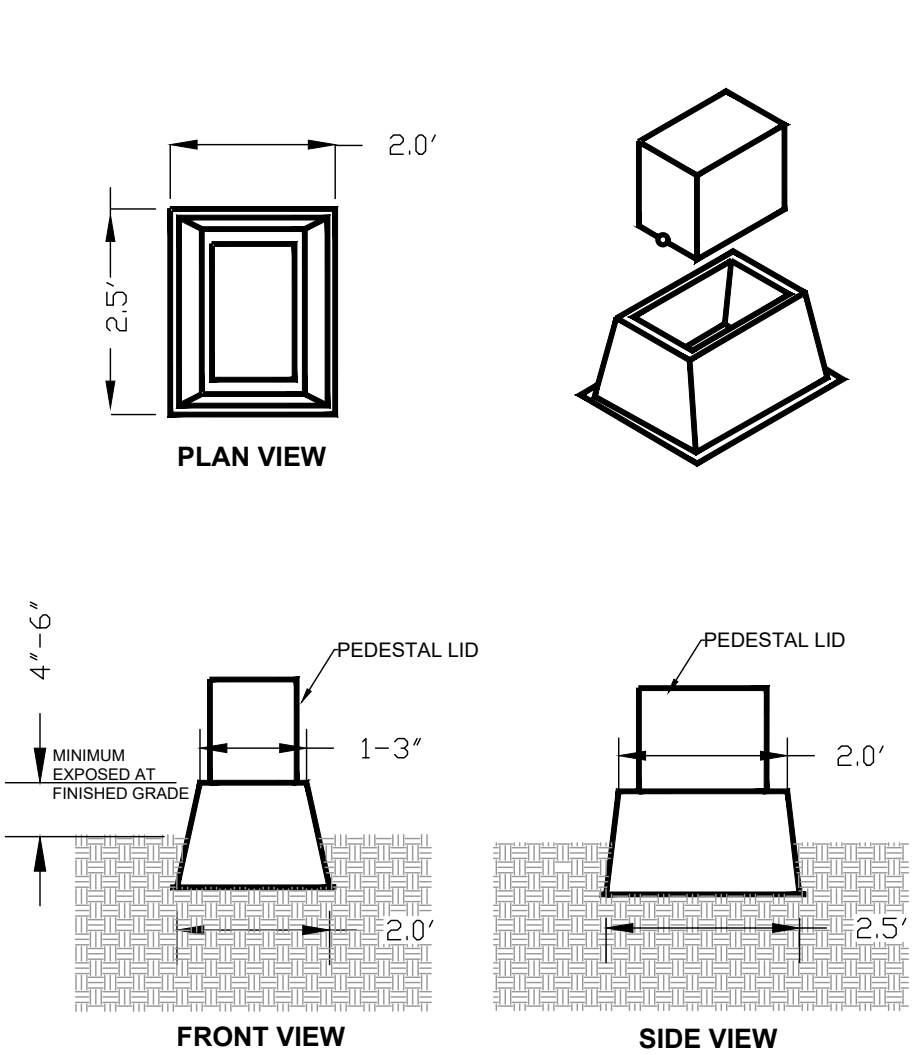

SECONDARY SERVICE PEDESTAL

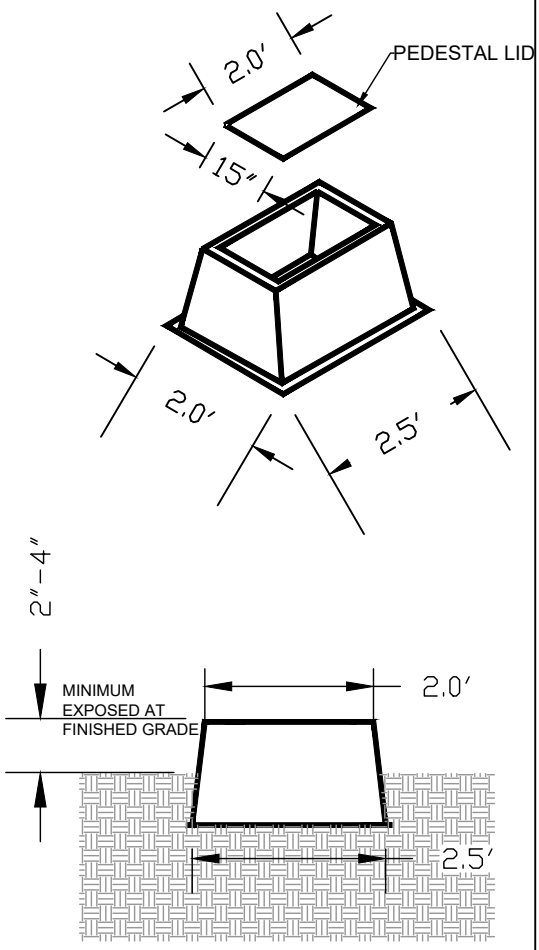

FIBER BOX

1. FIBER AND SECONDARY SERVICE PEDESTAL. BASE (GROUND SLEEVE) SHALL BE PROVIDED BY IDAHO FALLS POWER, BUT SHALL BE INSTALLED TO REQUIRED GRADE BY THE CONTRACTOR/DEVELOPER.
2. THE TOP OF THE SECONDARY BASE SHALL BE INSTALLED A MINIMUM OF 4”–6” ABOVE FINISHED GRADE AND TOP OF THE FIBER BOX SHALL BE INSTALLED A MINIMUM OF 2”–4” ABOVE FINISHED GRADE.
3. POSITIVE DRAINAGE MUST BE PROVIDED AWAY FROM THE PEDESTAL BASE.
4. CONTRACTORS SHALL ADD FREE DRAINING AGGREGATE TO THE FLOOR OF THE FIBER BOX GROUND SLEEVE.

IDAHO FALLS POWER

SERVICE POLICY
FIGURE 7
DATE MODIFIED: 01/25/2022

TYPICAL BELL END INSTALLATION DIAGRAM

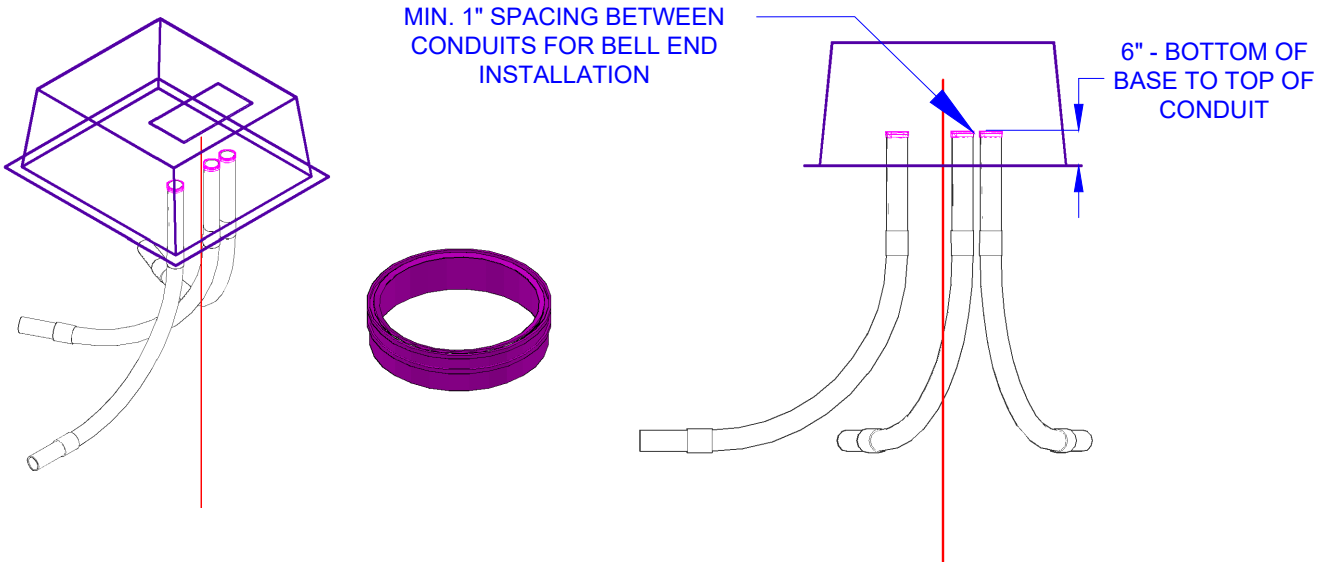

1. ALL CONDUIT (PRIMARY AND SECONDARY) MUST BE CUT TO 6" FROM BOTTOM OF BASE.
2. BELL ENDS MUST BE SUPPLIED AND INSTALLED BY DEVELOPER/CONTRACTOR.
3. ALL CONDUITS MUST BE CAPPED AND LABELED TO IDENTIFY ROUTING.
4. BELL END INSTALLATION DETAIL TO BE USED FOR ALL ELECTRICAL FACILITIES INCLUDING SECONDARY PEDESTALS, SWITCH CABINETS, TRANSFORMERS, AND LIGHT POLE BASES.
5. TEMPORARY SINGLE PHASE TRANSFORMER PADS SHALL HAVE CONDUIT NO MORE THAN 2" ABOVE PAD.

TEMPORARY SINGLE PHASE TRANSFORMER PADS ONLY

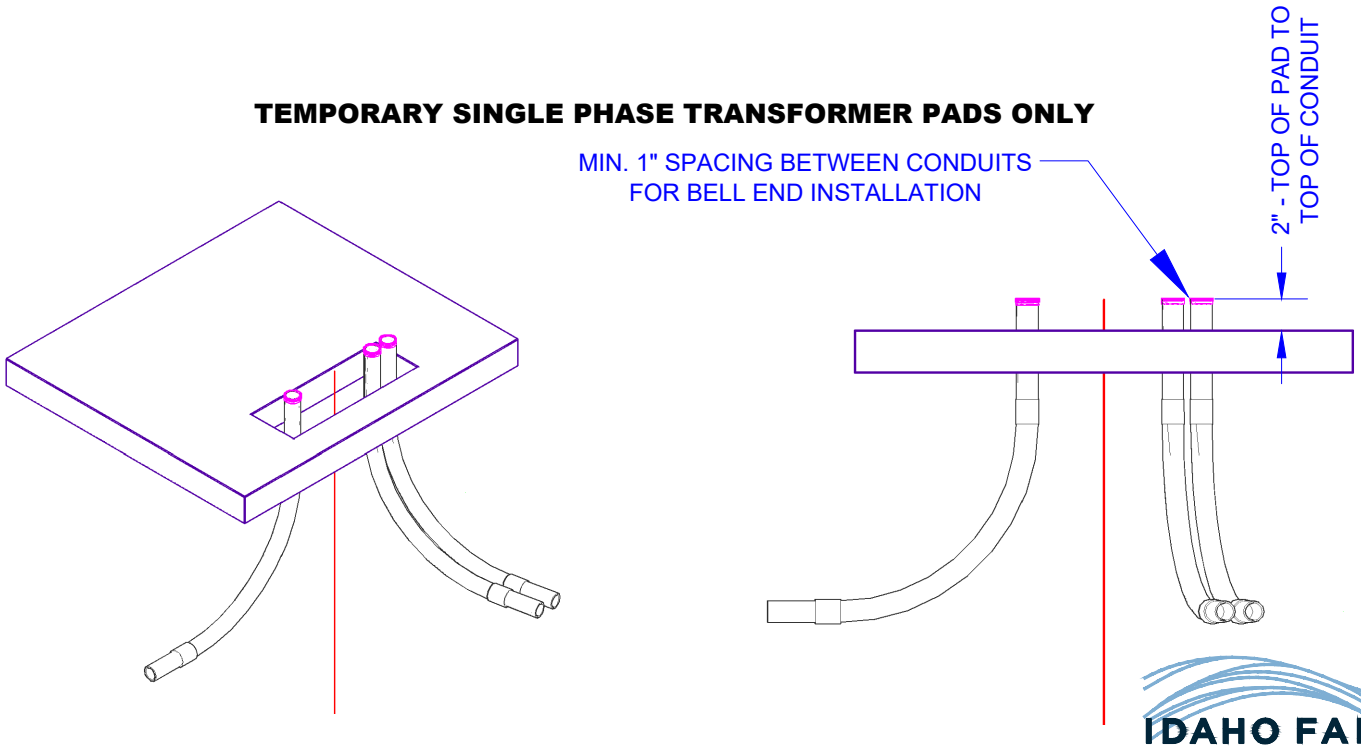

IDAHO FALLS POWER

SERVICE POLICY
FIGURE 8
DATE MODIFIED: 01/19/2021

JOINT UTILITY TRENCH

PLAN VIEW

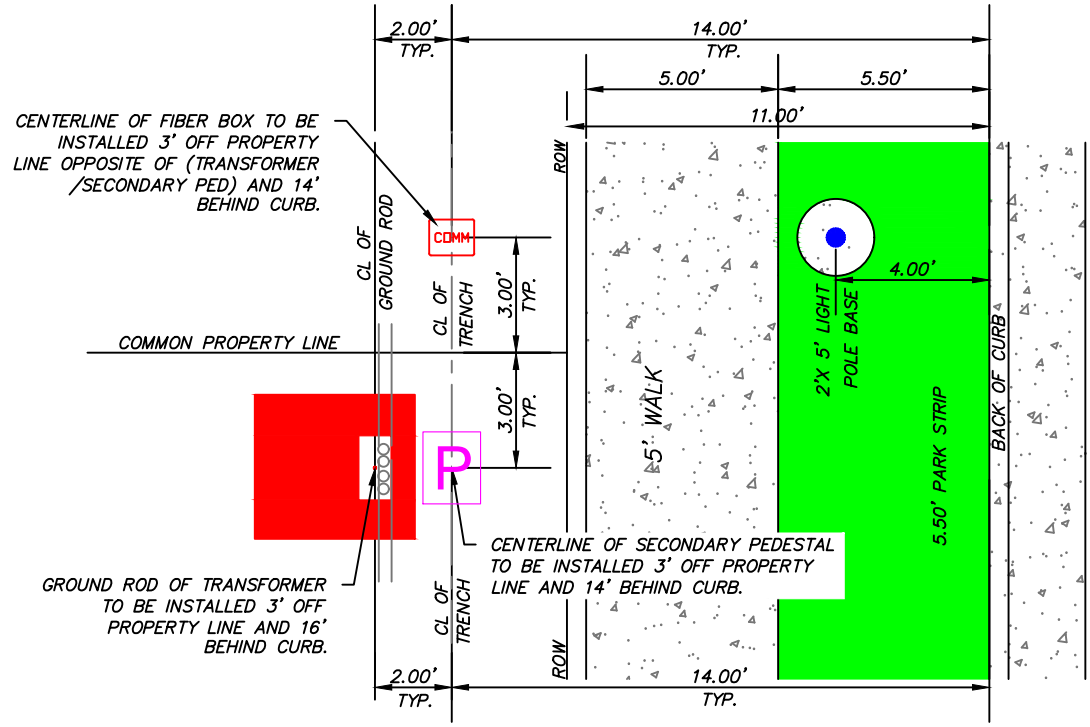

TRENCH PROFILE

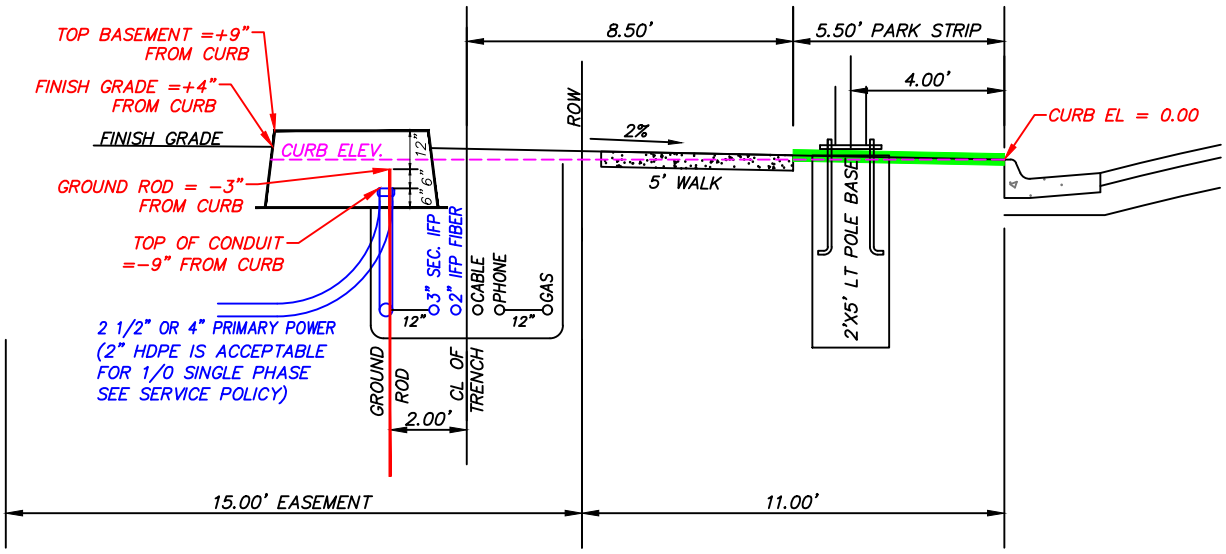

TRENCH DETAIL

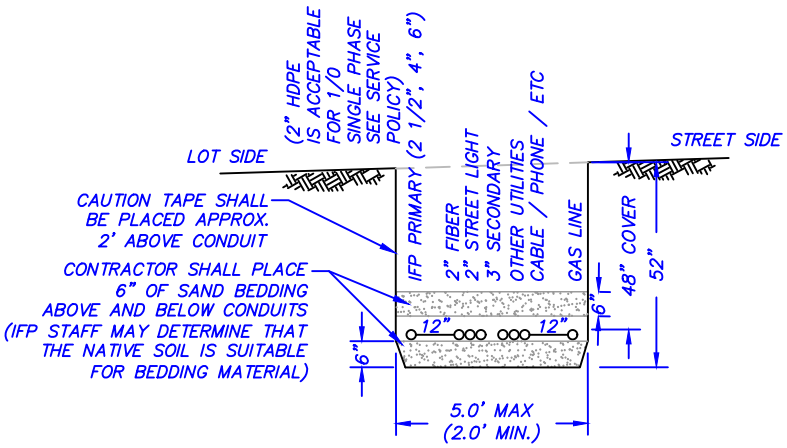

DISTANCES MAY VARY - SEE ELECTRICAL SITE PLANS PRIOR TO CONSTRUCTION

IDAHO FALLS POWER

SERVICE POLICY
FIGURE 9
DATE MODIFIED: 1/14/2020

LIGHT POLE FOUNDATION DETAIL

PLAN VIEW

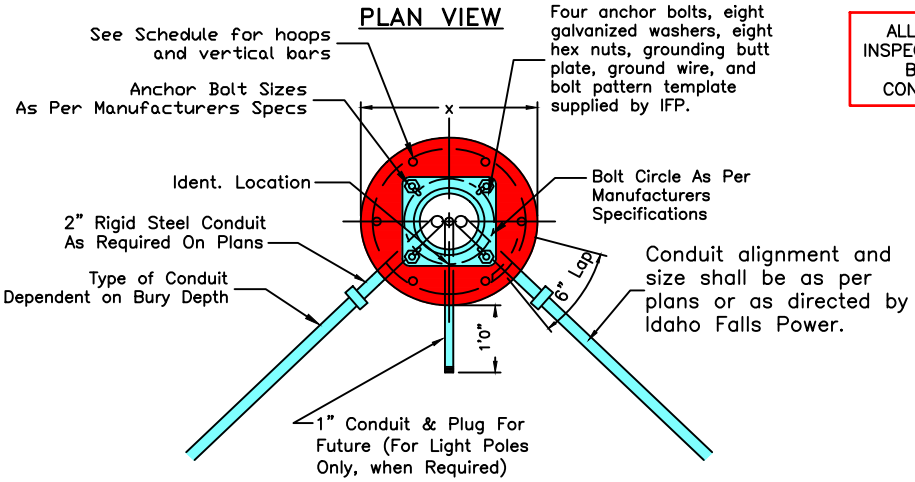

ALL BASES SHALL BE INSPECTED AND APPROVED BY IFP PRIOR TO CONCRETE PLACEMENT

NOT TO SCALE

40' LIGHT POLE BASE PATTERN (TYPE C)

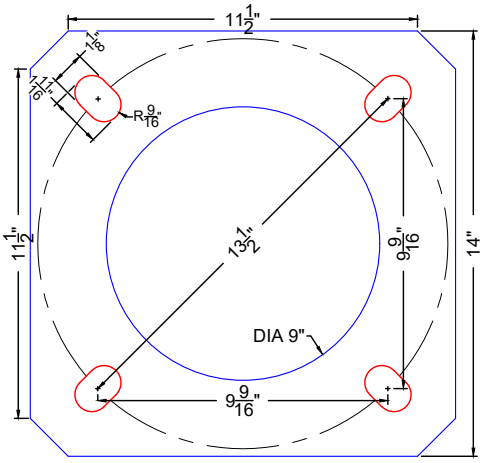

POLE FOUNDATION SCHEDULE										
STRUCTURE TYPE	FOUNDATION TYPE	X	Y	HOOPS			VERTICAL RODS			CU. YDS. CONCRETE
				NO.	SIZE	LIN. FT.	NO.	SIZE	LIN. FT.	
30' Light Pole Pedestrian Signal Pole	A	2'-0"	5'-0"	4	#4	23'-0"	6	#4	28'-0"	0.6
40' Light Pole	C	3'-0"	8'-0"	5	#4	44'-2"	8	#6	61'-4"	2.1

SIDE VIEW POLE FOUNDATION BASE DETAIL (SIDEWALK AREAS)

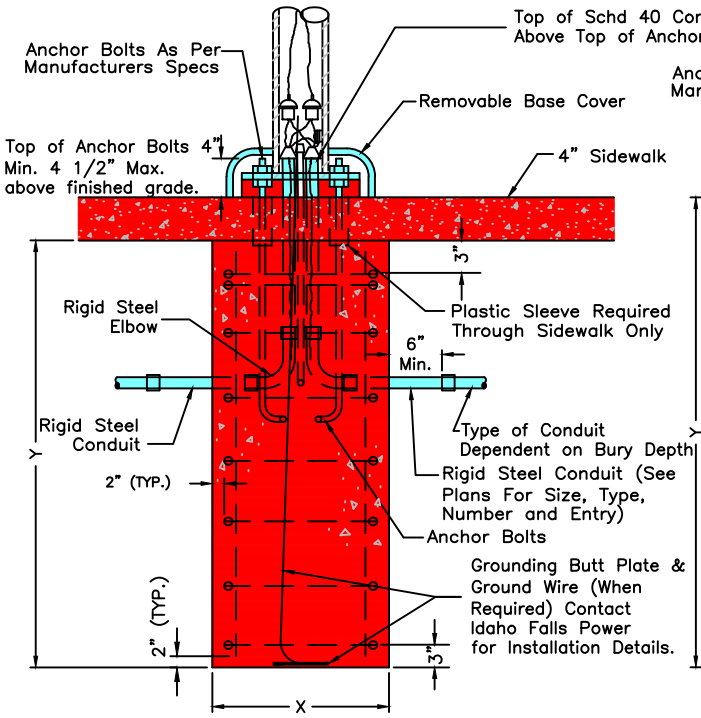

SIDE VIEW POLE FOUNDATION BASE DETAIL (LANDSCAPED AREAS)

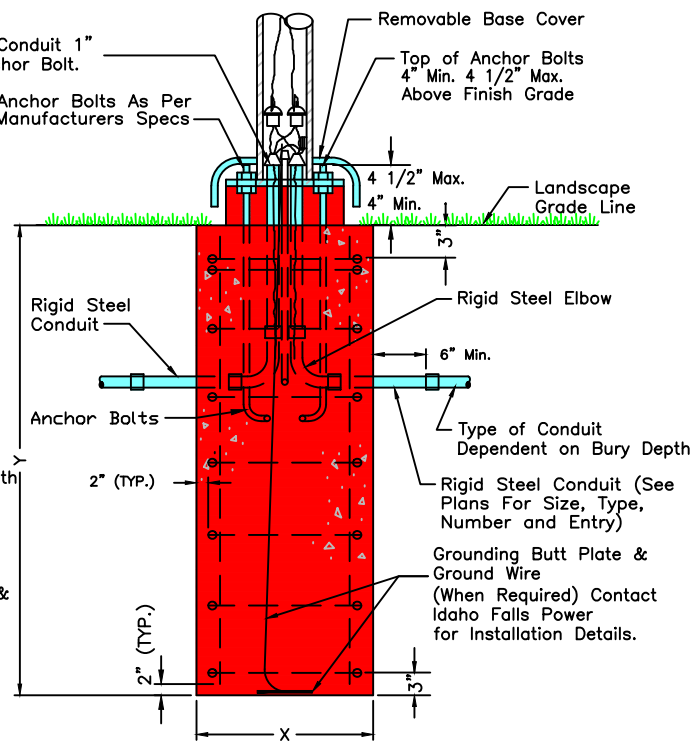

30' LIGHT POLE BASE PATTERN (TYPE A)

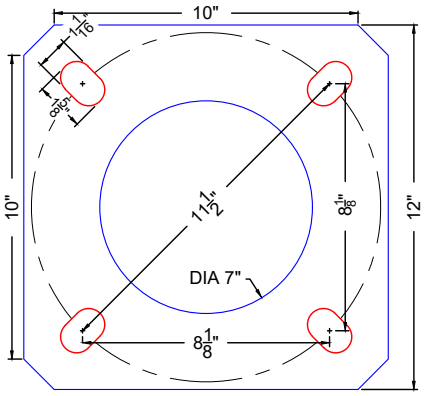

IF PRE-CAST CONCRETE LIGHT POLE IT SHALL MEET OR EXCEED ALL SPECIFICATIONS ABOVE

CONCRETE SHALL BE CLASS 4 CONCRETE (4,000 PSI) SEE SECTION 703.2.4 CONCRETE MIX CITY OF IDAHO FALLS SUPPLEMENTAL ISPWC STANDARDS

IDAHO FALLS POWER

SERVICE POLICY
FIGURE 10
DATE MODIFIED: 01/25/2022

TYPICAL RESIDENTIAL UNDERGROUND SERVICE

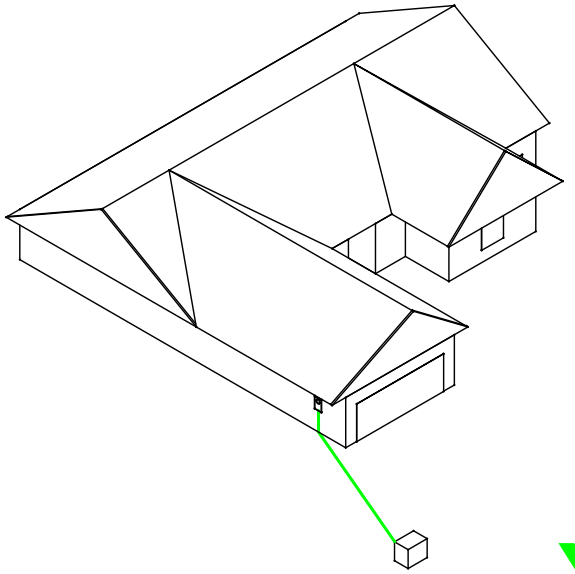

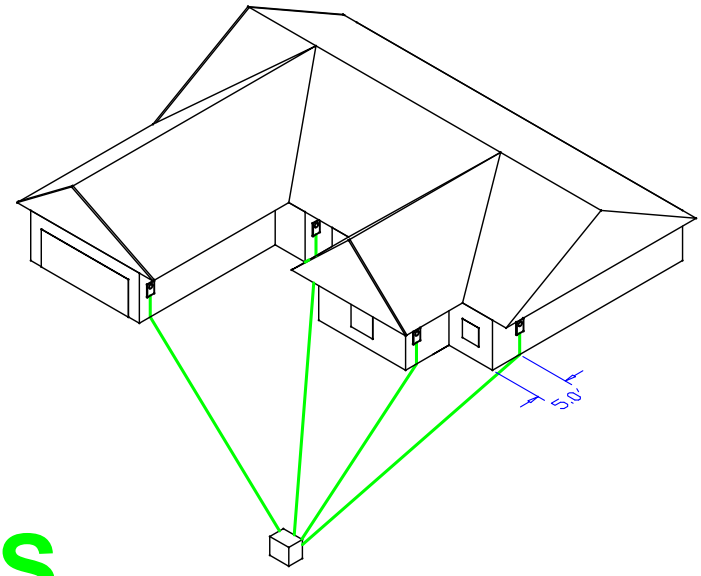

YES

1. Conduit will have a maximum of 360° of bends per run.
2. Idaho Falls Power will inspect all conduit prior to backfilling.
3. Meter must be front yard accessible unless prior IFP approval has been obtained.

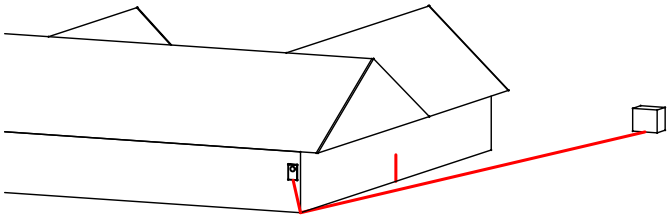

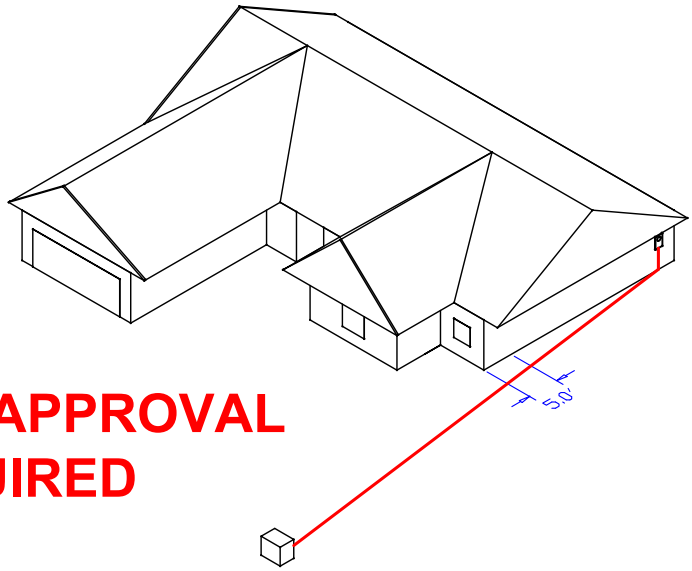

PRIOR IFP APPROVAL REQUIRED

IDAHO FALLS POWER

SERVICE POLICY
FIGURE 11
DATE MODIFIED: 01/15/2019

TYPICAL RESIDENTIAL OVERHEAD SERVICE

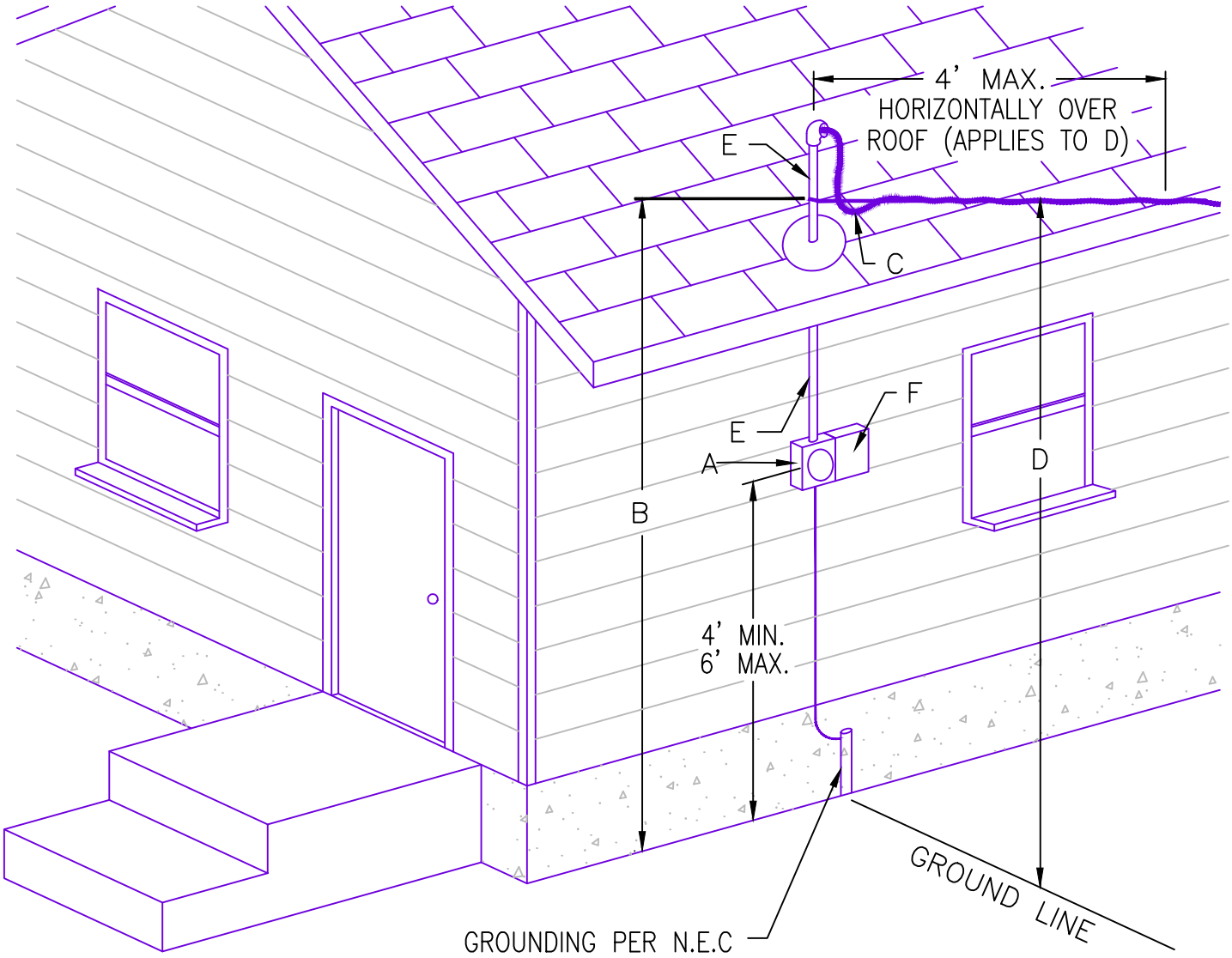

A. Meter location must be approved by Utility prior to installation.
B. Point of attachment 12' minimum above finished grade, or from any platform or projection from which conductors may be reached.
C. The cable and drip loop must be at least 18" above roof. (See NESC Rule note below)
D. 12' above finished grade – 14' over residential driveways – 16' over streets. More if practical.
E. Maximum 3'–6"; Service mast needs to be sized so as to support service conductors with a minimum size of 2" rigid galvanized steel (RGS) or IMC conduit.
F. External Main Disconnect

NOTE: Clearances B, C, D, and E are based on the current National Electrical Safety Code and are applicable where the voltage is limited to 150 volts to ground.

NESC RULE 234C3 covers clearance for services attached to buildings (120/240 volt services)

18" above roof within 6' of weatherhead
36" above roof more than 6' from weatherhead
10' over a deck
3' in any direction from windows
5' from porches, decks, fire escapes, etc

IDAHO FALLS POWER
SERVICE POLICY
FIGURE 12
DATE MODIFIED: 2/5/2021

ELECTRICAL SERVICE REQUIREMENTS

SEPARATION OF METER ASSEMBLIES FOR ELECTRIC AND GAS SERVICES

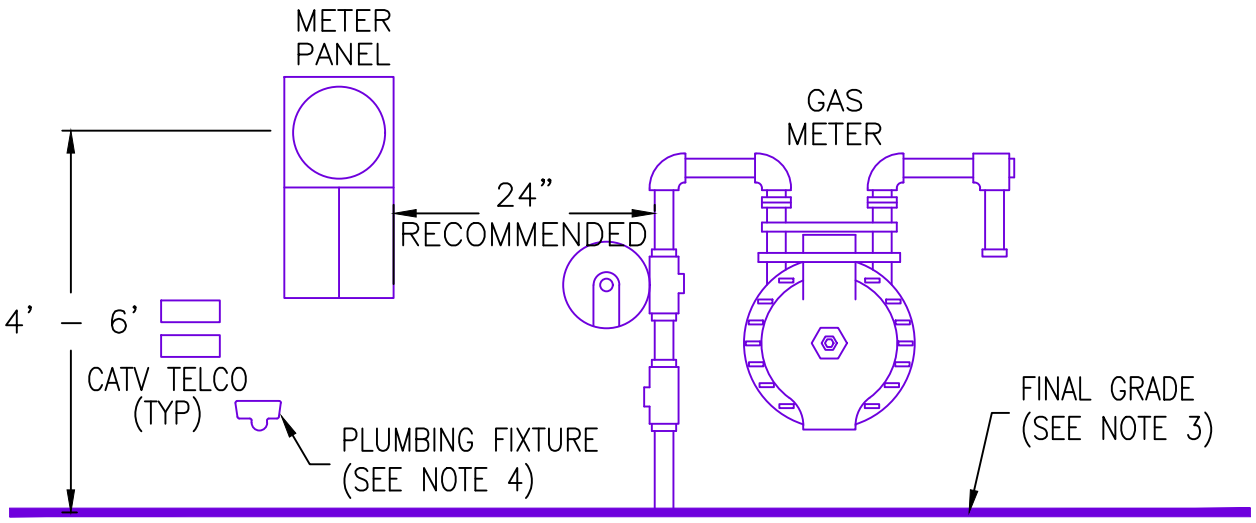

NOTES:

1. Size and dimensions of panels will vary. Drawings are not to scale.
2. This drawing pertains to both overhead and underground electric service applications.
3. Maintain 3' of clear, level and unobstructed work space in front of both meters.
4. Plumbing fixtures which extend more then 6" out from wall surface must be located a safe distance from the outside edge of the meter panel.

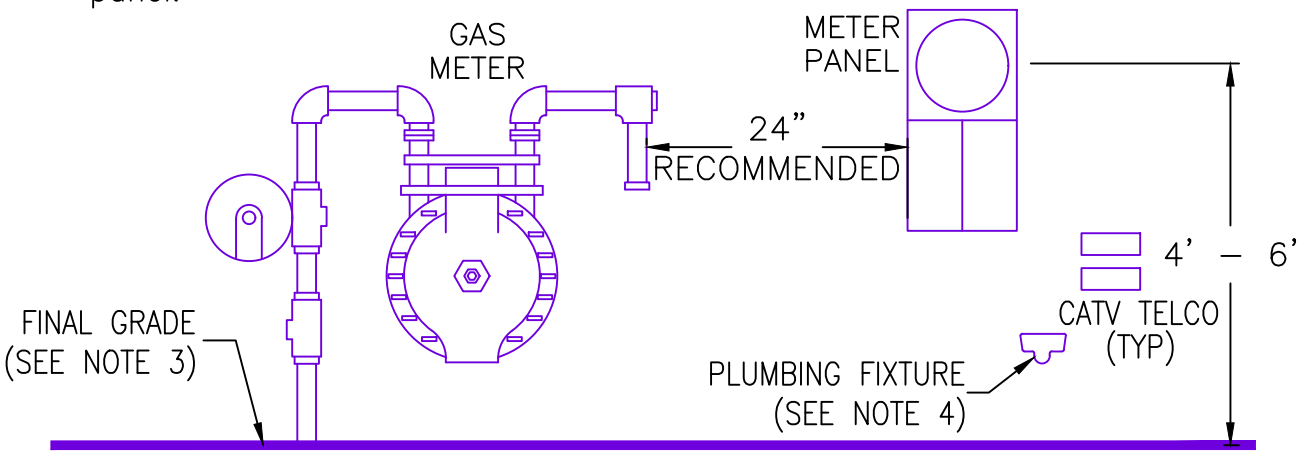

IDAHO FALLS POWER

SERVICE POLICY
FIGURE 13

DATE MODIFIED: 01/03/2019

FREE STANDING METER PANEL

(POST MOUNTED – 1ø)
(RESIDENTAIL UP TO 200 AMPS ONLY)

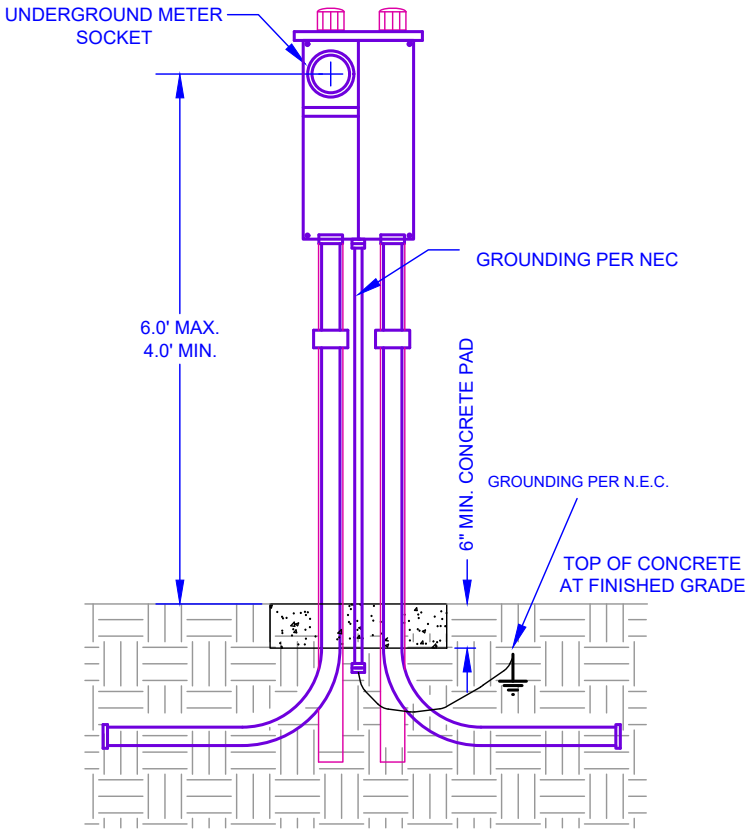

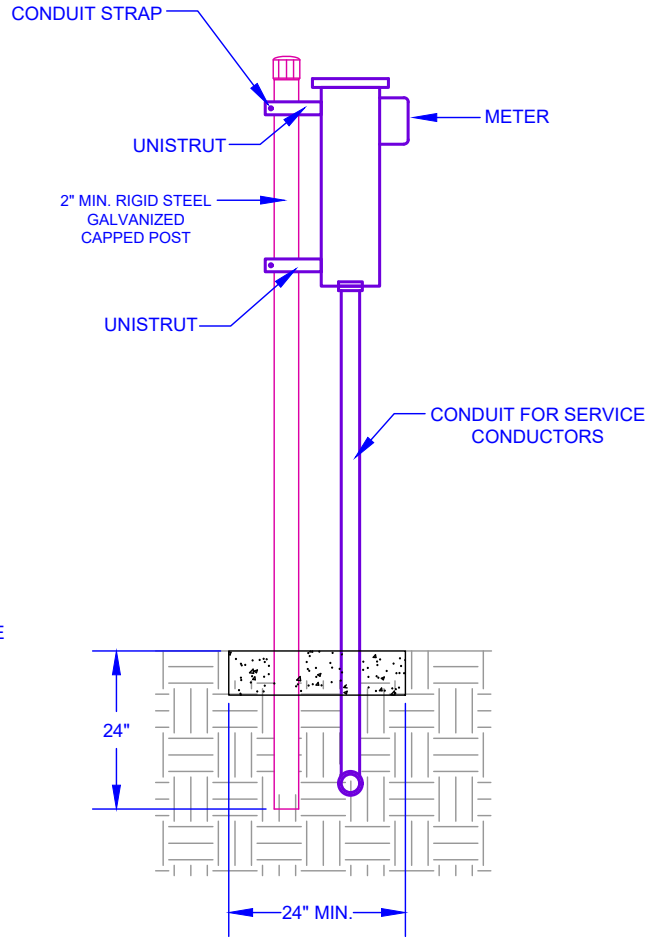

CUSTOMER WILL FURNISH AND INSTALL:

- METER SOCKET ENCLOSURE (UNDERGROUND TYPE)
- PEDESTAL HARDWARE
- CONDUIT
- RIGHT OF WAY
- TRENCH EXCAVATION AND BACKFILL
- GROUNDING PER NEC
- CONCRETE PAD, 24" X 24" X 6" DEEP

ADDITIONAL REQUIREMENTS:

1. WRITTEN APPROVAL FROM THE POWER COMPANY MUST BE OBTAINED BEFORE INSTALLING A FREE STANDING PEDESTAL.

2. THE METER PEDESTAL IS TYPICALLY LOCATED ADJACENT TO, OR IN, THE EASEMENT CLOSE TO THE DRIVEWAY. THE EXACT LOCATION OF THE METER MUST BE SPECIFIED AND/OR APPROVED BY THE POWER COMPANY.

3. REFER TO SERVICE POLICY FOR UNDERGROUND AND CONDUIT REQUIREMENTS.

4. SERVICE CONDUIT MUST BE PLUMB IN ALL DIRECTIONS.

5. METER PANEL SHOWN CAN BE USED IN 3-PHASE APPLICATIONS ONLY WITH WRITTEN APPROVAL FROM IDAHO FALLS POWER.

6. FOR OL LISTED MANUFACTURED PEDESTAL SERVICE ENTRANCES, METER HEIGHT REQUIREMENTS MAY VARY.

IDAHO FALLS POWER

SERVICE POLICY
FIGURE 14
DATE MODIFIED: 12/31/2018

FREE STANDING CT METER

(POST MOUNTED – 1ø OR 3ø)

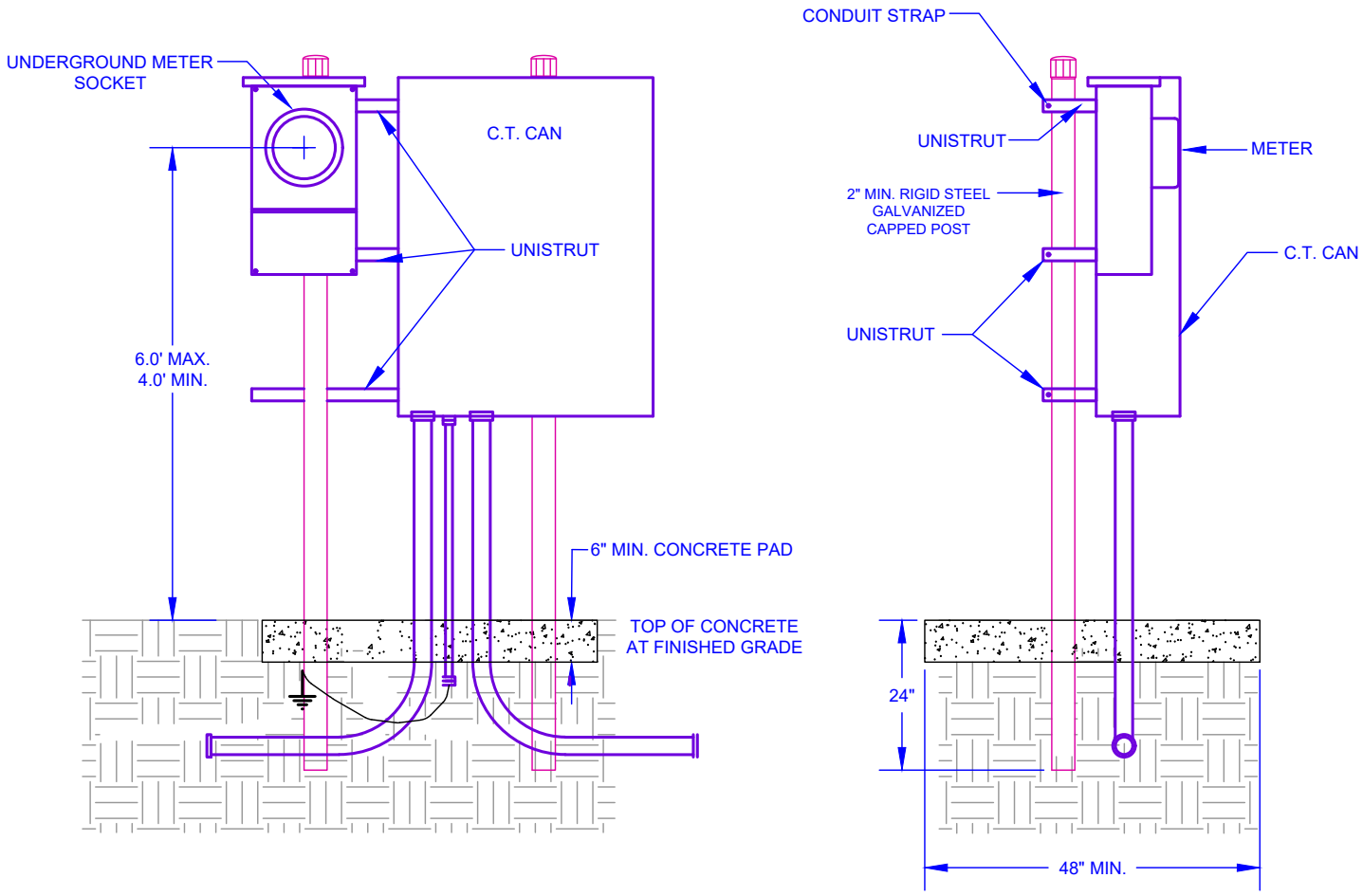

CUSTOMER WILL FURNISH AND INSTALL:

- METER SOCKET ENCLOSURE (UNDERGROUND TYPE)
- PEDESTAL HARDWARE
- CONDUIT
- RIGHT OF WAY
- TRENCH EXCAVATION AND BACKFILL
- GROUNDING PER NEC
- CONCRETE PAD, 48" X 48" X 6" DEEP

ADDITIONAL REQUIREMENTS:

1. WRITTEN APPROVAL FROM IDAHO FALLS POWER MUST BE OBTAINED BEFORE INSTALLING A FREE STANDING PEDESTAL.

2. THE METER PEDESTAL IS TYPICALLY LOCATED ADJACENT TO, OR IN, THE EASEMENT CLOSE TO THE TRANSFORMER. THE EXACT LOCATION OF THE METER MUST BE SPECIFIED AND/OR APPROVED BY IDAHO FALLS POWER.

3. REFER TO SERVICE POLICY FOR UNDERGROUND AND CONDUIT REQUIREMENTS.

4. SERVICE CONDUIT MUST BE PLUMB IN ALL DIRECTIONS.

5. C.T. CAN MUST BE ADJACENT TO METER BASE.

IDAHO FALLS POWER

SERVICE POLICY
FIGURE 15
DATE MODIFIED: 07/31/2013

CT CABINET WITH GROUND SLEEVE (801 - 3999 AMPS)

FOR 4000 AMPS AND ABOVE CONTACT IDAHO FALLS POWER

PLAN VIEW

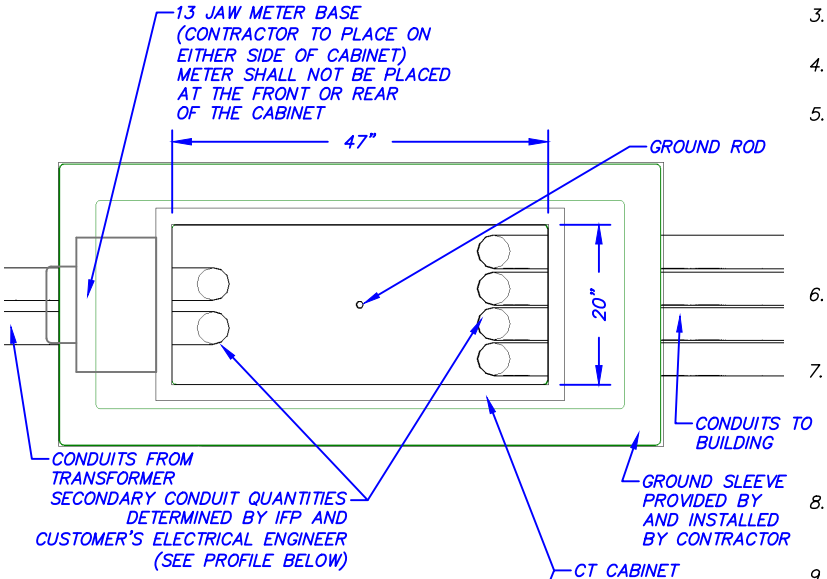

PROFILE VIEW

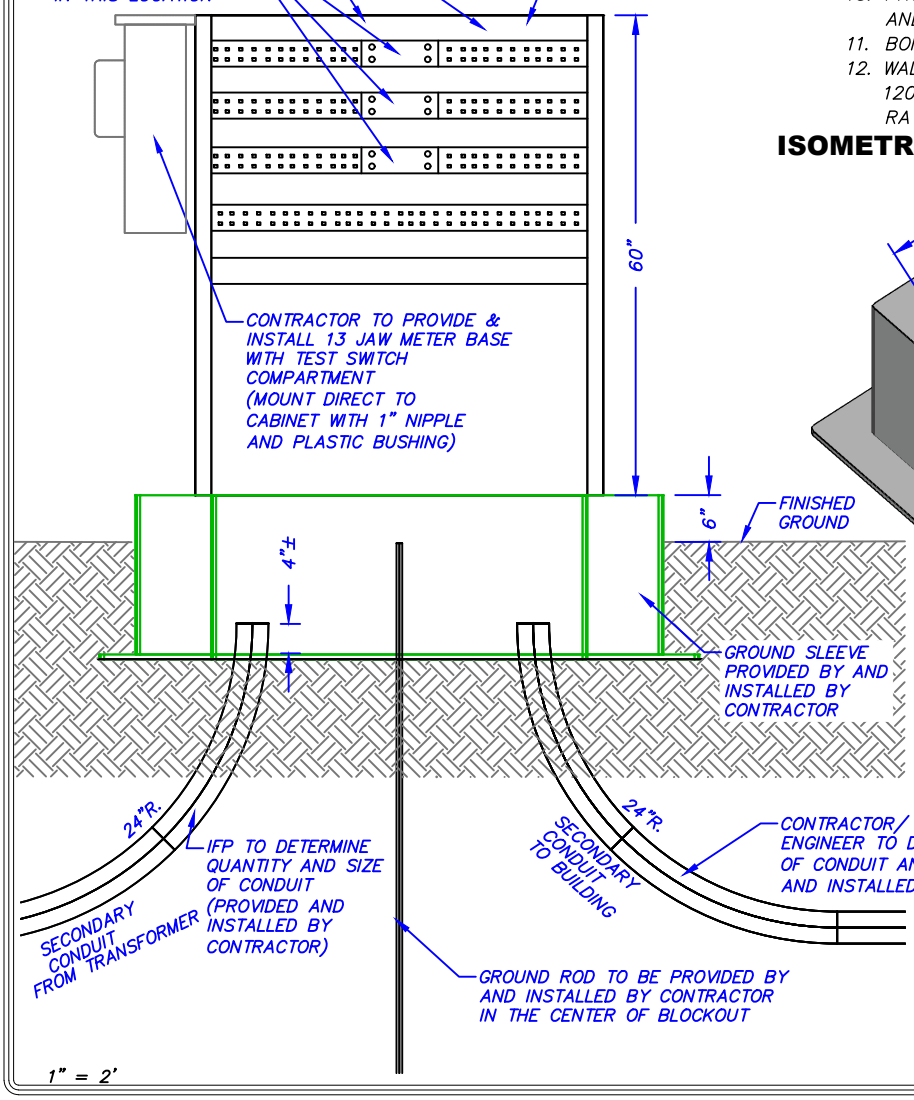

1" = 2'

ADDITIONAL NOTES:

1. INSTALL CONDUITS AS SHOWN IN DETAIL (NUMBER OF CONDUITS AND SIZE WILL VARY PER PLANS.
2. INSTALL BELL ENDS AND CAP ALL CONDUITS.
3. 24" RADIUS ELBOW CAN BE UTILIZED. IDENTIFY ALL CONDUITS FOR ROUTING.
4. CONTRACTOR TO PLACE CONTRACTOR PROVIDED GROUND ROD AS SHOWN IN DETAIL.
5. CONTRACTOR TO PROVIDE AND INSTALL GROUND SLEEVE WITH AN OPENING TO MATCH PROPOSED CABINET AS SHOWN. (A CONCRETE PAD CAN BE UTILIZED INSTEAD OF GROUND SLEEVE BUT MUST HAVE A 18"–24" DEEP CONCRETE VAULT FOR CONDUITS AND MATCH OPENING DIMENSIONS OF CABINET – CONCRETE PAD MUST MEET CT CABINET MANUFACTURER STANDARDS FOR STRENGTH OF THE FULLY LOADED CT CABINET AND BE MIN. 6" ABOVE GRADE)
6. CONTACT IFP FOR INSPECTION. TOP OF THE GROUND SLEEVE (CONCRETE PAD) SHALL BE 6" ABOVE FINISHED GRADE. POSITIVE DRAINAGE MUST BE PROVIDED.
7. CT CABINET WITH SPLIT BUS PER AMERICAN MIDWEST POWER SERVICE CONNECTION CABINET 'SCC' WITH CT PROVISION OR APPROVED EQUAL TO BE PROVIDED AND INSTALLED BY CONTRACTOR. (IDAHO FALLS POWER MUST APPROVE CT CABINET BEFORE ORDERING AND INSTALLING)
8. IDAHO FALLS POWER TO SIZE AND INSTALL SECONDARY CONDUCTOR FROM TRANSFORMER TO CT CABINET. CONTRACTOR MUST SUPPLY TERMINATION LUGS.
9. CONTRACTOR TO SUPPLY AND INSTALL ALL SECONDARY CONDUCTOR FROM CT CABINET TO BUILDING. CONTRACTOR TO PROVIDE AND INSTALL 13 JAW METER BASE WITH TEST SWITCH COMPARTMENT TO BE MOUNTED DIRECTLY TO THE CABINET WITH 1" NIPPLE AND PLASTIC BUSHING.
10. PROVIDE 2' CLEARANCE ON ALL SIDES EXCEPT FRONT PROVIDE 3' AND BE ABLE TO OPEN AT LEAST 90° WITHOUT ANY OBSTRUCTION.
11. BONDING WILL BE REQUIRED IF CONDUIT 90° BEND ARE METALLIC.
12. WALL MOUNTED CT METERING MAY BE ACCEPTABLE FOR UP TO 1200 AMPS SO LONG AS THE WALL MOUNTED CT METERING IS RATED FOR 1200 AMPS AND MEETS ALL UL RATINGS.

ISOMETRIC VIEW OF GROUND SLEEVE

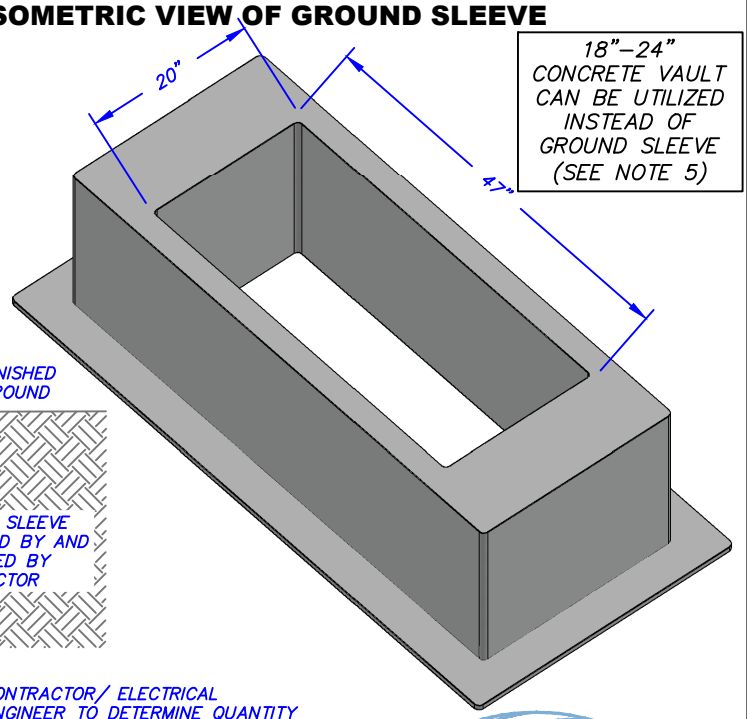

IDAHO FALLS POWER

SERVICE POLICY
FIGURE 16
DATE MODIFIED: 2/1/2021

RISER DETAIL FOR 6" CONDUIT

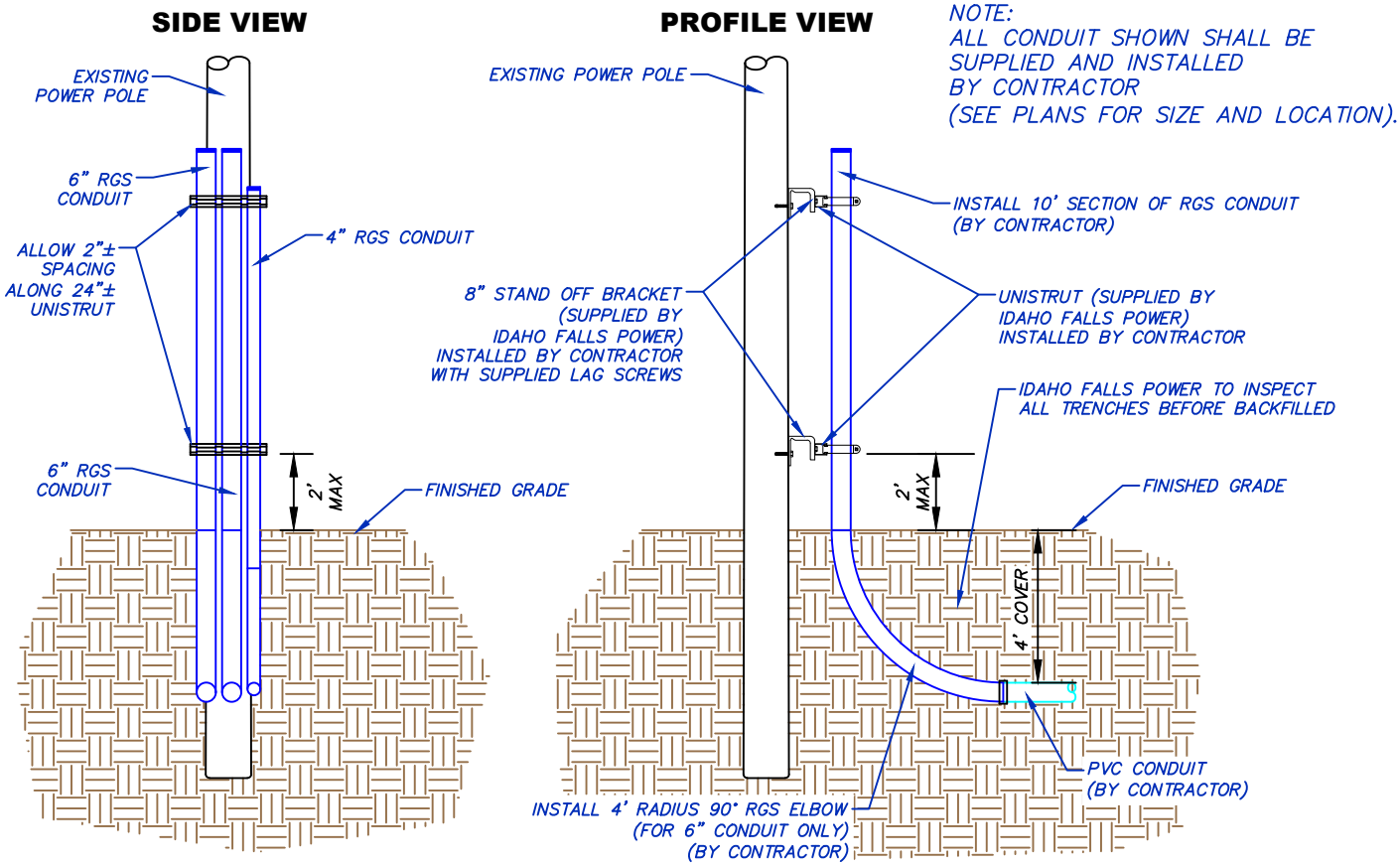

RISER DETAIL FOR 2" - 4" CONDUIT

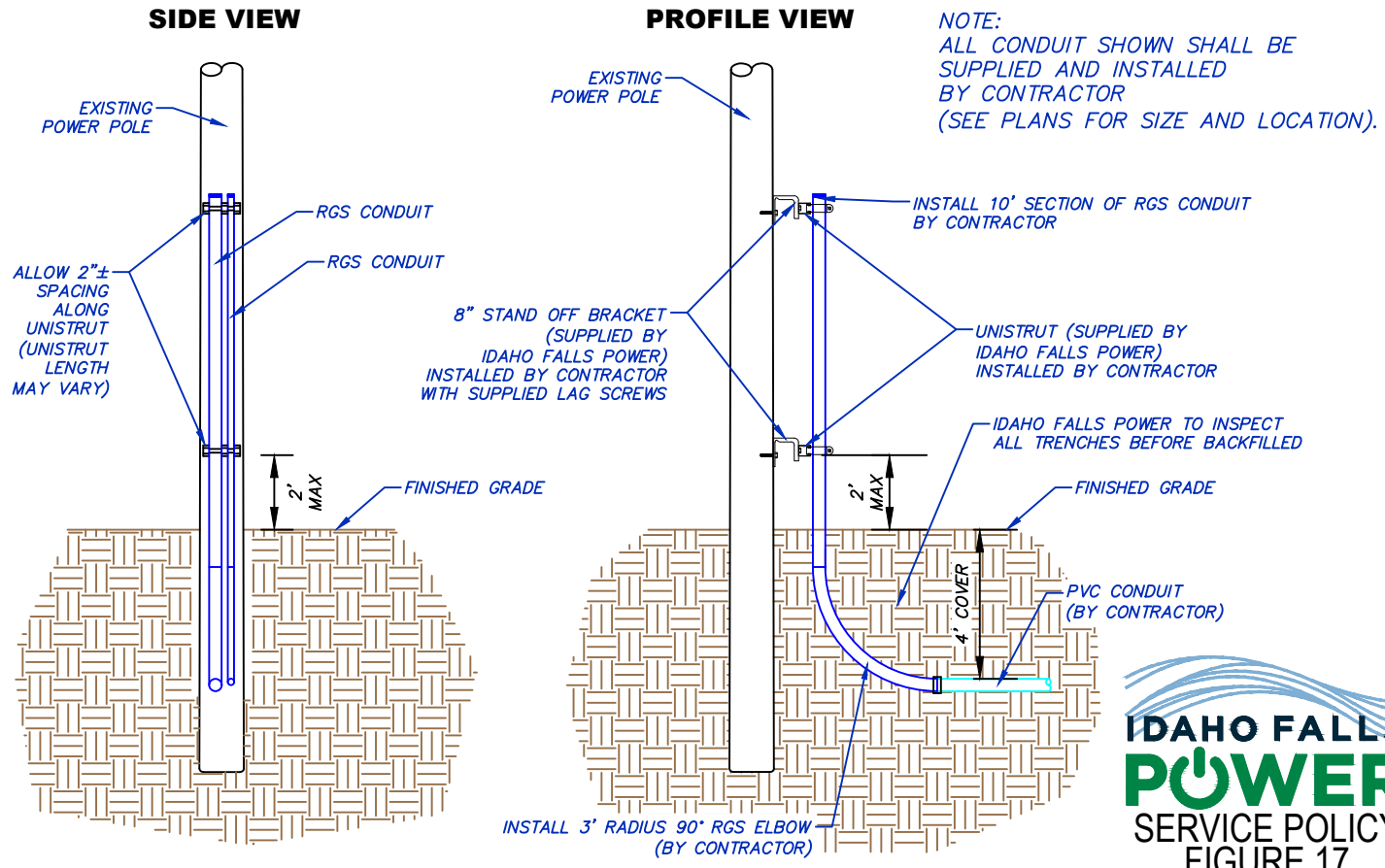

1" = 5'

IDAHO FALLS POWER

SERVICE POLICY
FIGURE 17
DATE MODIFIED: 12/20/2018

OVERHEAD CLEARANCES

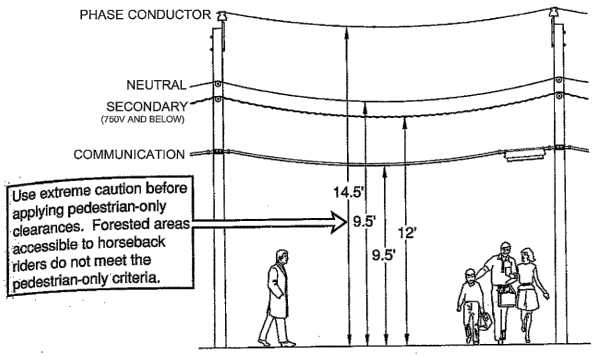

SPACES AND WAYS SUBJECT TO PEDESTRIANS OR RESTRICTED TRAFFIC ONLY

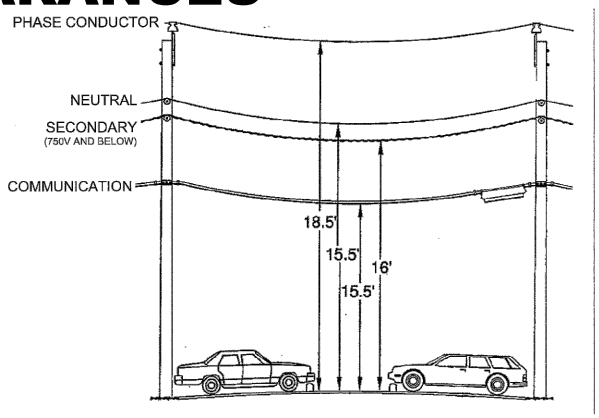

DRIVEWAYS, PARKING LOTS, AND ALLEYS

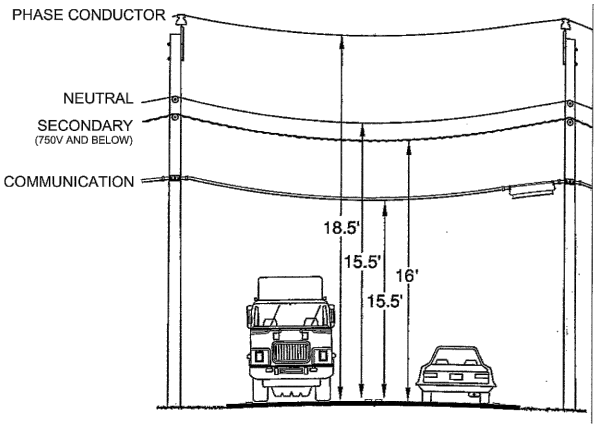

ROADS, STREETS, AND OTHER AREAS SUBJECT TO TRAFFIC

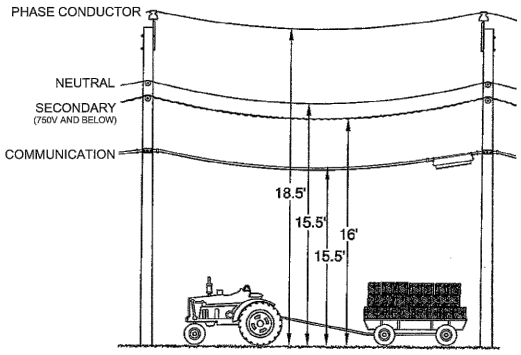

LAND TRAVERSED BY VEHICLES, SUCH AS CULTIVATED, GRAZING, FOREST, ORCHARD, ETC.

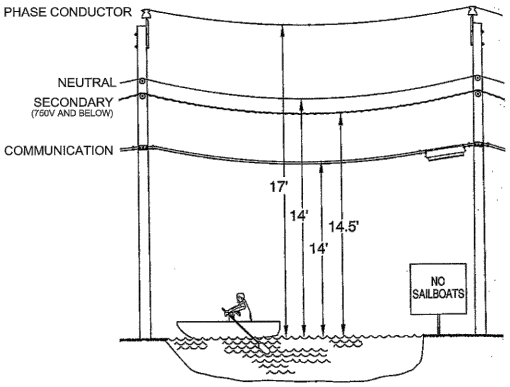

WATER AREAS NOT SUITABLE FOR SAIL BOATING OR WHERE SAILBOATING IS PROHIBITED

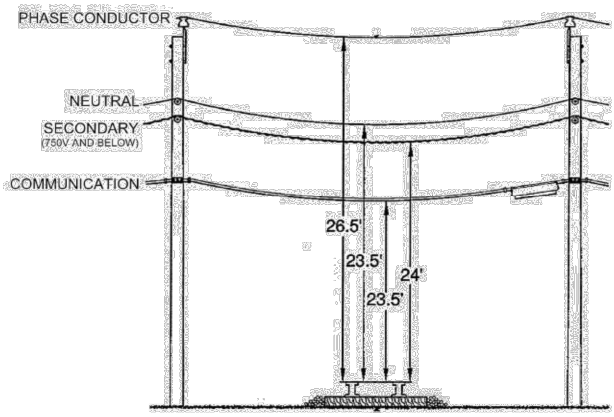

RAILROADS

RULES OF THE NESC AND THE NATIONAL ELECTRIC CODE (NEC) OVERLAP AT THE SERVICE POINT

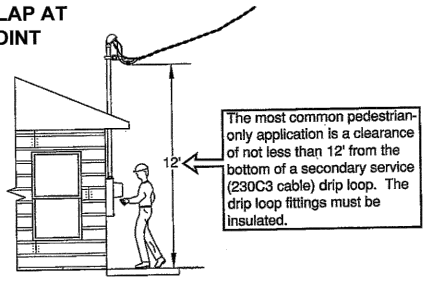

IDAHO FALLS POWER

SERVICE POLICY
FIGURE 18
DATE MODIFIED: 07/31/2013

OPERATION AND CUSTOMER CLEARANCES

Crane / Derrick Transmission Clearance

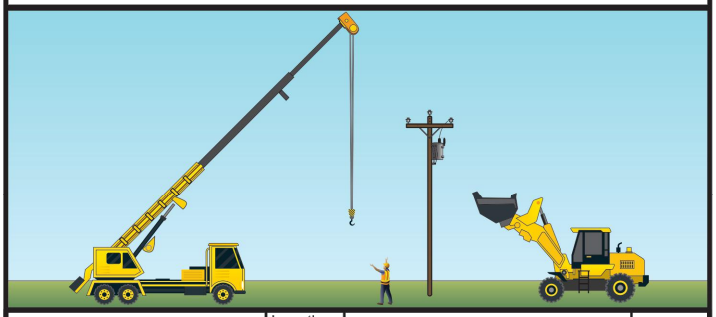

Crane / Derrick	Less than 50kV	Heavy machinery equipment (backhoes, front-end loaders, bulldozer, dump trucks)	Less than 50kV
Must Contact Electric Utility if maximum working radius in the work zone. *See OSHA 1926.1408 (a) (2)*	20 feet	Horizontal Minimum Clearance from. *See OSHA 1926.600 (a) (6)*	10 feet
Minimum Approach Distance, ONLY if Specific Controls in Place. *See OSHA 1926.1408 (a) (2) (iii)*	10 feet	Vertical Minimum Clearance from. *See OSHA 1926.600 (a) (6)*	10 feet

Crane, drilling rig & Mechanized Equipment Clearance

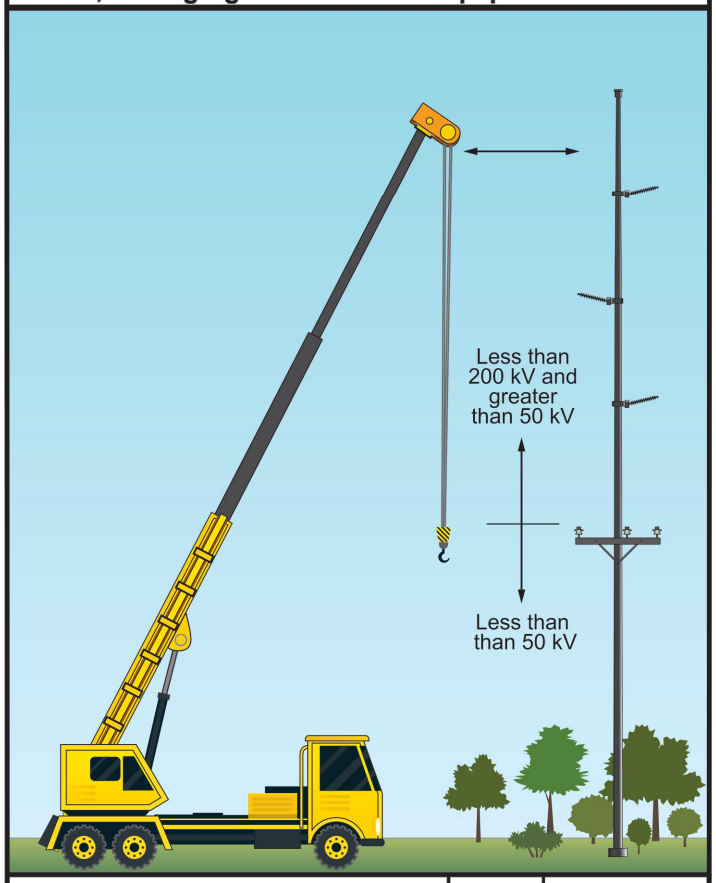

	Less than 50kV	Less than 200kV and Greater than 50
Must Contact Electric Utility if maximum working radius in the work zone. *See OSHA 1926.1408 (a) (2)*	20 feet	20 feet
Minimum Approach Distance, ONLY if Specific Controls in Place. *See OSHA 1926.1408 (a) (2) (iii)*	10 feet	15 feet

Scissor Lift & Scaffolding Clearance

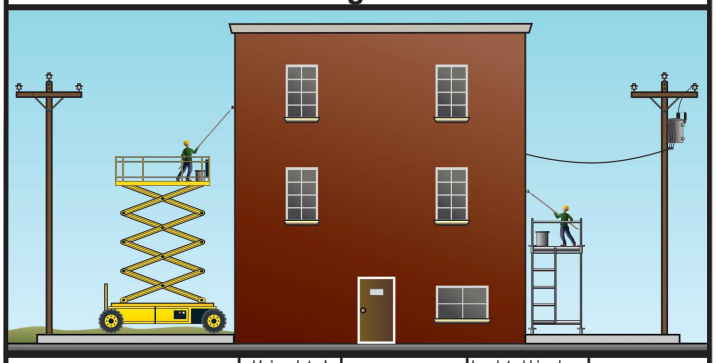

	Uninsulated Neutral Conductor	Insulated Line less than 300 Volts	Insulated Line less than 300 Volts to 750 volts	Uninsulated Lines 750 volts to 25 kV
Distance from Scaffold *See OSHA 1926.451 (f) (4)*	10 feet	3 feet	10 feet	10 feet
Worker or any conductive object *See OSHA 1910.333 (c) (3) (i) (B)*	Avoid Contact	1 feet	1 feet	2 feet

Light / Traffic Signal Pole - Vertical

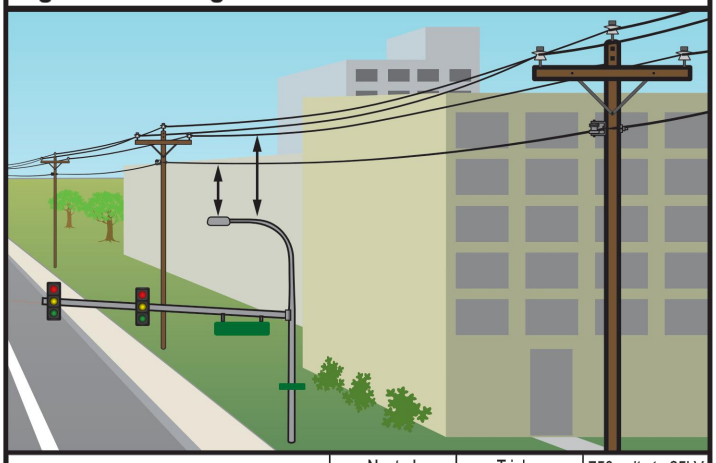

	Neutral	Triplex	750 volts to 25kV
Vertical - NESC 234B2	3 feet	3 feet	4.5 feet

** OSHA Minimum Clearances (typ. 10 ft.) apply when working on Light / Traffic Signal Pole See OSHA 1910.333 (c) (3) (i) (B)*

Light / Traffic Signal Pole - Horizontal

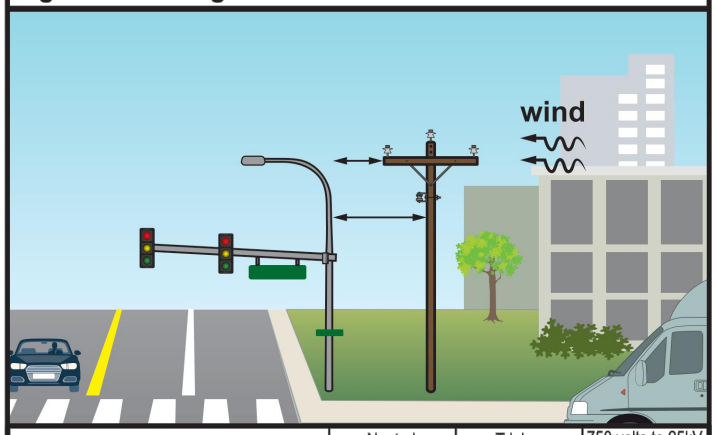

	Neutral	Triplex	750 volts to 25kV
Horizontal - NESC 234B1	3 feet	3 feet	5 feet
Horizontal 50MPH Wind - NESC 234B1	3 feet	3 feet	4.5 feet

** OSHA Minimum Clearances (typ. 10 ft.) apply when working on Light / Traffic Signal Pole See OSHA 1910.333 (c) (3) (i) (B)*

GUIDE FOR OPERATION OF EQUIPMENT NEAR POWER LINES
AND CUSTOMER OWNED POLES TO POWER LINES

SEE NESC AND OSHA FOR DETAILS AND EXCEPTIONS

DRAWING COURTESY OF HI-LINE ENGINEERING

IDAHO FALLS POWER

SERVICE POLICY
FIGURE 19
DATE MODIFIED: 2018

APPLICATION GUIDE FOR 2017 NESC TABLE 232-1

Railroads*

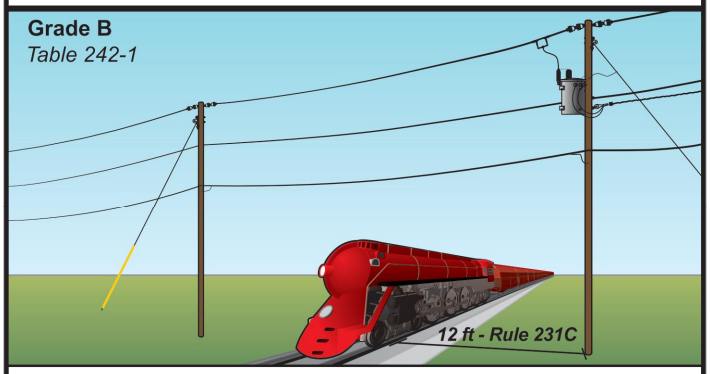

Vertical Clearance at Largest Vertical Sag *Table 232-1*

Neutral or Comm.	Grounded Span Guy	TPX	7.2/12.5 kV	14.4/25 kV	19.9/35 kV
23.5 ft		24.0 ft	26.5 ft		

**Railroad company may require greater clearance*

Trucks Over 8 Feet*

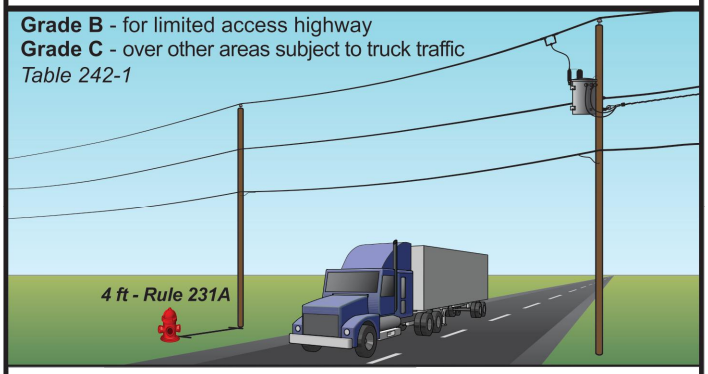

Vertical Clearance at Largest Vertical Sag *Table 232-1*

Neutral or Comm.	Grounded Span Guy	TPX	7.2/12.5 kV	14.4/25 kV	19.9/35 kV
15.5 ft		16.0 ft	18.5 ft		

**DOT may require greater clearance*

Water - No Sailboats

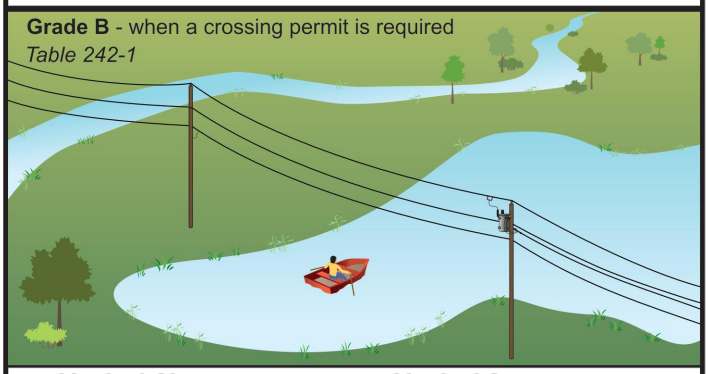

Vertical Clearance at Largest Vertical Sag *Table 232-1*

Neutral or Comm.	Grounded Span Guy	TPX	7.2/12.5 kV	14.4/25 kV	19.9/35 kV
14.0 ft		14.5 ft	17.0 ft		

**see NESC for sailboat clearances*

Over fields, orchards, forest, etc.

Vertical Clearance at Largest Vertical Sag *Table 232-1*

Neutral or Comm.	Grounded Span Guy	TPX	7.2/12.5 kV	14.4/25 kV	19.9/35 kV
15.5 ft		16.0 ft	18.5 ft		

**used by vehicles over 8 feet tall or riders on horseback*

Pedestrians Only*

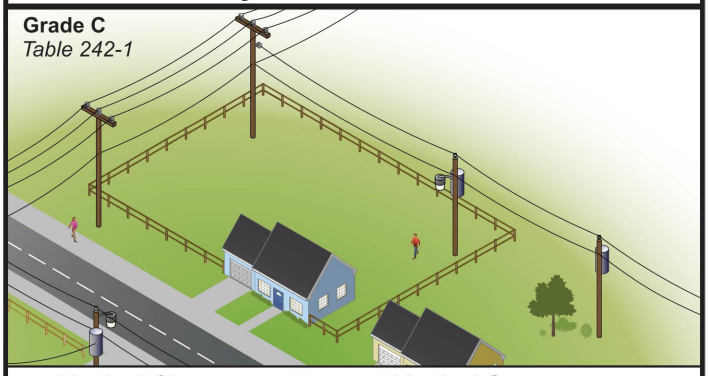

Vertical Clearance at Largest Vertical Sag *Table 232-1*

Neutral or Comm.	Grounded Span Guy	TPX	7.2/12.5 kV	14.4/25 kV	19.9/35 kV
9.5 ft		12.0 ft	14.5 ft		

**Not normally used by trucks or riders on horseback (very steep hills, swamps, etc.)*

Oversized Vehicles - greater than 14 feet in height

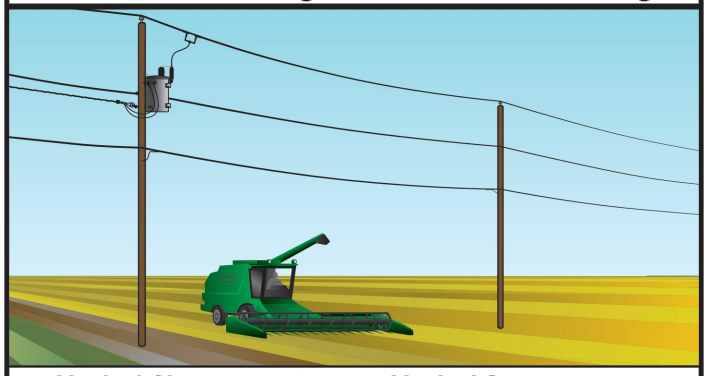

Vertical Clearance at Largest Vertical Sag *Table 232-1*

Neutral or Comm.	Grounded Span Guy	TPX	7.2/12.5 kV	14.4/25 kV	19.9/35 kV
X + 1.5 ft		X + 2 ft	X + 4.5 ft		

X = Known Height of oversized vehicle

SEE NESC AND OSHA FOR DETAILS AND EXCEPTIONS

DRAWING COURTESY OF HI–LINE ENGINEERING

IDAHO FALLS POWER

SERVICE POLICY
FIGURE 20
DATE MODIFIED: 2016

APPLICATION GUIDE FOR 2017 NESC

Clearance Over* or Near Grain Bins Loaded by Portable Auger NESC 234F2

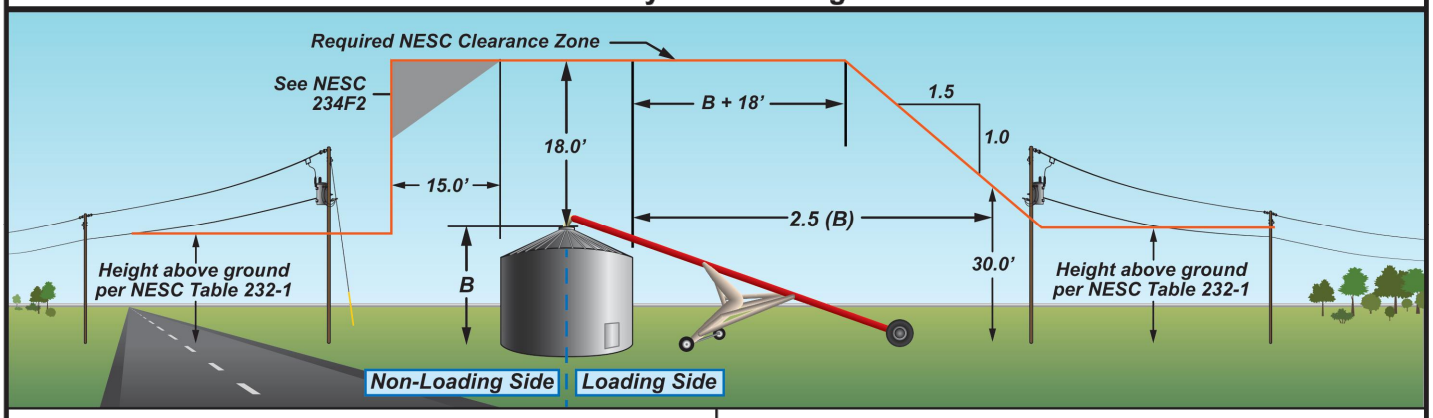

B = Vertical height to highest filling or probing port

Note: If B > 12 feet, vertical height of conductors is 30 feet at a distance equal to 2.5 times B

*Largest vertical sag

Non-Loading Side is when use of portable auger is limited by:

1. Permanent building/structure
2. Physical obstruction
3. Public road or other right of way
4. Designation or agreement

Clearance Over* or Near Swimming Pools NESC 234E1

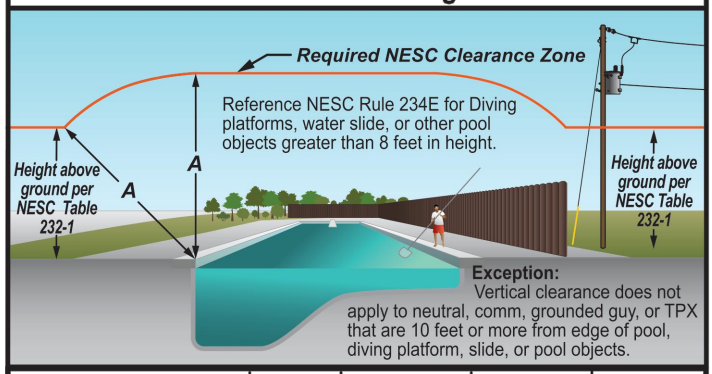

Neutral	TPX	7.2/12.5 kV	14.4/25 kV	19.9/35 kV
22.0 ft	22.5 ft	25.0 ft		

*Largest vertical sag

Aboveground pool with deck or ladder, clearance is from highest point upon which people can stand.

Clearance Over* or Near Billboards NESC 234C

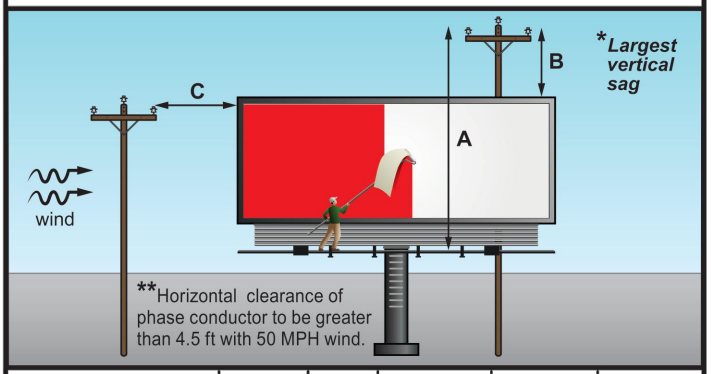

	Neutral	TPX	7.2/12.5kV	14.4/25kV	19.9/35kV
A-Where personnel walk	10.5 ft	11.0 ft	13.5 ft		
B - Other Surface	3.0 ft	3.5 ft	8.0 ft		
C - Horizontal**	4.5 ft	5.0 ft	7.5 ft		

Vertical Clearance Over* Buildings NESC 234C

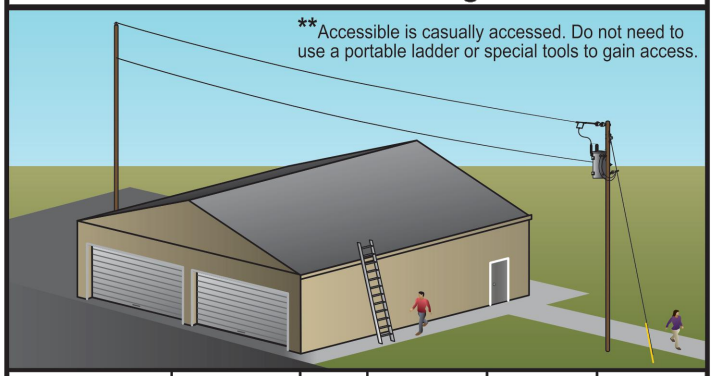

Roof	Neutral	TPX	7.2/12.5kV	14.4/25kV	19.9/35kV
Accessible**	10.5 ft	11.0 ft	13.5 ft		
Non-Accessible	3.0 ft	3.5 ft	12.5 ft		

*Largest vertical sag

Horizontal Clearance Adjacent to Buildings NESC 234C

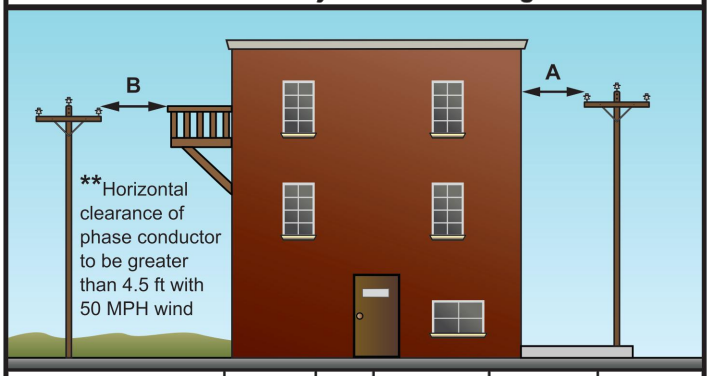

	Neutral	TPX	7.2/12.5kV	14.4/25kV	19.9/35kV
A-To Walls**	4.5 ft	5.0 ft	7.5 ft		
B - Accessible Areas**	4.5 ft	5.0 ft	7.5 ft		

SEE NESC AND OSHA FOR DETAILS AND EXCEPTIONS

DRAWING COURTESY OF HI-LINE ENGINEERING

IDAHO FALLS POWER

SERVICE POLICY
FIGURE 21
DATE MODIFIED: 2016

GROUND CLEARANCES 2017 NESC

2017 NESC GROUND CLEARANCE
FOR 120/240V TRIPLEX SERVICE DROPS
REFERENCE NESC TABLE 232-1 AND FOOTNOTES

CLEARANCE AT WORSE CASE FINAL SAG 32 F WITH ICE 120 F

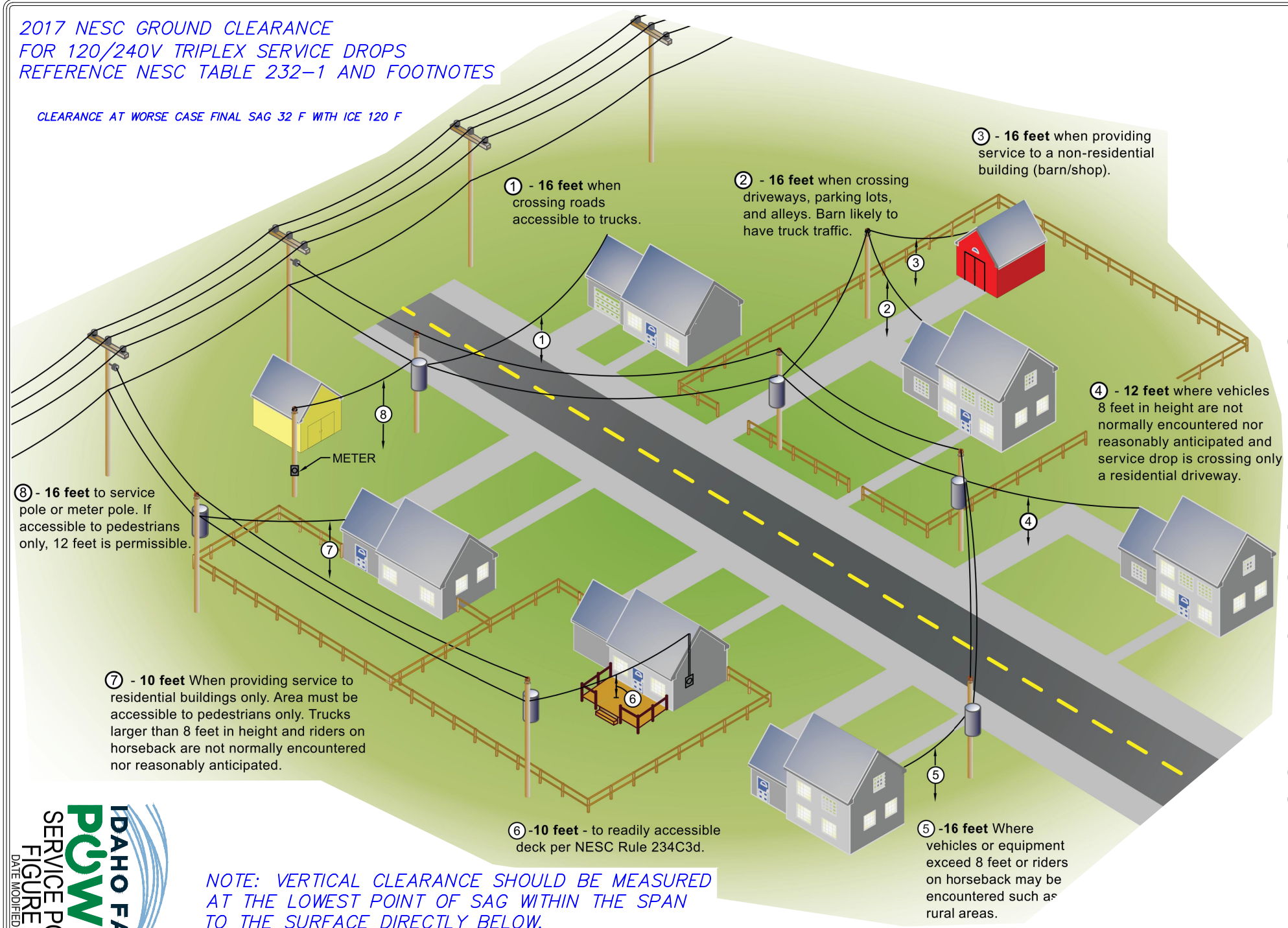

NOTE: VERTICAL CLEARANCE SHOULD BE MEASURED AT THE LOWEST POINT OF SAG WITHIN THE SPAN TO THE SURFACE DIRECTLY BELOW.
TRUCKS ARE DEFINED AS ANY VEHICLE EXCEEDING 8 FEET IN HEIGHT.

DRAWING COURTESY OF HI-LINE ENGINEERING

IDAHO FALLS POWER
SERVICE POLICY
FIGURE 22
DATE MODIFIED: 2016

COMMUNICATION CABLE CLEARANCES

SUMMARY OF NESC CLEARANCES TO COMMUNICATION CABLES

SEE NESC AND OSHA FOR DETAILS AND EXCEPTIONS

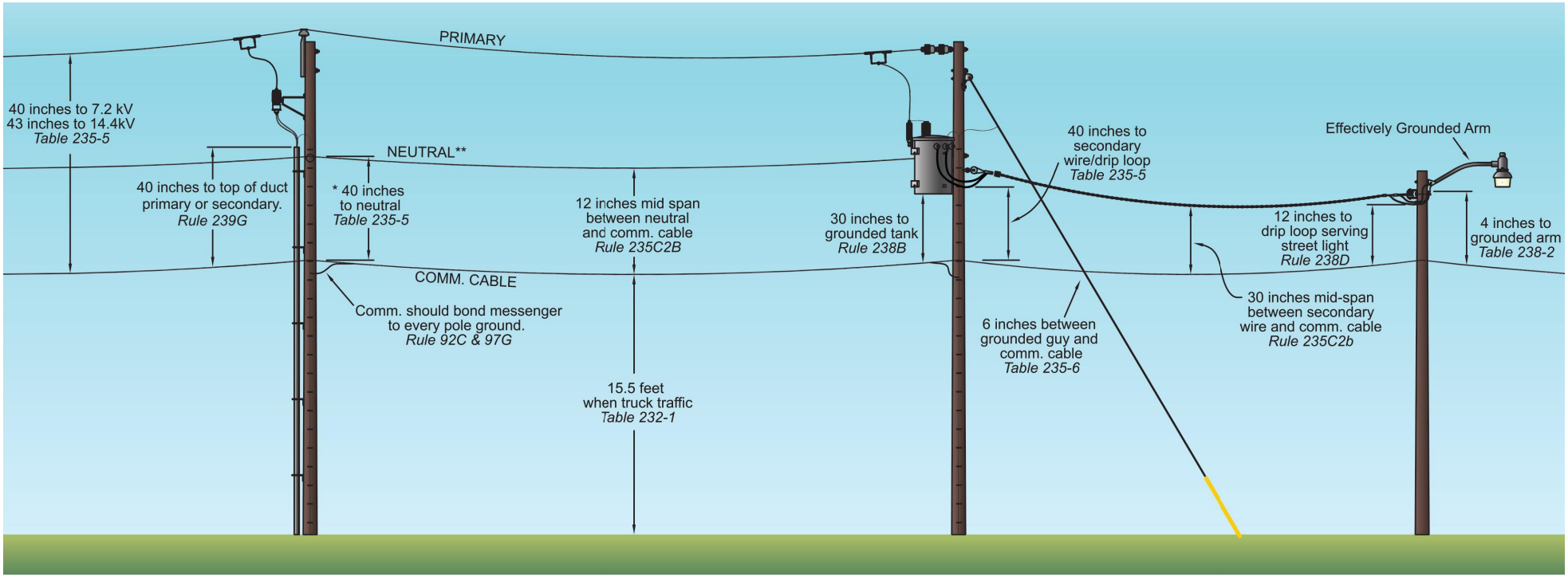

* 30 INCHES IS ALLOWED IF THE COMMUNICATION MESSENGER IS BONDED TO THE NEUTRAL THROUGHOUT THE SERVICE AREA. TABLE 235–5

** FIBER OPTIC CABLES IN THE SUPPLY SPACE (RULE 224A) WILL HAVE THE SAME REQUIRED CLEARANCE TO COMMUNICATION CABLES IN THE COMMUNICATION SPACE AS A MULT–GROUNDED NEUTRAL (RULE 235C)

A COMMUNICATION WORKER SAFETY ZONE IS 40 INCHES OF CLEARANCE BETWEEN COMMUNICATION LINES AND SUPPLY LINES / EQUIPMENT PER RULE 235C4 & 238E

DRAWING COURTESY OF HI–LINE ENGINEERING

IDAHO FALLS POWER
SERVICE POLICY
FIGURE 23
DATE MODIFIED: 2016

BOLLARD DETAIL

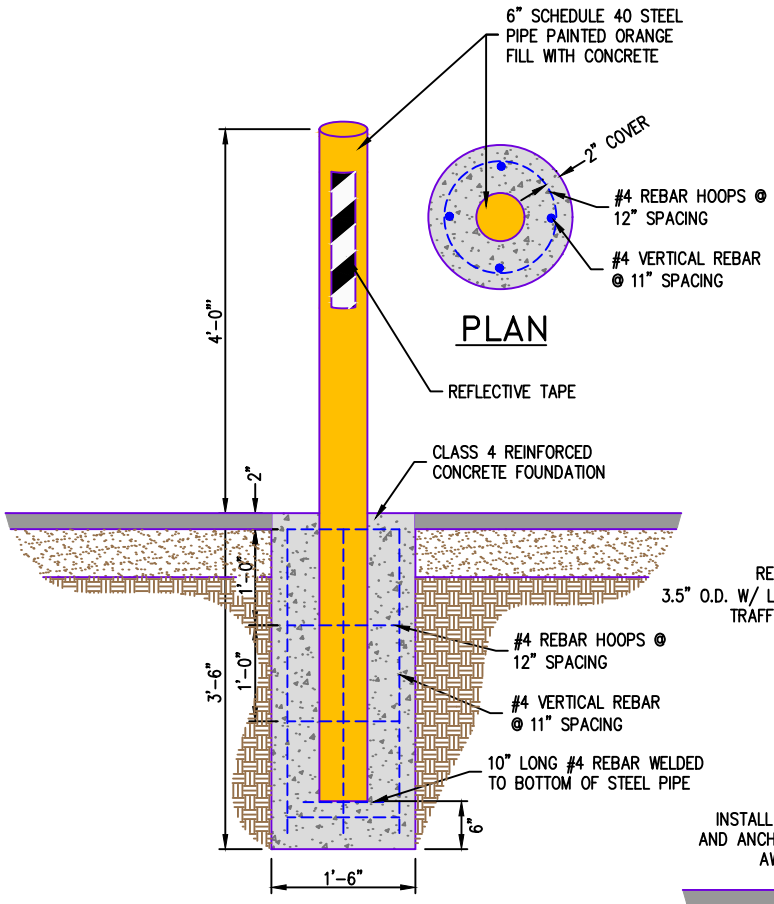

PERMANENT BOLLARD

SCALE – 1"=2'

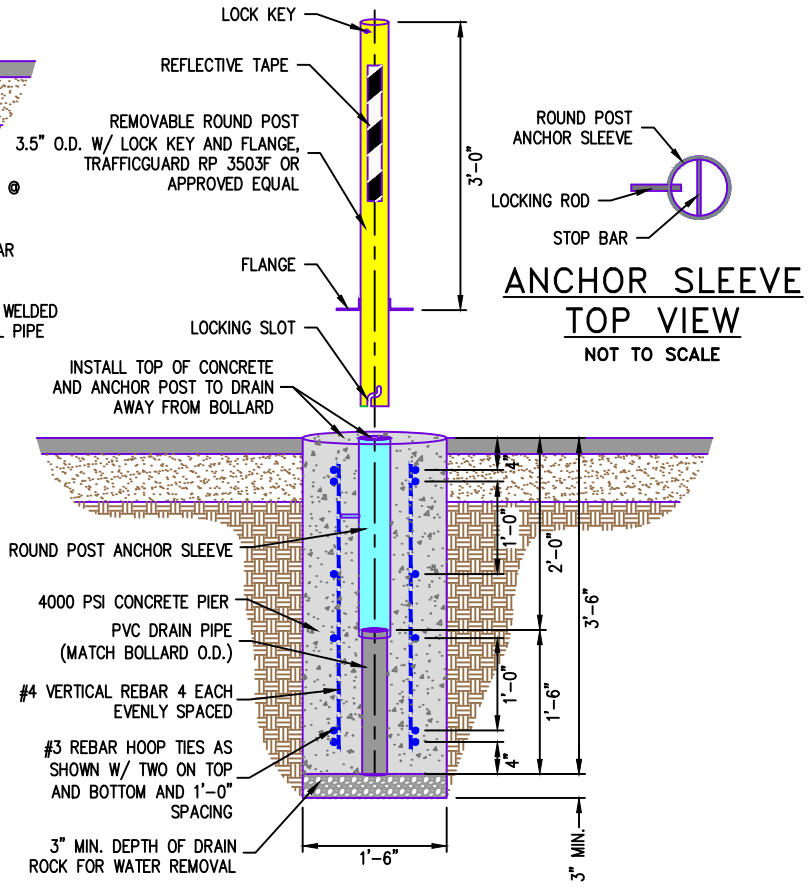

REMOVABLE BOLLARD

SCALE – 1"=2'

IDAHO FALLS POWER

SERVICE POLICY

FIGURE 24

DATE MODIFIED: 12/18/2009

ELECTRICAL VEHICLE PEDESTAL FOUNDATION PAD

(SIEMENS VERSICHARGE)

TOP VIEW

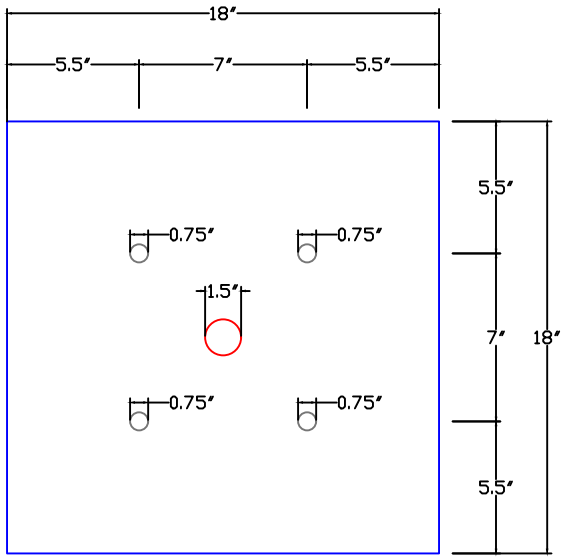

SIDE VIEW

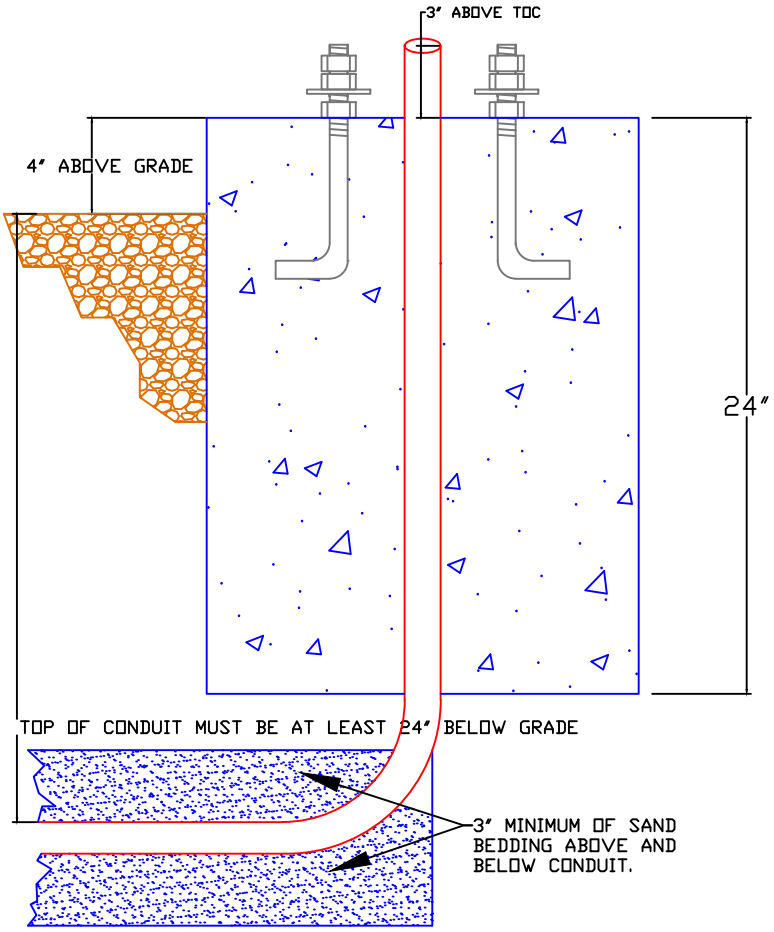

ADDITIONAL COMMENTS:

1. THIS SPECIFICATION IS FOR SIEMENS VERSICHARGE (VC30GRYU AND VCSG30GRYUW) WITH A VCPOST STATION POST.
2. INSTALL CONDUITS TO WITHIN 3" ABOVE CONCRETE PAD.
3. CONDUIT SHALL BE 1.5" DIAMETER.
4. INSTALL BELL ENDS AND CAP ALL CONDUITS.
5. THE PAD LOCATION SHALL BE COMPACTED TO A MINIMUM OF 95% OF MAXIMUM DENSITY PRIOR TO PLACEMENT OF CONCRETE.
6. THE ELECTRIC VEHICLE PEDESTAL SHALL NOT BE INSTALLED UNTIL THE CONCRETE HAS CURED A MINIMUM OF (7) DAYS. IF THE TEMPERATURE IS EXPECTED TO DROP BELOW 40°F, THERMAL BLANKETS MUST BE USED FOR A MINIMUM PERIOD OF 72 HOURS.
7. DO NOT PLACE PAD ON THE FROZEN EARTH.
8. TOP OF THE ELECTRIC VEHICLE PEDESTAL PAD SHALL BE CONSTRUCTED TO A MINIMUM OF 4" ABOVE FINISHED GRADE.
9. THE WIRE MUST PROTRUDE 72" FROM THE SURFACE OF THE CONCRETE. USE #6 AWG, 75°C COPPER WIRE TO CONNECT TO SUPPLY CIRCUIT.
10. RECOMMEND USING 4x3/8"–16 S/S L–HOOK 8" ANCHOR BOLTS. THE CENTER OF
11. THE PAD MUST BE PLACED MINIMUM 36" BEHIND THE CURB IF THERE IS NO WHEEL STOP OR MINIMUM 12" BEHIND THE CURB IF THERE IS A WHEEL STOP.
12. CONSULT ELECTRICIAN FOR TYPE OF CONDUIT TO BE USED.
13. CONSULT MANUFACTURER FOR MOUNTING AND ASSEMBLY INSTRUCTIONS.

IDAHO FALLS POWER

SERVICE POLICY
FIGURE 25

DATE MODIFIED: 01/15/2019

ELECTRICAL VEHICLE CHARGER ASSEMBLY INSTRUCTIONS

SIEMENS

Assembly Instructions

1. Make sure power to the circuit is off before beginning assembly
2. See last page for mounting the post and leveling instructions below, feed wiring through the post out of circular cutout
3. Attach the mid-panel to the enclosure using qty 4 x #10-32 X 3/8", tamper resistant screws
4. Attach the enclosure to the post using qty 3 x #10-32 X 3/8", button head socket cap screws and qty 1 x #10-32 X 3/8", tamper resistant screw, install bushing, feed wiring into the enclosure and out of the mid-panel
5. Attach the U-bracket to the mid-panel using qty 2 x #10-32 X 3/8", button head socket cap screws
6. Attach the wall mount bracket to the mid-panel using qty 2 x #10-32 X 3/8", button head socket cap screws
7. Hardwire VersiCharge (see "VersiCharge Wiring Instructions" below)
8. Slide the VersiCharge into the wall mount bracket
9. Attach the enclosure top to the enclosure using qty 2 x #10-32 X 3/8", tamper resistant screws, a padlock (sold separately) may be used to supplement connection
10. Replace four cover Phillips closure screws with qty 4 x #8-32 X 3/4", tamper resistant screws
11. Restore power, charger will turn on

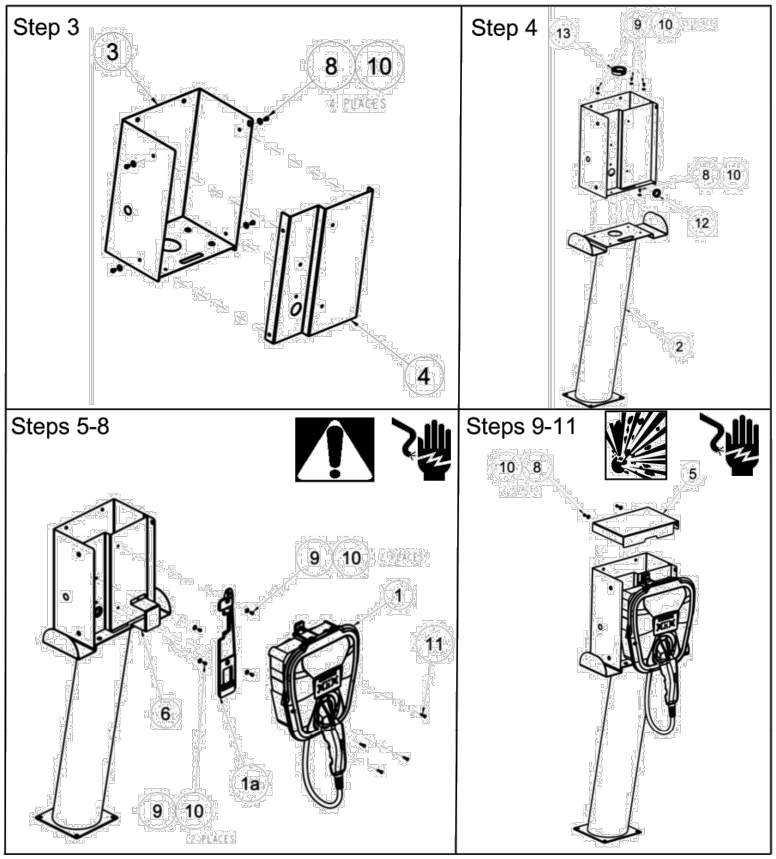

VersiCharge Wiring Instructions

Please consider all safety warnings in the VersiCharge Installation and Operation manual (document # 813776) prior to wiring. The post product is compatible with the VC30GRYU product and the VCSG30GRYUW product. To reduce the risk of fire, connect only to a circuit provided with 40 amperes maximum branch circuit overcurrent protection in accordance with the ANSI/NFPA 70 National Electrical Code. VersiCharge EV charging stations can draw up to 30A at 240 VAC, 50/60 Hz (7.2kW of power). Use 6-8 AWG, 75°C copper wire to connect to supply circuit. Refer to section 3.4 of the VersiCharge Installation and Operations Manual for instruction on removing the cord-and-plug assembly and steps for hardwired installation. Ensure breaker is off during all electrical work.

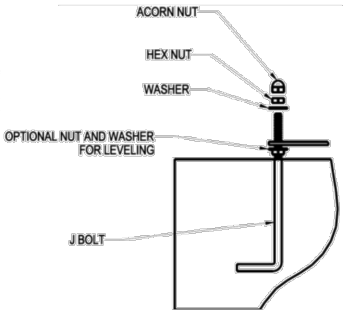

Leveling

Should the concrete pad not be level, hex nuts and washers may be placed between post and concrete pad. This method will cause a gap between the base of the post and cement, increase conduit height above cement accordingly (minimum of 3"). See next page for post mounting instructions.

© 2015 Copyright Siemens Industry, Inc.

® The National Electrical Code is a registered trademark of the National Fire Protection Association

IDAHO FALLS POWER

SERVICE POLICY
FIGURE 26
DATE MODIFIED: 06/26/2016

ELECTRICAL VEHICLE CHARGER MOUNTING INSTRUCTIONS

SIEMENS

7"

7"

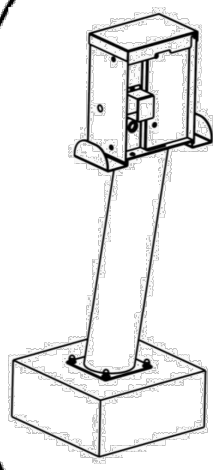

Concrete Mounting Instructions

This page is scaled 1:1 relative to the bottom of the post, item 2. The center of the post must be placed minimum 36" behind the curb if there is no wheel stop or minimum 12" behind the curb if there is a wheel stop. Installation of the post is dependent upon application (parking deck, lot, curbside, etc.) but in general at least 2.25" of qty 4 x 3/8"-16 threaded bolts must protrude from the selected mounting surface in the orientation shown (7" x 7" square). Mounting hardware is sold separately. Suggested hardware consists of qty 4 x 3/8"-16 S/S L-hook 8" anchor bolts, at least qty 4 x 3/8"-16 S/S nylon insert nuts and washers. If leveling is required, it is suggested to use qty 8 nuts. Acorn nuts are suggested to be used as a safety precaution, but are not required. Suggested concrete pad size is minimum 16" diameter circle, or minimum 18" square, with a minimum depth of at least 24". Bolts are inserted into cement at the locations shown below (ensure the bolts are perpendicular relative to mounting surface). Cable in an approved electrical conduit is run from the power source, through the cement, emerging within the designated area shown below. The electrical conduit must protrude at least 3" from the surface of the concrete. Consult NEC when deciding upon appropriate electrical conduit for your application. The wire must protrude 72" from the surface of the concrete. Refer to section 3.4 of the VersiCharge Installation and Operations Manual for instruction on removing the cord-and-plug assembly and stripping wires. Use 6-8 AWG, 75°C copper wire to connect to supply circuit.

3/8" CONRETE MOUNTING
HARDWARE NOT SUPPLIED

© 2015 Copyright Siemens Industry, Inc.

® The National Electrical Code is a registered trademark of the National Fire Protection Association

IDAHO FALLS POWER

SERVICE POLICY
FIGURE 27
DATE MODIFIED: 06/26/2016

WIRELESS ANTENNA STEEL STREET LIGHT (PADMOUNTED EQUIPMENT)

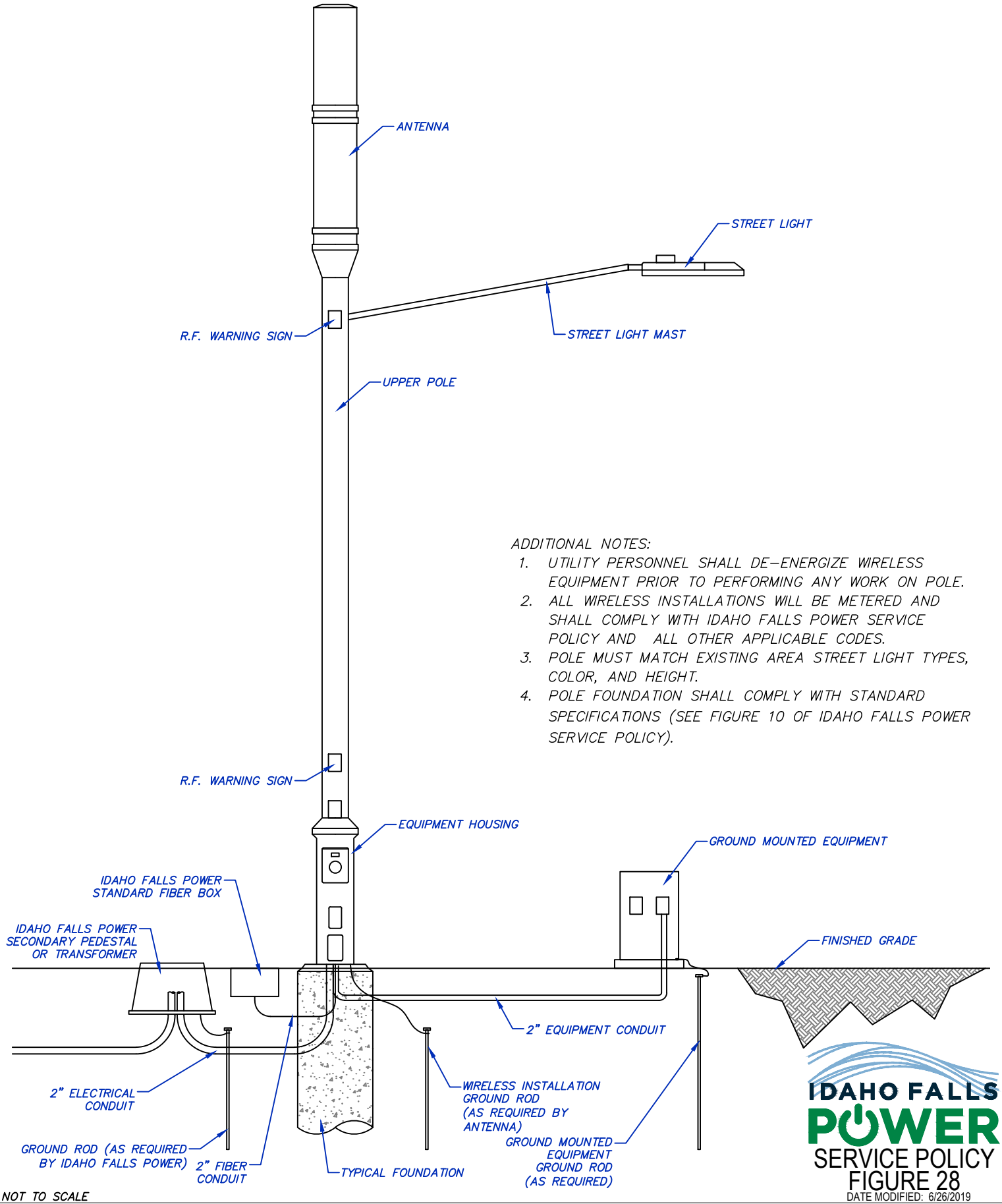

ADDITIONAL NOTES:

1. UTILITY PERSONNEL SHALL DE-ENERGIZE WIRELESS EQUIPMENT PRIOR TO PERFORMING ANY WORK ON POLE.
2. ALL WIRELESS INSTALLATIONS WILL BE METERED AND SHALL COMPLY WITH IDAHO FALLS POWER SERVICE POLICY AND ALL OTHER APPLICABLE CODES.
3. POLE MUST MATCH EXISTING AREA STREET LIGHT TYPES, COLOR, AND HEIGHT.
4. POLE FOUNDATION SHALL COMPLY WITH STANDARD SPECIFICATIONS (SEE FIGURE 10 OF IDAHO FALLS POWER SERVICE POLICY).

IDAHO FALLS POWER

SERVICE POLICY
FIGURE 28
DATE MODIFIED: 6/26/2019

WIRELESS ANTENNA
(STEEL MONO POLE)

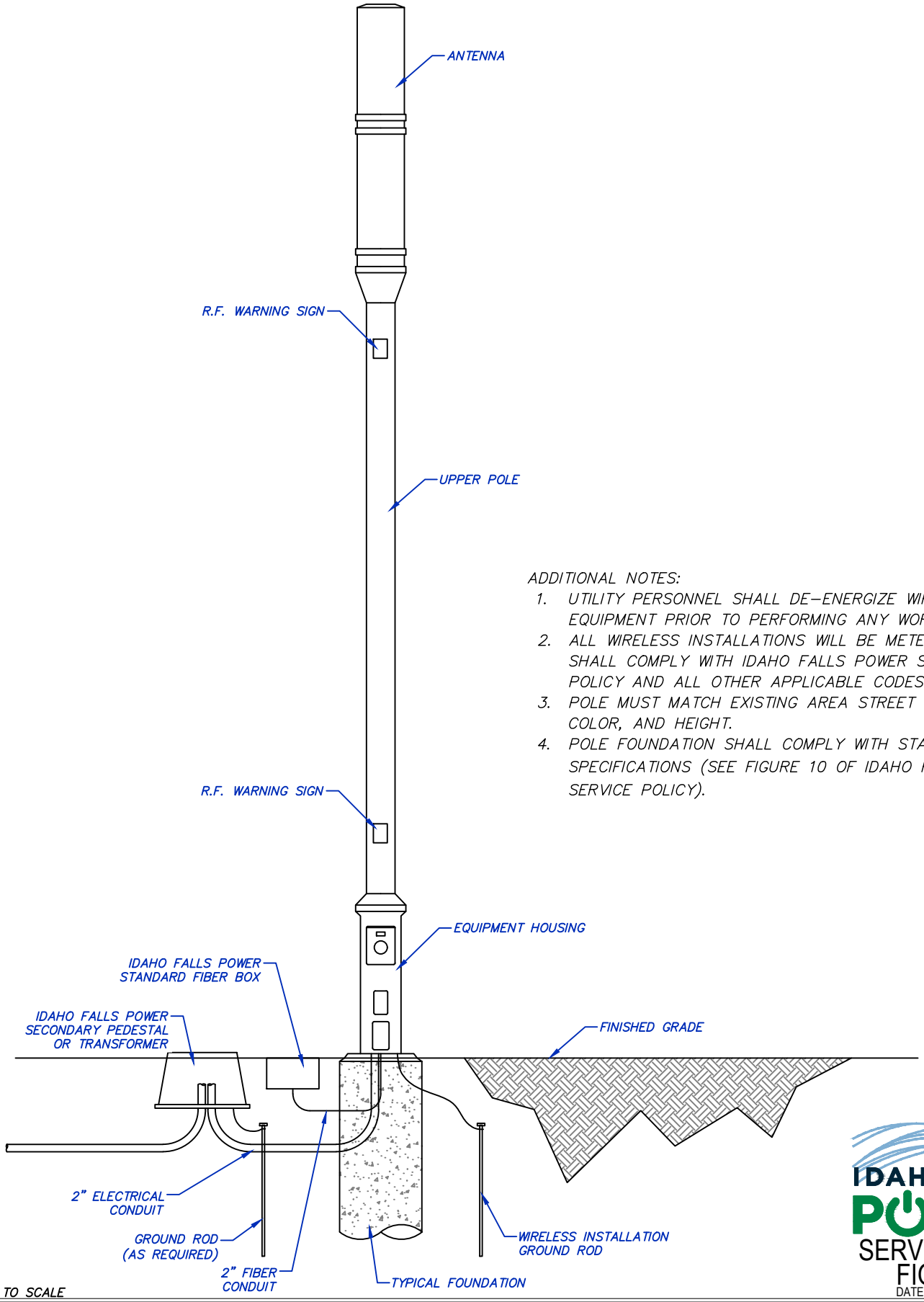

ADDITIONAL NOTES:

1. UTILITY PERSONNEL SHALL DE-ENERGIZE WIRELESS EQUIPMENT PRIOR TO PERFORMING ANY WORK ON POLE.
2. ALL WIRELESS INSTALLATIONS WILL BE METERED AND SHALL COMPLY WITH IDAHO FALLS POWER SERVICE POLICY AND ALL OTHER APPLICABLE CODES.
3. POLE MUST MATCH EXISTING AREA STREET LIGHT TYPES, COLOR, AND HEIGHT.
4. POLE FOUNDATION SHALL COMPLY WITH STANDARD SPECIFICATIONS (SEE FIGURE 10 OF IDAHO FALLS POWER SERVICE POLICY).

NOT TO SCALE

IDAHO FALLS POWER

SERVICE POLICY
FIGURE 29
DATE MODIFIED: 6/26/2019

7' X 12' VAULT

PLAN VIEW

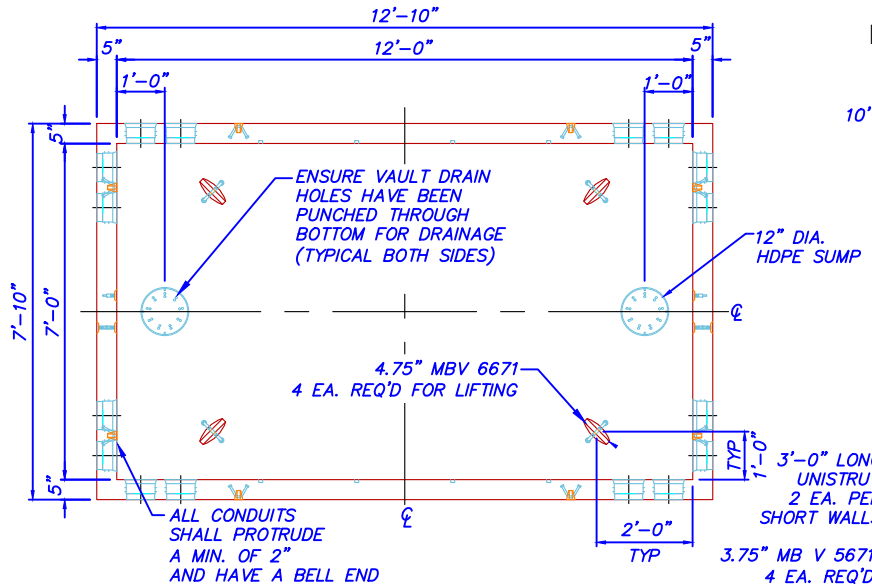

LIFTING DIAGRAM (ISOMETRIC)

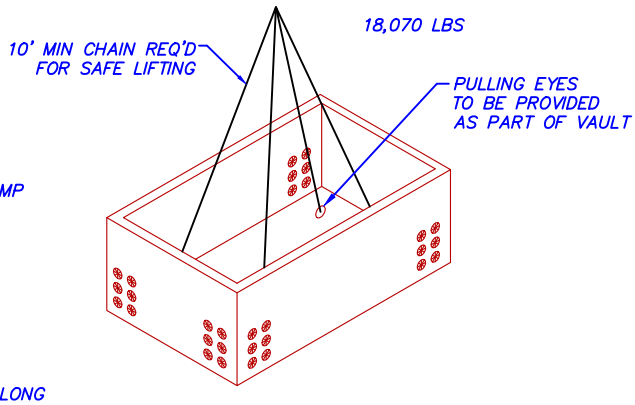

PROFILE VIEW

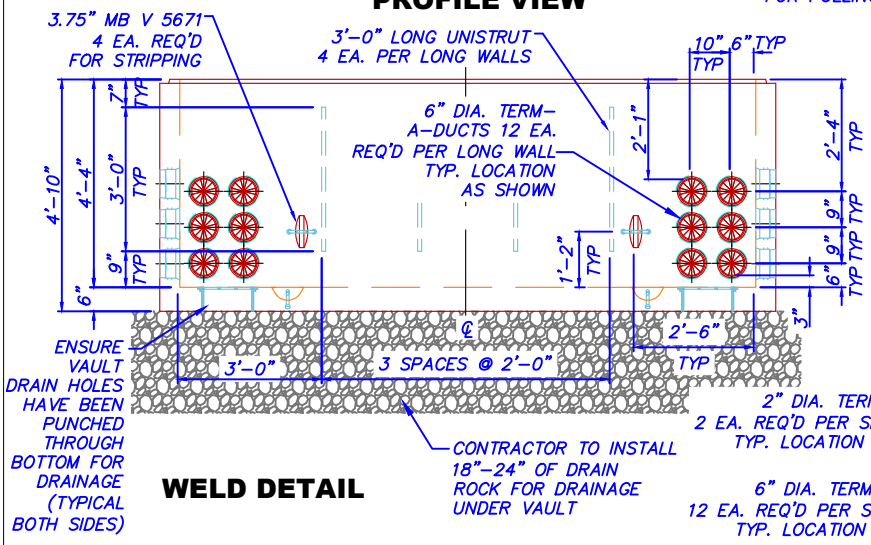

SIDE VIEW

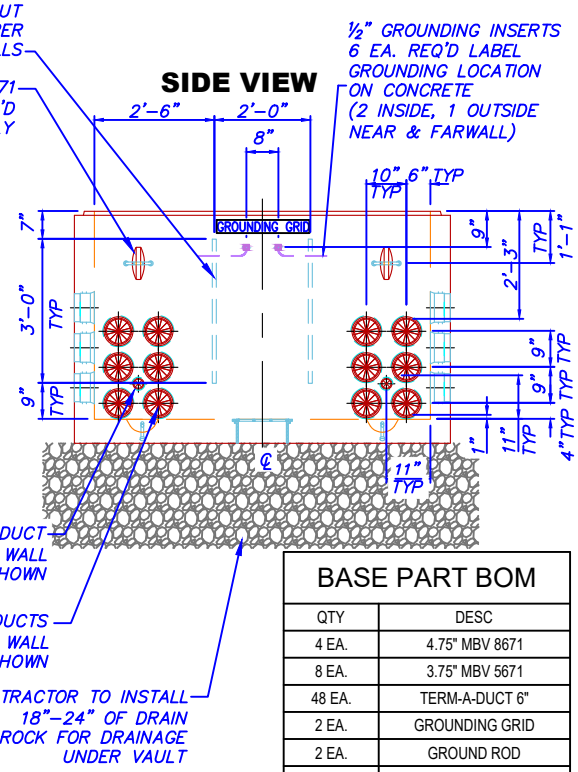

WELD DETAIL

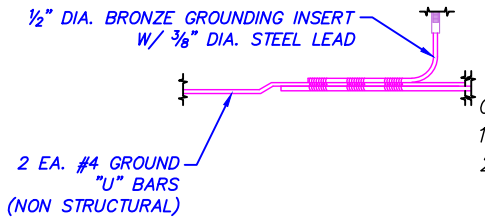

BASE PART BOM	
QTY	DESC
4 EA.	4.75" MBV 8671
8 EA.	3.75" MBV 5671
48 EA.	TERM-A-DUCT 6"
2 EA.	GROUNDING GRID
2 EA.	GROUND ROD
4 EA.	TERM-A-DUCT 2" W/ SEAL
36 FT	UNISTRUT P3200
2 EA.	SUMP W/ LID
4.25 YDS	MIX #1 SCC WETCAST
17,850 LBS	HANDLING WEIGHT

GENERAL NOTES

1. MIN. DESIGN CRITERIA PER ACI-318 CODE & AS NOTED.
2. DESIGN LOADING:
   - 2.1 300 PSF PEDESTRIAN LOAD.
   - 2.2 SOIL WEIGHT = 120 PCF
   - 2.3 DEPTH OF OVERBURDEN: 0'-0" MIN. TO 2'-0" MAX.
   - 2.4 ASSUMED WATER TABLE: 5'-0" BELOW GRADE.
   - 2.5 EQUIV. FLUID PRESSURE = 40 PCF
   - 2.6 LATERAL LIVE LOAD SURCHARGE PER CODE.
3. CONCRETE 28 DAY COMPRESSIVE STRENGTH: 5,000 PSI (MIN)
   STRIPPING STRENGTH: 2,500 PSI (MIN)
4. STEEL REINFORCING:
   BAR: ASTM A-615 GRADE 60
5. CEMENT: TYPE II/V, ASTM C-150 SPECIFICATION
   FLYASH: CLASS F, ASTM C-618 SPECIFICATION
6. CONTRACTOR TO VERIFY PROPER DRAINAGE INSIDE OF VAULT
7. CONTRACTOR TO GROUT OR SEAL AROUND EACH CONDUIT THAT EXTENDS INSIDE OF THE VAULT
8. CONTRACTOR SHALL EXTEND CONDUIT A MIN. OF 2" INSIDE OF VAULT AND CONTRACTOR SHALL INSTALL BELL ENDS

JOINT DETAIL

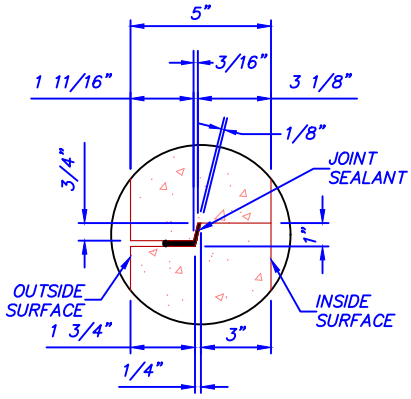

DRAWING COURTESY OF OLDCASTLE INFRASTRUCTURE

NOT TO SCALE

IDAHO FALLS POWER

SERVICE POLICY
FIGURE 30
DATE MODIFIED: 1/19/2021

7' X 12' VAULT LID

PLAN VIEW

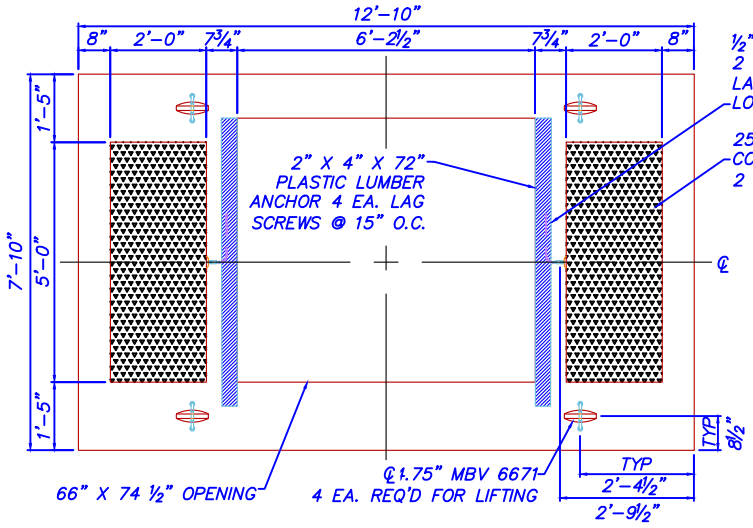

LIFTING DIAGRAM (ISOMETRIC)

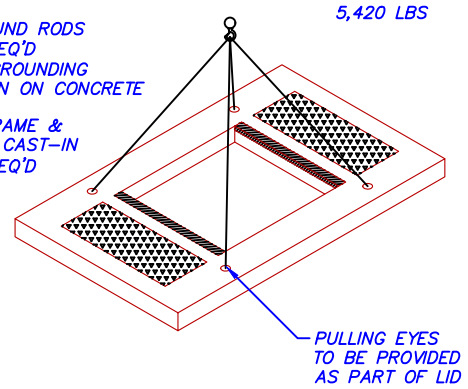

PROFILE VIEW

SIDE VIEW

JOINT DETAIL

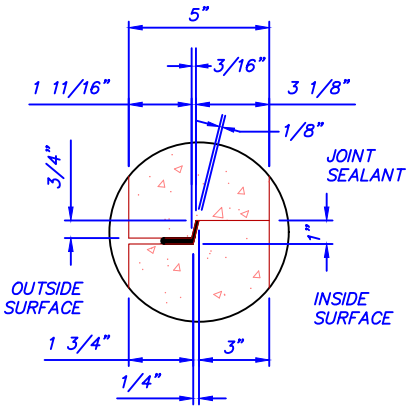

LID PART BOM	
QTY	DESC
4 EA.	4.75" MB V 6671
2 EA.	GROUND RODS
2 EA.	25 TA FRAME
2 EA.	25 TA COVER
11'-0"	PLASTIC LUMBER
1.63 YDS	MIX #1 SCC WETCAST
6,846 LBS	HANDLING WEIGHT
	#5 BAR
	#4 BAR

1. MIN. DESIGN CRITERIA PER ACI-318 CODE & AS NOTED.
2. DESIGN LOADING:
   2.1 300 PSF PEDESTRIAN LOAD.
   2.2 SOIL WEIGHT = 120 PCF
   2.3 DEPTH OF OVERBURDEN: 0'-0"
   2.4 ASSUMED WATER TABLE:
   5'-0" BELOW GRADE.
   2.5 EQUIV. FLUID PRESSURE = 40 PCF
   2.6 LATERAL LIVE LOAD SURCHARGE
   PER CODE.
3. CONCRETE 28 DAY COMPRESSIVE STRENGTH: 5,000 PSI (MIN)
4. STEEL REINFORCING:
   BAR: ASTM A-615 GRADE 60
5. CEMENT: ASTM C-150 SPECIFICATION.
6. USE STD REBAR
7. CONCRETE STRENGTH: 5,000 PSI
8. 2,500 PSI MINIMUM STRIPPING STRENGTH REQUIRED
9. CONTRACTOR TO SEAL LID TO VAULT

DRAWING COURTESY OF
OLDCASTLE INFRASTRUCTURE

IDAHO FALLS POWER

SERVICE POLICY
FIGURE 31
DATE MODIFIED: 1/19/2021

FIBER / POWER SECONDARY TRENCH

PLAN VIEW

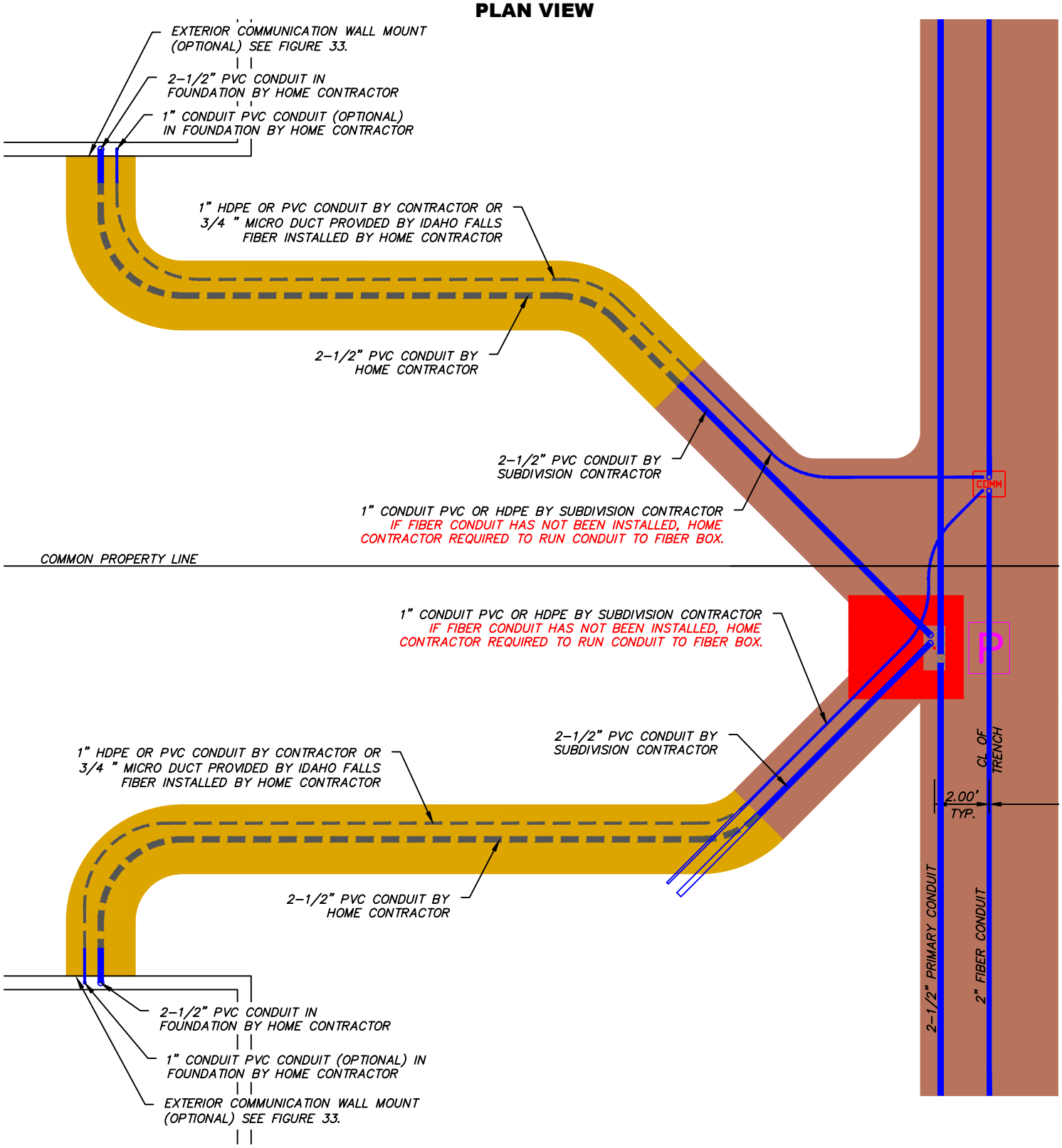

TRENCHING AND CONDUIT BY SITE CONTRACTOR

TRENCHING AND CONDUIT BY HOME CONTRACTOR

DISTANCES MAY VARY - SEE ELECTRICAL SITE PLANS PRIOR TO CONSTRUCTION

IDAHO FALLS POWER

SERVICE POLICY
FIGURE 32
DATE MODIFIED: 01/26/2022

EXAMPLE 1 OF EXTERIOR COMMUNICATION WALL MOUNT

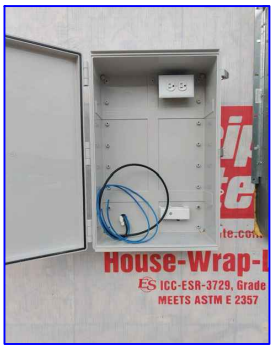

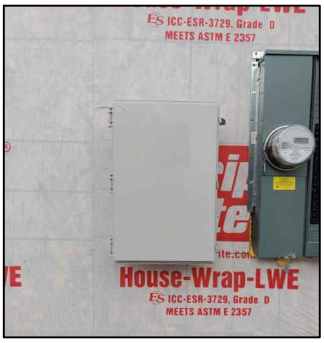

EXAMPLE 2 OF EXTERIOR COMMUNICATION WALL MOUNT

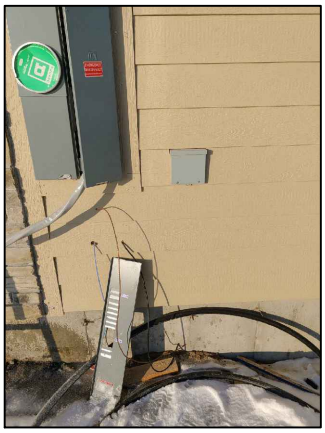

NOTES:

1. **FOR CONSTRUCTIONS SIMILAR OR EQUIVALENT TO EXAMPLE 1: IT IS SUGGESTED THAT THE 110V OUTLET BE PLACED IN A CORNER OF THE INTERIOR OF THE ENCLOSURE.**

2. **FOR CONSTRUCTIONS SIMILAR OR EQUIVALENT TO EXAMPLE 2 OR 3: IT IS SUGGESTED THAT THE ENCLOSURES BE A MINIMUM OF 30 CUBIC INCHES AND THAT BOTH THE MICRODUCT (TUBING FROM THE SECONDARY PEDESTAL) AND INTERDUCT (TUBING TO THE INTERIOR OF THE HOME) ARE CONTAINED IN THE ENCLOSURE.**

EXAMPLE 3 OF EXTERIOR COMMUNICATION WALL MOUNT

IDAHO FALLS POWER

SERVICE POLICY
FIGURE 33
DATE MODIFIED: 01/26/2022

Memorandum

File #: 21-409 **City Council Meeting**

FROM: Bear Prairie, General Manager
DATE: Wednesday, February 16, 2022
DEPARTMENT: Idaho Falls Power

Subject
Quote 837864 Altec Overhead Cable Puller

Council Action Desired
☐ Ordinance ☐ Resolution ☐ Public Hearing
☒ Other Action (Approval, Authorization, Ratification, etc)
Accept and approve the quote received under our GSA contract to purchase a trailer-mounted overhead cable puller (Model TS20-4P) for Idaho Falls Power form Altec Industries, Inc. for a total of $154,103.00 (or take other action deemed appropriate).

Description, Background Information & Purpose
This purchase will aid crews in pulling new overhead wire to poles.

Alignment with City & Department Planning Objectives

☐ ☐ ☒ ☐ ☐ ☒ ☐ ☐

This action supports our readiness for managed, well-planned growth and development, ensuring that community infrastructure meets current and future needs. This action also addressed the safety element of the IFP Strategic Plan.

Interdepartmental Coordination
n/a

Fiscal Impact
This purchase is budgeted for in the 2021/22 IFP budget.

Legal Review
n/a

Altec Industries, Inc.

Reference Solicitation Number:
Opportunity Number: 1630145
Quotation Number: 837864
GSA Contract #: GS-30F-026GA

GSA Piggyback **Date:** 1/20/2022
Quoted for: City of Idaho Falls
Customer Contact:
Phone: **Email:**

Technical Sales Rep: Josh Powell
Phone: 336.786.3441 **/ Email:** josh.powell@altec.com
Altec Local Account Manager: Mike Mattison

REFERENCE ALTEC MODEL

RL9	**Cable Reel Handling And Pulling Special Purpose Vehicle**	**$ 221,584**

Per GSA Specifications in GSA Catalog plus Options below

(A.) GSA OPTIONS ON CONTRACT *(Unit)*

1			
2			

(A1.) GSA OPTIONS ON CONTRACT *(General)*

1			
2			
3			
4			
5			
6			
7			
8			
9			
10			

GSA OPTIONS TOTAL: $221,584
GSA Piggyback Surcharge $1,000

(B.) OPEN MARKET ITEMS

1	**UNIT**	Unit will be a TS20-4P in lieu of an RL9. A TS20-4P is a trailer-mounted overhead cable puller, with four drums that pull conductors individually.	-$68,481
2	**UNIT & HYDRAULIC ACC**		
3	**BODY**		
4	**BODY & CHASSIS ACC**		
5	**ELECTRICAL**		
6	**FINISHING**		
7	**CHASSIS**		
8	**OTHER**		
9	**DELIVERY**		Included

OPEN MARKET ITEMS TOTAL: -$68,481

TOTAL FOR UNIT/BODY/CHASSIS: $154,103

(C.) OPTIONAL ITEMS (items are not included in total above - ADD as required)

1			
2			
3			
4			
5			

****Pricing valid for 45 days****

NOTES

PAINT COLOR: White to match chassis, unless otherwise specified by solicitation.
WARRANTY: Standard Altec Warranty - One (1) year parts warranty One (1) year labor warranty Ninety (90) days warranty for travel charges (Mobile Service) Limited Lifetime Structural Warranty (May vary based on product quoted). Parts only warranty on mounted equipment for overseas customers. Chassis to include standard warranty, per the manufacturer. Chassis OEM to provide warranty support directly to customer. Extended warranty coverages available upon request.
TO ORDER: To order, please contact your Altec Sales Representative at fedgovtsales@altec.com or fax order to 205-278-5800
CHASSIS: Per Altec Commercial Standard
FET TAX: If chassis over 33K lbs. GVWR, 12 % FET is applicable.
DELIVERY: No later than **xxx** days ARO, unless Expedited Delivery options have been discussed with your Altec Account Manager. FOB Customer Location, unless otherwise stated in Quote.
TERMS: Net 30 days
STOCK UNIT OPTIONS: Stock unit options are subject to prior sale. If interested, please notify your Altec Account Manager within 7-business days of this quote to secure.
BEST VALUE: Altec boasts the following "Best Value" features: Altec ISO Grip Controls on Insulated Aerials for Extra Protection, Limited Lifetime Warranty on Structural Components for Aerials and Diggers, Largest Service Network in Industry (Domestic and Overseas), Altec SENTRY® Safety Certification CBT, Dedicated Government Account Manager(s), On-Site Operator Orientation with every Awarded Contract.
TRADE-IN: Equiptment trades must be received in operational condition (as initial inspection) and DOT compliant at the time of pick-up. Failure to comply with these requirements, may result in customer bill-back repairs.
FISCAL YEAR BUDGET ADJUSTMENT: Government pricing is subject to ocassional Economic Pricing Adjustment (EPA) to account model year and material cost changes. If this award occurs after the adjustment have been made, an estimated increase has been provided for your budgetary purposes.

TS20-4P

FOR NEW EQUIPMENT SALES, CALL
800.958.2555
TO SPEAK WITH AN ALTEC REPRESENTATIVE
or visit us online at **altec.com**

Altec®
FOUR DRUM PULLER

TS20-4P

FEATURES

- Operator's Station with Protective Screen and Adjustable Seat
- Pilot Pressure Operator Controls are Centraly Located at Operator Station (Including Payout Brake Controls)
- 8,000 feet of 1/2 inch Diameter Color Coded 12-Strand Synthetic Pulling Rope
- Independent Drum Engagement Couplers with Handle for each Drum for Increased Safety and Functionality
- Individually Actuated Level-Wind Arm for each Pulling Drum
- CAN-Based Engine Display with Tachometer
- Hydraulic Front Jack
- 20 Gallon Fuel Tank with Level Gauge
- 15 Gallon Hydraulic Oil Reservoir with Level and Temperature Gauges
- Closed Loop Hydrostatic Hydraulic Drive System
- DOT 4 Light System (LED)
- 6 Pin Round Wire Connector Trailer Plug
- Adjustable 2.5 inch ID Pintle Eye with Safety Chains and an Emergency Break-Away Switch
- Kubota Tier 4 Final Diesel Engine with 49.6 hp

OPTIONS

- Trailer Plug - 7 Pin Wire Connector
- Pulling Drum Covers

Additional accessories available through Altec Supply including pulling grips, swivels, pilot line systems, and running grounds.

SPECIFICATIONS

Overall Length	15 ft 5 in (4.70 m)
Max Width	8 ft (2.44 m)
Travel Height	8 ft 9 in (2.67 m)
Base Trailer/ Unit Weight (with pulling drum and rope)	10,000 lb (4,536 kg)
Max Torque Rating	36,000 in-lbs (4,068 N-m)
Rated Line Pull (with 6,000 ft. of 5/8" rope)	2,000 lb
Rated Diameter	36 in (91.44 cm)
Max Line Speed	4.5 mph (7.24 km/h)
Engine hp	49.6 hp
Max System Pressure - Hydraulic Pump	3,916 psi (270.00 bar)
Pulling Drum Diameter	36 in
Pulling Drum Width (inside flanges)	23 in
GVWR	10,500 lb (4,703 kg)
GAWR	9,000 lb (4,083 kg)
Hydraulic Tank Capacity	15 gal (56.78 L)
Fuel Tank Capacity	20 gal (75.71 L)

EACH PULLING DRUM CONTAINS 8,000 FT OF SYNTHETIC ROPE FOR MAXIMUM JOB FLEXIBILITY

USER-FRIENDLY DRUM ENGAGEMENT COUPLER ALLOWS FOR SAFE AND PRODUCTIVE DRUM ENGAGEMENT DURING PULLING OPERATIONS

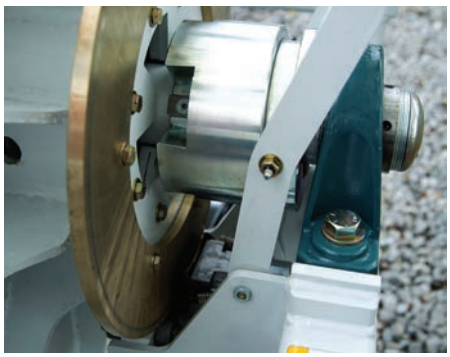

MAJORITY OF UNIT FUNCTIONS LOCATED DIRECTLY AT OPERATORS STATIONS, INCLUDING OVERSPIN BRAKE CONTROLS

For more complete information on Altec products and services, visit us on the web at www.altec.com. Material and specifications are subject to change without notice. Featured units in photos may include optional features. Please contact an Altec representative for all available options. Altec® and the Altec logo are registered trademarks of Altec Inc. in the United States and various other countries and may not be used without permission.
© 2019 Altec Inc. All Rights Reserved. AIOSTS20-4P-919-v1

Memorandum

File #: 21-405 **City Council Meeting**

FROM: Bear Prairie, General Manager
DATE: Tuesday, February 15, 2022
DEPARTMENT: Idaho Falls Power

Subject
Idaho Falls Power Board Meeting Minutes - January 2022

Council Action Desired

☐ Ordinance ☐ Resolution ☐ Public Hearing
☒ Other Action (Approval, Authorization, Ratification, etc)
Approve Idaho Falls Power Board Meeting Minutes from Jan. 27, 2022 (or take other action deemed appropriate).

Description, Background Information & Purpose

The Idaho Open Meeting Law requires that the governing body of a public agency must provide for the taking of written minutes of all its meetings.

Alignment with City & Department Planning Objectives

☐ ☐ ☒ ☐ ☐ ☐ ☐ ☐

This action is in accordance with Idaho Code § 74-205(1) and supports our readiness for good governance by demonstrating sound fiscal management and enabling trust and transparency.

Interdepartmental Coordination

n/a

Fiscal Impact

n/a

Legal Review

n/a

January 27, 2021 Unapproved

The Idaho Falls Power Board of the City of Idaho Falls met Thursday, Jan. 27, 2022, at the Idaho Falls Power Energy Center, 140 S. Capital, Idaho Falls, Idaho at 7:00 a.m.

Call to Order, Roll Call, and Announcements:
There were present:
Mayor Rebecca L. Noah Casper
Board Member Michelle Ziel-Dingman
Board Member Thomas Hally
Board Member Jim Francis
Board Member Jim Freeman (via Zoom)
Board Member John Radford (Via Zoom, joined at 7:17 a.m.)
Board Member Lisa Burtenshaw (Via Zoom, then arrived in person at 8:11 a.m.)

Also present:
Bear Prairie, Idaho Falls Power (IFP) General Manager
Stephen Boorman, IFP Assistant General Manager
Will Hart, Idaho Consumer-Owned Utilities (ICUA) Executive Director (Via Zoom at 8 a.m.)
Richard Malloy, Hydropower & Utility Regulatory Compliance Manager
Randy Fife, City Attorney
Linda Lundquist, IFP Board Secretary

Mayor Casper called the meeting to order at 7:11 a.m.

Calendar Announcements, Events and Updates
Mayor Casper mentioned in speaking with community leaders that she's noticed mutual interest in Idaho Falls peaking plant/clean fuels research park from Idaho National Laboratory (INL), Idaho Environmental Coalition (IEC), Heber and Lehi Cities. She added that INL has hired a net-zero coordinator with plans to bring INL to net-zero by 2031. Board Member Francis said he was surprised by the hard position Mr. Hart took on the four lower snake dam breaching in the recent Idaho Consumer-Owned Utility (ICUA) Legislative Conference. General Manager (GM) Prairie talked about American Public Power Association's (APPA) resolution on hydro support; specific to the four lower dams. He explained that the resolution emphasizes hydro's low cost, no emissions, high output, and extra capacity and pointed out that when the Simpson concept was proposed it projected replacing the energy generation would cost upwards of $16 billion dollars. Board Member Radford said he was a bit dismayed by the climate presentation at the conference, as it seemed a little one-sided. Board Member Freeman reported on his recent NuScale tour in Oregon and said he was impressed with the intelligence and professionalism of the NuScale group and noted that he has gained some reassurances around the Carbon Free Power Project (CFPP). GM Prairie explained the items that will be presented to City Council this night. He announced that the new hydropower billboard on South Yellowstone is to remind the community that hydropower is a cornerstone in Idaho Falls. He continued to explain that the next sign planned will be about fiber in a few months and a third sign for later in the year will tie power to fiber. GM Prairie said he is adding 2 Ford F-150 electric vehicles to IFP's fleet and noted that the four aging Chevrolet Volts currently in the fleet have required very little if any maintenance. Board Member Ziel-Dingman thought the purchase was a great example to set.

Board Policy No. 3 / Board Training Plan
Mayor Casper said the policy does a good job covering the things the board is responsible for and appreciates that GM Prairie brings them forward for an annual review.

It was moved by Board Member Ziel-Dingman and seconded by Board Member Francis to approve the updates to Board Policy No. 3 as presented. The motion passed with unanimous approval.

Board Policy No. 2 / City Council Acting as IFP Board

GM Prairie said he'd received no questions or comments on the policy. He reminded everyone this is the annual review of the policy for the board. Since there were no questions or comments received, no future action is needed.

Legislative Update – Will Hart, ICUA Executive Director via Zoom

Mr. Hart thanked the board for participating in the recent ICUA conference in Boise. He gave a brief history of his role as ICUA's Executive Director and explained ICUA's relationship with not-for-profit, Idaho utilities and how lobbying for clean low-cost power has become well received in the Idaho State Legislature. GM Prairie explained that years before Mr. Hart was hired by ICUA, investor-owned utilities were disregarding and trying to delegitimize municipal power and pointed out that through lobbying and education, investor-owned entities are now partnering with ICUA. Mr. Hart highlighted the larger bills in the state legislature that include the largest state tax-cut Idaho has ever seen. He talked about the session's priorities and bills aimed at protecting linemen and utility workers. He presented on some regional and federal updates and pointed out that the U.S. Congress passed the Infrastructure Investment and Jobs Act which authorizes funds for Federal-aid highways, highway safety programs and transit programs. Mr. Hart reminded the Board of the upcoming APPA Legislative Rally in Washington D.C. and mentioned that it's a good opportunity to meet with Idaho legislators. He reminded the Board about COVID-19 mandates in D.C. but said attempts could be made to meet virtually if needed. Mr. Hart mentioned he is comparing numbers derived from current polling by various entities and encourages folks that support public power to run for office.

Peaking Plant Update

GM Prairie said he is working on the peaking plant white paper as a top priority and mentioned that he continues to have good dialog with community members. He announced that he recommends forming a Resource Advisory Committee for a defined period of time that consists of eight members and should include one of IFP's liaisons. GM Prairie said he is hoping to see the request for proposals from Utah Associated Municipal Power Systems (UAMPS) for Horse Butte Wind expansion and explained that while the CFPP project is still moving forward, by the end of 2022 the city will need to take on more risk as the project will no longer be fully refundable and forewarned those costs will likely be increased in his view with the inflation he is seeing in everything else. Mayor Casper said a committee could be useful to inform the board and remarked if there was a general consensus, then she would move forward with committee formation and said that she and GM Prairie will work with city legal to establish a committee with a possibility of populating it by the end of March. GM Prairie pointed out that time is of the essence. Mr. Fife suggested that IFP could form a subcommittee and later formalize into a Title 2 committee if desired. Mayor Casper reiterated that it would be good for the board to have access to an advisory committee and Mr. Fife said if City Council makes a decision about something, it's better to do it with a formal committee and added that it's fine for a department to form a focus group as long as information is presented to City Council formally. Board Member Francis stated that it made sense to formalize it in an ordinance and Mayor Casper added that for consistency, she would like to utilize city applications where the GM reviews them and makes recommendations to City Council. Board Member Ziel-Dingman said that the board members may like to access the committee from time to time and noted that the utility is in a unique position being surrounded by energy experts. Board Member Hally agreed that having a formal committee lends more credibility. Board Member Freeman asked if six members would be a better number to get up to speed with the utility and GM Prairie said that eight seemed more appropriate to lend the right representation. Board

Member Burtenshaw stated she is in favor of a peaking plant and doesn't want to go through too much extra work with a committee if we end up in the same place. GM Prairie said he is focused on tasking the committee with the priorities of the utility, where resource decisions are likely met with giving up something to get something else. There was a discussion on the process and function of the proposed committee. Board Member Radford said he was in complete agreement with forming a committee and added that he would challenge the committee to look forward to the next 100 years. GM Prairie cautioned that they could get caught up in what is on the horizon but never comes to fruition and prudent utility management requires not being too off in future on theoretical that might never materialize. He shared the resolution that was recently passed by Heber and Lehi Cities. He pointed out this resolution is not binding in any way but simply a measure for each of the utilities' boards to put on a single consistent document that they approve of the utility managers to work together on this project and concept. He reiterated that this is not binding to do anything and that there will be much discussion, deliberation and decision making along with way when more information is gathered from requests for proposals (RFP's) and requests for information (RFI's). Board Member Francis said he would like to see one more recital about collaborating with INL. GM Prairie pointed out the existing recital that speaks to this already, and questioned if this is not accurate or adequate. GM Prairie requested that the board send feedback over the next two weeks. Mayor Casper reiterated that she would like to keep the resolution similar to what Heber and Lehi passed. GM Prairie reminded the board to read through the packet material about emerging hydrogen technologies.

2021 Board Self-Evaluation Results

Board Member Radford stated that he would only be reviewing questions that weren't in 100% agreement. He stated that GM Prairie and Ms. Lundquist have been responding to the *packet reading time* and that they will continue to email items ahead of the packet as they are available. There was a discussion on changing the *board meeting* length, number of meetings per month, time of day, and best day of the week. Mayor Casper reminded the board to look for the airport coming in with some Tuesday morning meetings as a possible conflict. Board Member Radford pointed out that Wednesdays will conflict with Rotary meetings. Board Members Francis and Ziel-Dingman thought that moving the meetings off the same day as city council meetings could make a drastic difference. Mr. Fife said that nothing obligates the board to have the same schedule on a yearly basis as long as it is noticed 48-hours in advance. The board gave GM Prairie a general head nod after discussion to move forward with moving meetings to the second Tuesday, same week as city council meetings, from 8 a.m. to noon. GM Prairie added that he'd be happy to provide lunch if meetings ran until noon if that makes things easier on the board to attend. Board Member Radford talked about the *feedback from rate payers* and Board Member Ziel-Dingman said she only hears from the community if something is wrong and wondered how to communicate that the city council body is also the IFP board. She suggested advertisements that had the council/board on them to remind the community of their role. GM Prairie said the utility has been focused on educating the community about their community-owned power and mentioned the billboards and added that the clean energy survey is wrapping up. Board Member Burtenshaw mentioned that people don't realize that the falls are part of a hydro project. Assistant General Manager (AGM) Boorman introduced the wayfinding signs that the utility has been working on for a couple of years; aimed at helping to educate the community on the city's hydro projects. There was a discussion about the energy survey's feedback. Mayor Casper pointed out there's a difference in being supportive and being willing to pay the price and added that she is hoping the data being received will better inform the decision making. Board Member Radford continued to say the compliance reports and updates on the Federal Energy Regulatory Commission (FERC) are on the agenda this day and may address questions posed in the survey. He continued with the *cybersecurity* question and asked if we should be having annual cyber audits. Mayor Casper added that there is a cybersecurity bill in the house that would protect information. Mr. Fife said the city was instrumental in changing a piece of the Idaho legislation that would allow for redaction of vulnerabilities in reporting. GM Prairie said he would invite Mr. Welch, a

cybersecurity expert with INL to speak to the board. Board Member Burtenshaw pointed out that the IFP Strategic Plan lists peaking capacity as a weakness. AGM Boorman added that the strategic plan is referenced in every IFP council memo. GM Prairie reminded the board that the full packet, Board Survey, and a document listing potential board topics are all in Dropbox. He forewarned the board about a new Rocky Mountain Power buyout customer that is upset about paying their revenue portion of the buyout. GM Prairie compared the land density usage for solar versus gas peaking plants and shared an article with the board.

FERC Compliance & Licensing / NERC Standards

Mr. Malloy explained that the U.S. Congress directed FERC to develop reliability standards for the electric utility industry in 2005 as a result of the 2003 East Coast blackout. FERC delegated responsibility to North American Electric Reliability Corporation (NERC) to draft the standards. NERC delegated enforcement for the standards to six regional entities, of which this utility resides in the Western Electricity Coordinating Council (WECC) region. He pointed out that 27 of the 96 standards are applicable to IFP and explained that the next audit is expected in 2023, which generally occur every nine years for the utility. Mr. Malloy pointed out that the last two audits yielded no violations. He explained cybersecurity requirements and his role in compliance. He reminded the board that Kleinschmidt was hired to help with relicensing. He explained the process to get the bulbs and Gem State relicensed together. Mayor Casper asked if any pushback is anticipated and AGM Boorman pointed out that the last relicensing occurred nearly 50 years ago and no one with IFP has been through the process, which is why Kleinschmidt was hired and added that FERC will run the meetings. Mr. Malloy said that Joe Lucas has also been hired as an independent consultant who has been through the process to manage stakeholder interests and outreach. AGM Boorman pointed out that part of the presentation is to realize the amount of regulatory compliance the utility is under. Board Member Burtenshaw asked if there have been issues in the past with the tribes and Mr. Malloy said IFP's smaller hydro projects have not been of too much interest to them in the time he has been at IFP. AGM Boorman pointed out that although arduous, 40-year licensing can be a good thing.

There being no further business, the meeting adjourned at 11:00 a.m.

s/ Linda Lundquist

Linda Lundquist, BOARD SECRETARY

s/ Rebecca L. Noah Casper

Rebecca L. Noah Casper, MAYOR

Memorandum

File #: 21-412 **City Council Meeting**

FROM: Chris H Fredericksen, Public Works Director
DATE: Wednesday, February 16, 2022
DEPARTMENT: Public Works

Subject
Bid Award - Hemmert Avenue Railroad Crossing

Council Action Desired
☐ Ordinance ☐ Resolution ☐ Public Hearing
☒ Other Action (Approval, Authorization, Ratification, etc.)

Approve the plans and specifications, award to the lowest responsive, responsible bidder, HK Contractors, Inc., in an amount of $528,634.90 and give authorization for the Mayor and City Clerk to execute the necessary documents or take other action deemed appropriate.

Description, Background Information & Purpose
On Tuesday, February 15, 2022, bids were received and opened for the Hemmert Avenue Railroad Crossing project. A tabulation of bid results is attached. The purpose of the proposed bid award is to construct roadway and sidewalk improvements on Hemmert Avenue near the existing railroad crossing. The work is required to coordinate installation of new railroad planking, signals and gates that will be completed as a separate Federal Aid project.

Alignment with City & Department Planning Objectives

☐ ☐ ☐ ☐ ☒ ☐ ☐ ☒

This project supports the community-oriented result of livable community and reliable public infrastructure and transportation by completing roadway and sidewalk improvements along Hemmert Avenue.

Interdepartmental Coordination
Project reviews have been conducted with all necessary city departments to ensure coordination of project activities.

Fiscal Impact
Cost allocations for this project will come from Street Fund and Municipal Capital Improvement Fund. Sufficient funding

and budget authority exist for completion of the proposed improvements.

Legal Review

The Legal Department has reviewed the bid process and concurs that the Council action desired is within Idaho State Statute.

2-38-8-2-TRF-2020-04
2022-13

HEMMERT AVE
RAILROAD CROSSING
PROJECT # 2-38-08-2-TRF-2020-04

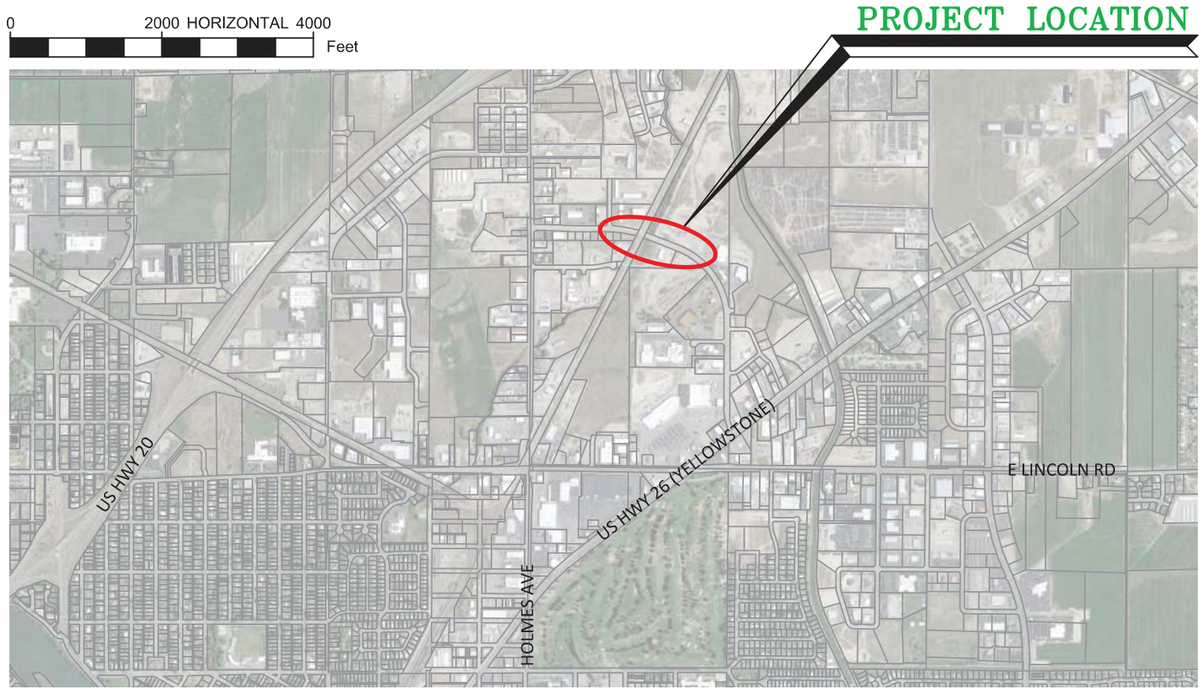

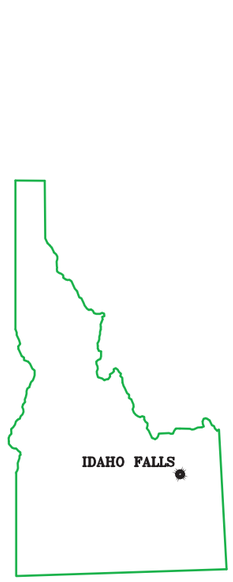

Digitally signed by Kent J Fugal:A01410C000 00177F92E041C00 017649
Date: 2022.01.28 16:49:17-07'00'

PROFESSIONAL ENGINEER
REGISTERED
9247
STATE OF IDAHO
KENT J. FUGAL

MAYOR

REBECCA L. NOAH CASPER

CITY COUNCIL

MICHELLE ZIEL-DINGMAN
LISA BURTENSHAW
THOMAS HALLY
JIM FRANCIS
JOHN B. RADFORD
JIM FREEMAN

ENGINEERING DIVISION

PUBLIC WORKS DIRECTOR
CHRIS H FREDERICKSEN, P.E.

CITY ENGINEER
KENT J. FUGAL, P.E., PTOE

2022

AS BUILT:	IDAHO FALLS PUBLIC WORKS
SCALE SHOWN IS FOR SHEET 11 x 17 ONLY	
ENGINEERING DIVISION	
HEMMERT AVE RAILROAD CROSSING	
CHK BY: CEP / DSG BY: WEM	DWN BY: WEM
FILE NO. 2-38-8-2-TRF-2020-04 / DWG NO. MAIN-HEMMERT RR XING.dwg	DATE PLOTTED: 1/28/2022 / SHEET NO. 1 OF 8

City of Idaho Falls

Engineering Department

Bid Tabulation

Project: HEMMERT AVE RAILROAD CROSSING ***Number:*** 2-38-8-2-TRF-2020-04

Submitted: Kent J. Fugal, P.E., PTOE ***Date:*** February 15, 2022

Item Number	Reference Number	Description	Estimated Quantity	Unit	Engineer's Estimate		HK Contractors, Inc.		Knife River Corporation - Mountain West		Sunroc Corporation Dba Depatco		JM Concrete, Inc.	
					Unit Price	Total Amount	Unit Price	Total Amount	Unit Price	Total Amount	Unit Price	Total Amount	Unit Price	Total Amount
		DIVISION 200 - EARTHWORK												
2.01	201.4.1.D.1	Removal of Pavement	2,987	SY	$10.00	$29,870.00	$5.40	$16,129.80	$3.00	$8,961.00	$4.25	$12,694.75	$10.00	$29,870.00
2.02	202.4.1.A.1	Excavation	2,718	CY	$12.50	$33,975.00	$7.90	$21,472.20	$11.50	$31,257.00	$9.25	$25,141.50	$50.00	$135,900.00
2.03	202.4.6.A.1	Borrow	1,291	CY	$20.00	$25,820.00	$4.40	$5,680.40	$27.00	$34,857.00	$7.95	$10,263.45	$30.00	$38,730.00
2.04	206.4.1.I.3.	Hand Placed Riprap	14	CY	$200.00	$2,800.00	$57.00	$798.00	$155.00	$2,170.00	$165.00	$2,310.00	$100.00	$1,400.00
		DIVISION 600 - CULVERTS & STORM DRAINS												
6.01	601.4.1.A.5.a	12" Storm Drain Pipe, PVC	135	LF	$40.00	$5,400.00	$45.50	$6,142.50	$63.00	$8,505.00	$69.00	$9,315.00	$50.00	$6,750.00
6.02	601.4.1.A.5.b	48" Storm Drain Pipe, PVC	91	LF	$110.00	$10,010.00	$400.00	$36,400.00	$320.00	$29,120.00	$398.00	$36,218.00	$300.00	$27,300.00
6.03	602.4.1.F.1	Catch Basin – Type IV	2	EA	$4,000.00	$8,000.00	$3,050.00	$6,100.00	$2,975.00	$5,950.00	$3,593.00	$7,186.00	$3,000.00	$6,000.00
		DIVISION 700 - CONCRETE												
7.01	706.4.1.A.7.a	Curb and Gutter, Type Standard	1,820	LF	$45.00	$81,900.00	$23.25	$42,315.00	$28.00	$50,960.00	$25.50	$46,410.00	$35.00	$63,700.00
7.02	706.4.1.E.1.a	Concrete Sidewalks, thickness 4"	982	SY	$80.00	$78,560.00	$57.25	$56,219.50	$65.00	$63,830.00	$86.20	$84,648.40	$75.00	$73,650.00
7.03	706.4.1.E.1.b	Concrete Sidewalks, thickness 7"	109	SY	$110.00	$11,990.00	$110.00	$11,990.00	$102.00	$11,118.00	$92.45	$10,077.05	$95.00	$10,355.00
		DIVISION 800 - AGGREGATES & ASPHALT												
8.01	801.4.1.A.1	12" Minus Uncrushed Aggregate Subbase	1,604	CY	$35.00	$56,140.00	$25.50	$40,902.00	$25.00	$40,100.00	$23.45	$37,613.80	$30.00	$48,120.00
8.02	802.4.1.A.1	8" Crushed Aggregate for Base Type 1	1,069	CY	$45.00	$48,105.00	$35.00	$37,415.00	$35.00	$37,415.00	$36.30	$38,804.70	$40.00	$42,760.00
8.03	810.4.1.A.1	3" Plant Mix Pavement1/2", PG 58-34	801	TO	$95.00	$76,095.00	$95.00	$76,095.00	$90.00	$72,090.00	$106.00	$84,906.00	$96.50	$77,296.50
		DIVISION 1000 - CONSTRUCTION STORMWATER BMP's												
10.01	1001.4.1.A.1	Sediment Control	1	LS	$8,000.00	$8,000.00	$10,800.00	$10,800.00	$4,000.00	$4,000.00	$16,260.00	$16,260.00	$2,000.00	$2,000.00
		DIVISION 2000 - MISCELLANEOUS												
20.01	2010.4.1.A.1	Mobilization	1	LS	$75,000.00	$75,000.00	$36,500.00	$36,500.00	$83,000.00	$83,000.00	$90,000.00	$90,000.00	$50,000.00	$50,000.00
20.02	2030.4.1.A.1	Manhole, Type I, Adjust to Grade	1	EA	$1,000.00	$1,000.00	$328.00	$328.00	$1,050.00	$1,050.00	$980.00	$980.00	$2,500.00	$2,500.00
20.03	2030.4.1.C.1	Valve Box, Adjust to Grade	1	EA	$800.00	$800.00	$328.00	$328.00	$925.00	$925.00	$463.00	$463.00	$2,000.00	$2,000.00
20.04	2040.4.1.D.1	Remove and Reset Fence	123	LF	$100.00	$12,300.00	$7.50	$922.50	$41.00	$5,043.00	$205.00	$25,215.00	$20.00	$2,460.00
20.05	2050.4.1.C.1	Subgrade Preparation Geotextile	4,812	SY	$3.25	$15,639.00	$2.50	$12,030.00	$2.00	$9,624.00	$2.05	$9,864.60	$4.00	$19,248.00
		SPECIAL PROVISIONS												
SP-1	S0611	Pipe End Treatment, 12" Pipe	1	EA	$2,000.00	$2,000.00	$500.00	$500.00	$8,075.00	$8,075.00	$995.00	$995.00	$5,000.00	$5,000.00
SP-2	S0701	Headwall	1	LS	$15,000.00	$15,000.00	$11,500.00	$11,500.00	$77,160.00	$77,160.00	$64,100.00	$64,100.00	$35,000.00	$35,000.00
SP-3	S0705	Sidewalk Drain	1	EA	$3,000.00	$3,000.00	$5,300.00	$5,300.00	$12,200.00	$12,200.00	$15,300.00	$15,300.00	$5,000.00	$5,000.00
SP-4	S1150	Remove & Replace Sign	3	EA	$1,000.00	$3,000.00	$1,475.00	$4,425.00	$1,150.00	$3,450.00	$1,780.00	$5,340.00	$500.00	$1,500.00
		TOTAL BASE BID				**$604,404.00**		**$440,292.90**		$600,860.00		$634,106.25		$686,539.50
		ADDITIVE ALTERNATE BID SCHEDULE NO.1												
		DIVISION 600 - CULVERTS & STORM DRAINS												
2.05	201.4.1.E.1.ALT	Removal of Storm Drain	81	LF	$40.00	$3,240.00	$22.00	$1,782.00	$9.00	$729.00	$35.05	$2,839.05	$60.00	$4,860.00
		DIVISION 600 - CULVERTS & STORM DRAINS												
6.04	601.4.1.A.5.ALT	48" Storm Drain Pipe, PVC	386	LF	$110.00	$42,460.00	$210.00	$81,060.00	$255.00	$98,430.00	$290.00	$111,940.00	$325.00	$125,450.00
6.05	602.4.1.A.1.ALT	Storm Drain Manhole – Type B	1	EA	$3,000.00	$3,000.00	$5,500.00	$5,500.00	$5,775.00	$5,775.00	$5,940.00	$5,940.00	$5,000.00	$5,000.00
		TOTAL ALT-1				**$48,700.00**		**$88,342.00**		**$104,934.00**		**$120,719.05**		**$135,310.00**
		GRAND TOTAL				**$653,104.00**		**$528,634.90**		$705,794.00		$754,825.30		$821,849.50

Memorandum

File #: 21-414 **City Council Meeting**

FROM: Chris H Fredericksen, Public Works Director
DATE: Wednesday, February 16, 2022
DEPARTMENT: Public Works

Subject
Bid Award - North Highland Park Concrete Improvements

Council Action Desired
☐ Ordinance ☐ Resolution ☐ Public Hearing
☒ Other Action (Approval, Authorization, Ratification, etc)

Approve the plans and specifications, award to the lowest responsive, responsible bidder, RC Heavy Haul, Inc. in an amount of $138,829.74 and give authorization for the Mayor and City Clerk to execute the necessary documents (or take other action deemed appropriate).

Description, Background Information & Purpose
On Tuesday, February 15, 2022, bids were received and opened for the North Highland Park Concrete Improvements project. A tabulation of bid results is attached. The purpose of the proposed bid award is to construct sidewalk and storm drainage improvements along Canyon Avenue in Highland Park.

Alignment with City & Department Planning Objectives

☐ ☐ ☐ ☐ ☒ ☐ ☐ ☐

This project supports the community-oriented result of livable community. Project improvements will improve walkability by installing sidewalk where none currently exists along Canyon Avenue.

Interdepartmental Coordination
Project reviews have been conducted with all necessary city departments to ensure coordination of project activities.

Fiscal Impact
The cost allocation for this project will come from Community Development Block Grant funds. Sufficient funding and budget authority exist for completion of the proposed improvements.

Legal Review

The Legal Department has reviewed the bid process and concurs that the Council action desired is within Idaho State Statute.

2-38-7-3-STR-2021-16
2022-12

N. HIGHLAND PARK CONCRETE IMPROVEMENTS – 2022

PROJECT # 2-37-12-4-STR-2021-16

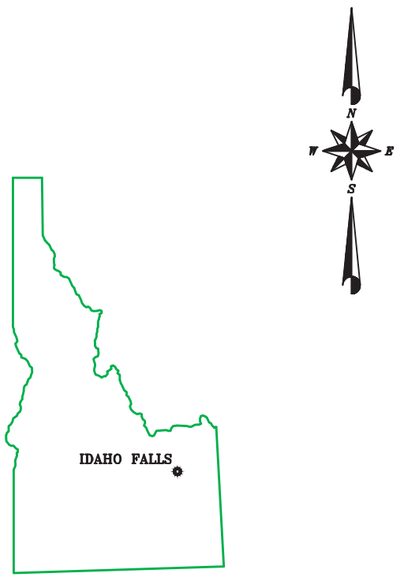

PROJECT LOCATION

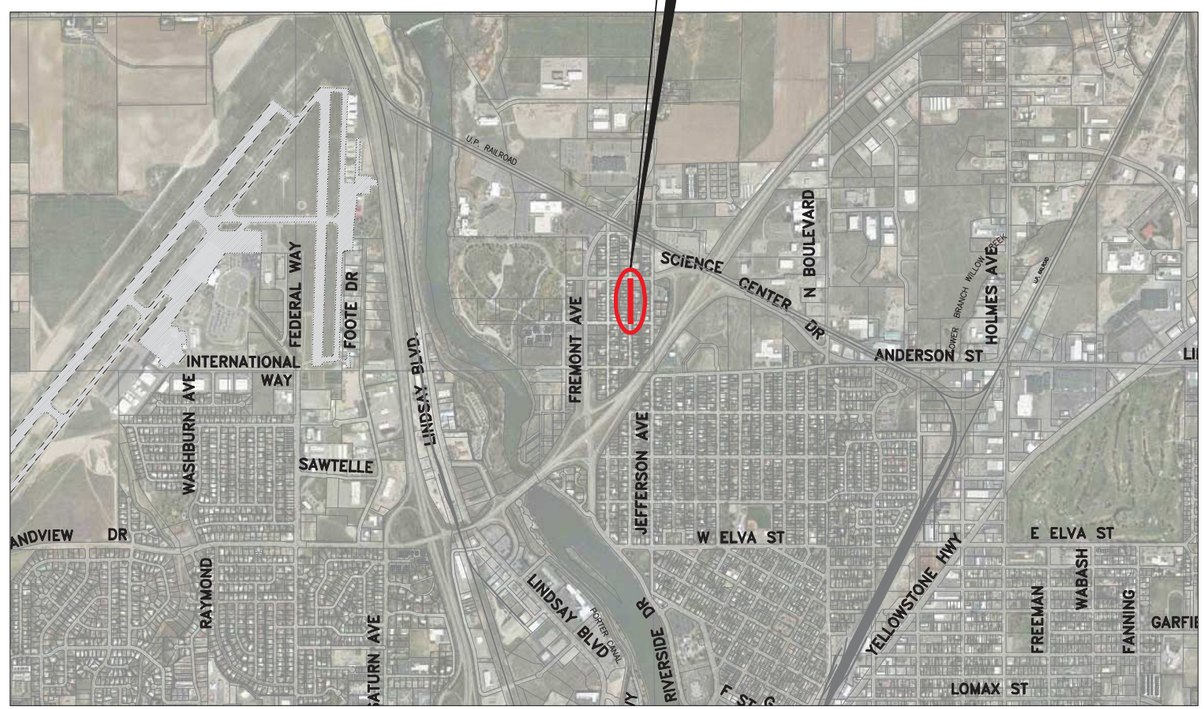

Digitally signed by Kent J Fugal:A01410C00000177F92E041C00017649
Date: 2022.01.28 14:07:55-07'00'

PROFESSIONAL ENGINEER
REGISTERED
9247
STATE OF IDAHO
KENT J. FUGAL

MAYOR

REBECCA L. NOAH CASPER

CITY COUNCIL

MICHELLE ZIEL-DINGMAN
LISA BURTENSHAW
THOMAS HALLY
JIM FRANCIS
JOHN B. RADFORD
JIM FREEMAN

ENGINEERING DIVISION

PUBLIC WORKS DIRECTOR
CHRIS H FREDERICKSEN, P.E.

CITY ENGINEER
KENT J. FUGAL, P.E., PTOE

2022

AS BUILT:

SCALE SHOWN IS FOR SHEET 11 x 17 ONLY

ENGINEERING DIVISION

IDAHO FALLS PUBLIC WORKS

N. HIGHLAND PARK CONCRETE IMPROVEMENTS – 2022
TITLEPAGE

CHK BY: CEP	DSG BY: RS	DWN BY: RS	
FILE NO. 2-37-12-4-STR-2021-16	DATE PLOTTED: 01/28/22	SHEET NO. 1 OF 3	
DWG NO. STR-2021-16 Titlepage-2022			

City of Idaho Falls

Engineering Department

Bid Tabulation

Project: N HIGHLAND PARK CONCRETE IMPROVEMENTS - 2022 ***Number:*** 2-37-12-4-STR-21-16

Submitted: Kent J. Fugal, P.E., PTOE ***Date:*** February 15, 2022

Item Number	Reference Number	Description	Estimated Quantity	Unit	Engineer's Estimate		RC Heavy Haul, Inc.		3H Construction, Inc.		JM Concrete, Inc.	
					Unit Price	Total Amount	Unit Price	Total Amount	Unit Price	Total Amount	Unit Price	Total Amount
		DIVISION 200 - EARTHWORK										
2.01	201.4.1.B.1	Clearing and Grubbing	1	LS	$5,000.00	$5,000.00	$10,161.58	$10,161.58	$8,000.00	$8,000.00	$10,000.00	$10,000.00
2.02	202.4.1.A.1	Excavation	200	CY	$50.00	$10,000.00	$53.54	$10,708.00	$40.00	$8,000.00	$100.00	$20,000.00
2.03	201.4.1.F.1.a	Removal of Tree, Approx. 6"	3	EA	$1,000.00	$3,000.00	$458.42	$1,375.26	$1,500.00	$4,500.00	$1,000.00	$3,000.00
2.04	201.4.1.F.1.b	Removal of Tree, Approx. 18"	3	EA	$3,000.00	$9,000.00	$2,241.18	$6,723.54	$4,500.00	$13,500.00	$2,000.00	$6,000.00
		DIVISION 700 - CONCRETE										
7.01	706.4.1.E.1	Concrete Sidewalks	678	SY	$90.00	$61,020.00	$90.52	$61,372.56	$130.00	$88,140.00	$150.00	$101,700.00
		DIVISION 800 - AGGREGATES & ASPHALT										
8.01	802.4.1.A.1	6" Crushed Aggregate for Base, Type I	70	CY	$70.00	$4,900.00	$134.19	$9,393.30	$90.00	$6,300.00	$50.00	$3,500.00
8.02	810.4.1.A.1	2.5" Plant Mix Pavement 1/2", PG 58-34	58	TO	$150.00	$8,700.00	$259.77	$15,066.66	$305.00	$17,690.00	$317.00	$18,386.00
		DIVISION 2000 - MISCELLANEOUS										
20.01	2010.4.1.A.1	Mobilization	1	LS	$15,000.00	$15,000.00	$6,833.78	$6,833.78	$20,000.00	$20,000.00	$46,000.00	$46,000.00
20.02	2030.4.1.A.1	Manhole, Type 1, Adjust to Grade	1	EA	$1,000.00	$1,000.00	$1,820.30	$1,820.30	$850.00	$850.00	$2,000.00	$2,000.00
		SPECIAL PROVISIONS										
SP-1	S0255	Drain Rock, 3" Minus, 4" Thickness	44	CY	$125.00	$5,500.00	$187.21	$8,237.24	$125.00	$5,500.00	$200.00	$8,800.00
SP-2	S0416A	Adjust Meter Pit, 1"	19	EA	$500.00	$9,500.00	$276.46	$5,252.74	$500.00	$9,500.00	$1,000.00	$19,000.00
SP-3	S2040	Remove & Reinstall Fence	74	LF	$125.00	$9,250.00	$25.47	$1,884.78	$125.00	$9,250.00	$100.00	$7,400.00
		TOTAL				**$141,870.00**		**$138,829.74**		$191,230.00		$245,786.00

Memorandum

File #: 21-424 **City Council Meeting**

FROM: Kathy Hampton, City Clerk
DATE: Thursday, February 17, 2022
DEPARTMENT: Municipal Services

Subject
Minutes from Council Meetings

Council Action Desired
☐ Ordinance ☐ Resolution ☐ Public Hearing
☒ Other Action (Approval, Authorization, Ratification, etc.)

Approve the minutes as described below (or take other action deemed appropriate).

Description, Background Information & Purpose
February 7, 2022 City Council Work Session and February 10, 2022 City Council Meeting

Alignment with City & Department Planning Objectives

☐ ☒ ☐ ☐ ☐ ☐ ☐ ☐

The minutes support the Good Governance community-oriented result by providing assurance of regulatory and policy compliance to minimize and mitigate risk.

Interdepartmental Coordination
N/A

Fiscal Impact
N/A

Legal Review
N/A

February 7, 2022 Council Work Session - Unapproved

The City Council of the City of Idaho Falls met in Council Work Session, Monday, February 7, 2022, in the Council Chambers in the City Annex Building located at 680 Park Avenue in Idaho Falls at 3:00 p.m.

Call to Order and Roll Call
There were present:
Mayor Rebecca L. Noah Casper
Council President Michelle Ziel-Dingman
Councilor Thomas Hally
Councilor Jim Freeman
Councilor Jim Francis
Councilor Lisa Burtenshaw
Councilor John Radford (arrived at 3:12 p.m.)

Also present:
Pamela Alexander, Municipal Services Director
Josh Roos, Treasurer
Chris Fredericksen, Public Works Director
Kent Fugal, City Engineer
Colin McAweeney, TischlerBise
Brad Cramer, Community Development Services Director
PJ Holm, Parks and Recreation Director
Duane Nelson, Fire Chief
Paul Radford, Fire Captain
Bryce Johnson, Police Chief
Joel Tisdale, Police Captain
Chris Canfield, Assistant Public Works Director
Bud Cranor, Mayor's Office Chief of Staff
Michael Kirkham, Assistant City Attorney
Randy Fife, City Attorney
Kathy Hampton, City Clerk

Mayor Casper called the meeting to order at 3:06 p.m. with the following items:

Acceptance and/or receipt of minutes:
It was moved by Councilor Francis, seconded by Councilor Freeman, that council receive the recommendations from the February 1, 2022 Planning and Zoning (P&Z) Commission meeting pursuant to the Local Land Use Planning Act (LLUPA). The motion carried with the following vote: Aye – Councilors Francis, Dingman, Freeman, Hally, Burtenshaw. Nay – none.

Calendars, Announcements, Reports, and Updates:
February 11, Idaho Falls Police Department (IFPD) Annual Awards
February 21, Presidents Day, city offices closed
February 22, City Council Work Session
February 24, Idaho Falls Power (IFP) Board Meeting; and City Council Meeting
End of the month, American Public Power Association (APPA) Legislative Rally

Mayor Casper stated several (Community Development Services) items scheduled for the February 10 City Council Meeting have been moved to the February 24 City Council Meeting due to an advertisement error with the Post Register. She believes this may be a lengthy meeting. She also stated the next city/county meeting date is still being determined; she reminded the council that the Idaho National Laboratory (INL) would like to move forward with Connecting Us--Sustaining Progress (CUSP) suggestions (she indicated a meeting will be held February 23 regarding CUSP); and she will forward a summary of legislative bills supported by the Association of Idaho Cites (AIC) to the council. Mayor Casper distributed an amended IFP Board Meeting Schedule Analysis per previous discussion at an IFP Board Meeting. Brief discussion followed regarding preferred schedules.

Liaison Reports and Councilmember Concerns:

Councilor Hally briefly reviewed Senate Bill (SB) 1241 regarding the Circuit Breaker Program. He noted AIC strongly supported this bill. He believes this is a good population to target. He also briefly reviewed a bill that would take a certain percentage from the liquor fund to Peace Officers Standards and Training (POST). He noted AIC supports this bill as well.

Councilor Burtenshaw stated the canal trails are finished across Cranmer. She also stated there is no ground-breaking ceremony currently scheduled for the Law Enforcement Complex (LEC). She noted the IFPD are willing to have another day of wood salvaging at the LEC location.

Council President Dingman stated she, along with Councilor Freeman, are scheduled to attend the upcoming American Association of Airport Executives (AAAE) Conference. She also stated, per the Greater Idaho Falls Transit (GIFT), an advertisement for a Transit Coordinator position was resubmitted, interviews are currently happening, and the Request for Proposal (RFP) for the Third-Party Transit Service ends February 10. She stated she will provide future GIFT updates.

Councilor Francis stated three (3) agencies have hired a consultant to perform analysis of calls for a funding formula for the E911 agreement. He also stated Chief Johnson prefers the Rule of 80 for dispatchers due to the stress of the job and the difficultly of retaining personnel. He noted objections were raised by AIC. Mayor Casper explained AIC's objections are due to the financial mechanisms. Brief comments followed.

Councilor Freeman stated IFP is currently accepting applications for the annual Idaho Consumer-Owned Utilities Association (ICUA) Youth Rally scholarship program.

Councilor Radford stated, per Parks and Recreation (P&R), the youth team participation are at full levels; the Aquatic Center heating, ventilation, and air conditioning (HVAC) is progressing; outdoor skating has been successful; and the zoo opening is anticipated for April. He also stated, per IFP, work is beginning on the resource advisory meeting; fiber is progressing; and he reiterated the Youth Rally.

Municipal Services/Discussion: American Rescue Plan Act (ARPA) Process:

Director Alexander reviewed the following with general discussion throughout:

- Total ARPA Funds - $10.5M for City of Idaho Falls
- Funds are received through two (2) distributions (first distribution has been received, second distribution scheduled to be received May 2022)
- Funds must be expended no later than December 31, 2026

ARPA Committees

- Public Health Expenditures
- Lost Public Sector Revenue
- Water, Sewer and Broadband Infrastructure

Director Alexander stated shortly after the committees were created and had been meeting there was an expansion of guidelines in January 2022.

Mr. Roos stated the Final Rule takes effect on April 1, 2022. He believes the biggest change is the lost revenue. He indicated cities can continue the calculations or spend up to $10M without any calculations, which is an average of lost revenue for cities. He does not believe it makes sense to continue calculations as the city is receiving $10.5M. Mr. Roos briefly explained other changes, including public health and economic impacts, and water, sewer, and broadband infrastructure. He believes approximately 85% of the changes are related to public health and economic impacts. Mayor Casper stated committees were formed for three (3) of the four (4) funding categories with follow-up presentations and recommendations to be presented to the council, however, due to variety of circumstances those presentations/recommendations did not occur with the council. She believes due to the continuing pandemic impact she does not recommend spending this money all at once. She proposed collapsing the three (3) committees into one (1) committee to identify a master list, criteria, and a timeline. Council President Dingman, Councilor Freeman, and Councilor Hally agreed with Mayor Casper's proposal. Councilor Burtenshaw believes a previous commitment for some of the money should remain. Discussion followed regarding this restricted cash in the General Fund. Per Councilor Freeman, Mr. Roos stated this money cannot be used for income. Following additional comments, Mayor Casper stated the committee will be reorganized.

Public Works, and other departments/Discussion: Impact Fees:

Director Fredericksen stated a consultant was hired for collaboration with several city departments, including Community Development Services, Legal, Fire/Emergency Medical Services (EMS), Municipal Services, Parks and Recreation, Police, and Public Works. He also stated the city does not currently have impact fees, although, these fees are allowed through Idaho Code Title 67, Chapter 82. He provided a background of impact fees and working documents to this point, stating presentations occurred at the November 8, 2021 and November 22, 2021 City Council Work Sessions. He stated two (2) changes occurred on December 15, 2021 by staff which included changes to the transportation program (25% arterial federal aid and $1.5M in existing Capital Improvement Funds (CIF) which resulted in a reduction of $1,819 per residential) and P&R fees (land cost increased from $20K to $30K/acre which resulted in an increase of $178 per residential).

Director Fredericksen then reviewed the following with general discussion throughout:

Maximum Supportable Fees –

- Per housing unit
  - Single Family = $6,027
  - Multifamily = $3,479
- Non-residential (per 1,000 square feet)
  - Retail = $6,119
  - Office = $2,135
  - Industrial = $1,085
  - Institutional = $3,935

Director Fredericksen stated staff performed a cost comparison between Nampa (2019) and Idaho Falls (2022) as well as a cost comparison to the City of Ammon. He indicated the City of Idaho Falls fees would be less than $600 more than the City of Ammon.

Director Fredericksen recognized the Advisory Committee Members and expressed his appreciation to this committee.

Impact Fee Committee Recommendations as of January 24, 2022 include:

- Accept impact fee study and Capital Improvement Plan (CIP) as presented
- Recommend special funds be created for transportation, Fire, Police, and P&R
- Credit for gift of properties/facilities
- Fee implementation
  - Fees be phased in over time
  - Property tax levy over five (5) years
  - 50%/50% payment at building permit and certificate of occupancy

Ordinance:
Director Fredericksen stated the proposed ordinance is modeled from other communities around the State. He also stated the ordinance would include an effective date, fees collected at the building permit stage, provisions to allow credits and exemptions, petition for individual assessments, reimbursement/appeals, and a fee administrator (appointed by the mayor and ratified by the council). Per Councilor Freeman, Director Fredericksen stated a developer could build improvements (traffic) or pay the impact fees. He indicated if the developer chooses to build the improvements this could generate credits toward those improvements.

Timeline:

- February 24, consider the adoption of the impact fee study/CIP (public hearing)
- February 24, consider the impact fee ordinance (public hearing)
- March 31, consider implementation of impact fees through fee resolution

Staff Recommendations:

- Implement the maximum supportable fees (based on public comment and the needs)
- Fee implementation to begin May 1, 2022

Questions regarding the study/CIP –
Director Fredericksen stated the impact fees are intended to address growth. Per Councilor Radford, Mr. McAweeney stated a recreation center could be funded by impact fees if a recreation center would provide a continued level of service. Mr. Fugal reiterated impact fees are intended to meet/maintain the same level of services. Per Mayor Casper, Mr. Fugal stated State Statute requires impact fees be re-evaluated every five (5) years. He also stated the Impact Fee Advisory Committee would be involved in any study. Mr. Fife stated development must pay for itself to keep same level of service, he noted the impact fees are an analog to development. He believes this will move growth into a more formal level of service, it will be more precise, and it will be easy to show where the fee(s) came from and where the fee(s) will be distributed in the fee categories. Discussion followed regarding the Law Enforcement Complex (LEC). Mr. Fugal stated a portion of impact fees will go toward the LEC. Councilor Burtenshaw questioned if specific parks identified in the study are required. Mr. Fugal stated all needs will need to be addressed.

Questions regarding ordinance –
Director Fredericksen stated specific questions for the proposed ordinance could be submitted to Mr. Fife.

Questions regarding fees to implement and implementation date –
Director Cramer stated the city continues to grow. He noted, based on the classification of the ordinance, there are more than 500 permits issued for single-family dwellings this year, which would amount to a significant number.

He also noted approximately 80% of residential permits have been issued for multi-family residential. Per Councilor Freeman, Director Cramer stated permits for summer construction have already begun, although, he noted permits are submitted almost year-round. He believes May 1 is a balanced approached. Per Mayor Casper, Director Fredericksen explained the construction process. Also per Mayor Casper, Director Fredericksen explained the recommendation to phase fees in over time. He believes the city is trying to meet the needs of housing and development in the city. Councilor Burtenshaw questioned any arguments against the 50%/50% as she believes this may impact the lending options for a developer. Brief discussion followed regarding certificates of occupancy. Per Council President Dingman, Director Cramer confirmed the 50%/50% was recommended by the working group, not by staff. Councilor Radford believes higher fees slow the single-family growth, although these higher fees would help with the growing cost. However, he also believes these fees will increase the housing costs, he is unsure how to deal with this. Councilor Radford believes the county is reluctant for these fees although the county needs to be convinced of these fees. He expressed his appreciation for the amount of work by all involved. Councilor Freeman believes individuals will choose if they want to live in the city, he also believes these fees will provide better services. Per Mayor Casper, Director Fredericksen explained when impact fees could be applied to modification of a current residential home. Councilor Hally believes the impact of these fees will be small. General comments followed including construction costs and contracts, the fees being included in a fee resolution (not in the ordinance), the 50%/50%, and the Certificate of Occupancy.

Police, Public Works/Discussion: Law Enforcement Complex:
Director Fredericksen reviewed the project bidding information –
Advertisement: February 6, 2022
Plan Availability: February 10, 2022
Prebid Meeting: February 24, 2022
Bid Opening: March 21, 2022 (pending any addendums)
Bid Award Consideration: March 31, 2022
Estimated Construction Duration – 18 Months

Director Fredericksen stated he anticipates a lot of interest in this project. Per Councilor Radford, Director Fredericksen stated the engineer estimates have been updated with current construction costs, and estimates are under the $30M. He noted the furniture, fixtures, and equipment (FFE) will not be part of the bid package, staff believed the FFE would be better as a separate bid project.

Mayor and Council/Discussion: Public Comment:
Mayor Casper stated several suggestions, letters of comments, and additional information have been submitted from groups and entities, legal staff, Councilor Francis, and Mr. Cranor regarding this topic. She also stated public comment is a right, it is not required. She indicated any rules and parameters need to be decided if the council wishes to allow public comment. Councilor Hally does not believe public comment should become a public meeting, there should be a time limit. Councilor Radford agreed. Councilor Freeman believes an item included on an agenda, not noted as a public hearing, should be discussed. Councilor Burtenshaw agreed. Mr. Fife explained this process, stating only public hearings are mandated by the law. He indicated comments could be allowed although they would have to be limited to the specific agenda item. Councilor Radford stated he would like to increase public participation. Councilor Freeman would also encourage written comment. Councilor Radford believes the rules should be equitable and consistent. Councilor Francis believes comments should be allowed for regular agenda items, in a limited time, but not before each item as that would appear as a hearing. Discussion followed regarding the time frame for each public comment as well as a sign-in sheet for subject items. Mr. Kirkham discouraged the request for specific subject items per the freedom of speech. Mr. Fife recommended topic to topic comments.

Councilor Burtenshaw believes this would organize the comments and the meeting. Council President Dingman described a draft proposed alternative for topic-to-topic public comment, including a maximum timeframe (15 minutes) and an individual timeframe (3 minutes) per item. Mayor Casper believes the council was elected to study the issues and make excellent decisions on behalf of the citizens of this community. She stated the citizens have multiple ways to communicate with the council. She believes the council should be focusing on what's best for those citizens who are not in the room. She expressed her concern as she believes this might invite uniformed opinions who have not been privy to all information prior to making a decision. Per Mayor Casper, Mr. Cranor explained the policy used by School District 93, stating any comments or complaints toward personnel would require an executive session. Mr. Kirkham believes the School District 93 policy is unconstitutional. He described a court case related to this policy. Mr. Fife stated public comments could also be made through a website. He also stated there are parameters around the first amendment that allow uncomfortable things to happen. Councilor Francis does not believe harassment should be allowed. Discussion followed regarding who would make that decision, a personal attack versus a performance attack, the first amendment, public officials and public employees, the Americans with Disabilities Act of 1990 (ADA) accommodations and equal access, public comments related to matters within the purview of the city council, encouragement of public comment, and limiting public comments to city residents (legal staff does not recommend this). Councilor Radford believes public comment should stay as is, public comment should be encouraged, and the Chair should be allowed to stop a comment if needed and risk any legal action. Councilor Burtenshaw agreed. Mayor Casper believes there should be multiple empowerment, not a dual empowerment. She indicated additional discussion will occur at the February 22 City Council Work Session.

There being no further business, the meeting adjourned at 6:54 p.m.

_____ _____

Kathy Hampton, City Clerk Rebecca L. Noah Casper, Mayor

City Council Meeting

Minutes - Draft

680 Park Avenue
Idaho Falls, ID 83402

Thursday, February 10, 2022 | **7:30 PM** | **City Council Chambers**

1. Call to Order.

Present: Mayor Rebecca L Noah Casper, Council President Michelle Ziel-Dingman, Councilor John Radford, Councilor Thomas Hally, Councilor Jim Freeman, Councilor Jim Francis, and Councilor Lisa Burtenshaw

Also present:
All available Department Directors
Randy Fife, City Attorney
Kathy Hampton, City Clerk

2. Pledge of Allegiance.

Mayor Casper lead those present in the Pledge of Allegiance.

3. Consent Agenda.

A. Municipal Services

1) Treasurer's Report for December 2021
A monthly Treasurer's Report is required pursuant to Resolution 2018-06 for City Council review and approval. For the month-ending December 2021, total cash, and investments total $122.2M. Total receipts received and reconciled to the general ledger were reported at $16.7M, which includes revenues of $15.7M and interdepartmental transfers of $1M. Total disbursements reconciled to the general ledger were reported at $18.7M, which includes salary and benefits of $6.2M, operating costs of $11.5M and interdepartmental transfers of $1M. As reported in the investment report, the total investments reconciled to the general ledger were reported at $113.1M.

2) Quote, Software and License Renewal for Information Technology
This purchase renews software and licenses for the city's use of Artic Wolf software and professional services to monitor network traffic. The quote includes access to the Artic Wolf managed risk platform to monitor network vulnerabilities.

3) Minutes from Council Meetings
January 24, 2022 City Council Work Session and Executive Session; January 27, 2022 City Council Meeting; and January 27, 2022 Special Meeting-Executive Session

4) License Applications, all carrying the required approvals

Recommended Action:

It was moved by Council President Ziel-Dingman, seconded by Councilor Freeman, to approve, accept, or

receive all items on the Consent Agenda according to the recommendations presented. The motion carried by the following vote: Aye - Councilors Freeman, Radford, Burtenshaw, Francis, Dingman, Hally. Nay - none.

4. Regular Agenda.

A. Municipal Services

1) Quotes IF-22-17 and IF-22-18, Cayenta Customer Information System (Utility Billing) Upgrade

The city implemented the Cayenta Customer Information System (Utility Billing) October 1, 2016, with 2012 Microsoft Structure Query Language (SQL) servers. The 2012 version of SQL will no longer be supported beyond July 2022 and IT staff recommends the city transition to the 2019 version of SQL to maintain Microsoft support through January 2030. The first task of the proposed CIS upgrade is the update the city's SQL servers from 2012 to 2019.

The second task will upgrade the CIS system from version 7.9.0 to 9.1 and provide the city an opportunity to build upon the improved customer information platform configured within version 9.1, including options for future add-on enhanced customer convenience modules including pre-pay and time-of-use. The city's field operations team consisting of representatives familiar with the Cayenta system from Municipal Services, Idaho Falls Power and Public Works tested a demo of the 9.1 version and evaluated the benefits to upgrading to version 9.1 in conjunction with the SQL server upgrade. The evaluation process also included contacting organizations that have completed or in the process of completing the CIS upgrade to version 9.1. The consensus of the field operations team is to upgrade to Cayenta's version 9.1.

The quote from Cayenta for $105,820 is provide support and technical assistance to upgrade and migrate version 9.1 to the city's 2019 SQL servers. The quote from BDM Squared is for project management consulting services. BDM Squared was recommended by one of the entities city staff interviewed as a Cayenta reference. The field operations team evaluated the benefits of outsourcing project management services, and the consensus of the team was outsourcing project management services to an experienced consultant would allow the team to focus on system testing and implementation.

Municipal Services Director Pamela Alexander appeared. She stated the field operations team has been in discussion for the previous 6-9 months regarding a plan to successfully upgrade the servers. Per Councilor Freeman, Director Alexander believes a long-term solution is approximately two (2) years out.

It was moved by Council President Ziel-Dingman, seconded by Councilor Burtenshaw, to accept and approve the quotes received from Cayenta, a Division of N. Harris Computer Corporation for $105,820 and BDM Squared Professional Services for $63,875 for a combined total of $169,695. The motion carried by the following vote: Aye - Councilors Hally, Radford, Francis, Dingman, Burtenshaw, Freeman. Nay - none.

B. Idaho Falls Power

1) Pole Attachment License Agreement Renewal with Cable One Inc. dba Sparklight

This reciprocal License Agreement will govern attachments on poles owned by the other entity. The agreement establishes rules for work coordination between the two entities, sets requirements for

make-ready work and establishes fees associated with pole attachments. This supersedes the 2005 agreement with Cable One, Inc.

Idaho Falls Power Assistant Director Stephen Boorman appeared. He stated this agreement is very similar to the previous Cable One agreement. He believes the city should see increased revenue due to the established rates.

It was moved by Councilor Radford, seconded by Councilor Freeman, to approve this renewal agreement with Sparklight, a Delaware corporation, and give authorization for the Mayor and City Clerk to execute the necessary documents. The motion carried by the following vote: Aye - Councilors Francis, Dingman, Freeman, Hally, Radford, Burtenshaw. Nay - none.

C. Police Department

1) Police Personnel Manual Updates

These changes were proposed to make possible a new patrol schedule and to facilitate the training of new employees. The City Council reviewed these updates on Monday December 6 during a work session. All IFPD employees were sent notice of these changes on Tuesday December 7 starting the 30-day review period. Two general meetings were conducted at IFPD where all employees were invited to talk about the changes and give input. All police officer briefings were attended by either myself of one of the Captains to talk with Officers about the proposed changes. A meeting was held with the FOP leadership to talk about the proposed changes as well. The FOP leadership sent a letter outlining some concerns. I responded with a letter outlining why, in my opinion, the concerns were already resolved through the Police Personnel Manual (PPM) language or they were a management decision. In subsequent conversation with the FOP leadership and with most employees of the Department those concerns appear to have been resolved. The 30-day review/comment period has now passed and the Council may now approve the updates to the PPM.

Police Chief Bryce Johnson appeared. He briefly reviewed the proposed changes.

It was moved by Councilor Francis, seconded by Councilor Burtenshaw, to approve the resolution updating the Police Personnel Manual and give authorization for the Mayor and City Clerk to execute the documents. The motion carried by the following vote: Aye - Councilors Freeman, Francis, Hally, Radford, Burtenshaw, Dingman. Nay - none.

RESOLUTION NO. 2022-02
A RESOLUTION OF THE CITY OF IDAHO FALLS, IDAHO, A MUNICIPAL CORPORATION OF THE STATE OF IDAHO, ADOPTING THE IDAHO FALLS POLICE DEPARTMENT PERSONNEL MANUAL (JANUARY 2022); AND PROVIDING THAT THIS RESOLUTION BE EFFECTIVE UPON ITS PASSAGE, APPROVAL, AND PUBLICATION ACCORDING TO LAW.

5. Announcements.

Mayor Casper announced a legislative update from the Association of Idaho Cities (AIC), and the Idaho Falls Police Department (IFPD) Awards Event on February 11 (the IFPD event is not a public event); Valentines Day on February 14; Fiber Open House on February 17; Presidents Day holiday on February 21 (city offices closed); and City Council Work Session, and Dave Nelson (Garage Superintendent) retirement on February 22.

6. Adjournment.

There being no further business, the meeting adjourned at 7:46 p.m.

_____ _____

Kathy Hampton, City Clerk Rebecca L. Noah Casper, Mayor

Memorandum

File #: 21-411 **City Council Meeting**

FROM: Bear Prairie, General Manager
DATE: Wednesday, February 16, 2022
DEPARTMENT: Idaho Falls Power

Subject
Resolution for the proposed Yellowstone Peak Generation Plant and Clean Energy Research Park

Council Action Desired
☐ Ordinance ☒ Resolution ☐ Public Hearing
☐ Other Action (Approval, Authorization, Ratification, etc.)
Approve the resolution supporting the proposed Yellowstone Peak Generation Plant and Clean Energy Research Park and give authorization for the Mayor and City Clerk to execute the necessary documents (or take other action deemed appropriate).

Description, Background Information & Purpose
Idaho Falls Power (IFP), in cooperation with Heber Light and Power and Lehi City Power, will explore potential construction of the Yellowstone Peak Generation Plant and Clean Energy Research Park. The generation plant shall consist of up to 35 megawatts of peaking generation and associated clean energy research facilities including, hydrogen, biofuels and similar non-carbon emitting emerging technologies.

IFP provides safe, reliable, and affordable electric service to city residents. As demand for energy has increased rapidly, so has the need for peak-hour generation as identified in the IFP Strategic Plan. IFP is working to secure affordable, reliable, and environmentally responsible energy resources sufficient to meet the needs of the community.

Alignment with City & Department Planning Objectives

☐ ☐ ☒ ☐ ☐ ☐ ☐ ☐

Maintain IFP's ability to provide reliable and affordable energy to the community which demonstrates our readiness for managed, well-planned growth and development, ensuring that the community infrastructure meets current and future needs. This action also addresses the need for generation capacity identified in the IFP Strategic Plan.

Interdepartmental Coordination

Legal has reviewed and approved this resolution.

Fiscal Impact

This action is budgeted for in the 2021/22 Idaho Falls Power CIP budget.

Legal Review

Legal has reviewed and approved this resolution.

RESOLUTION NO. 2022-

A RESOLUTION OF THE CITY OF IDAHO FALLS, IDAHO, A MUNICIPAL CORPORATION OF THE STATE OF IDAHO, EXPRESSING COUNCIL SUPPORT FOR THE PROPOSED YELLOWSTONE PEAK GENERATION PLANT AND CLEAN ENERGY RESEARCH PARK PROJECT; AND PROVIDING THAT THIS RESOLUTION BE EFFECTIVE UPON ITS PASSAGE, APPROVAL, AND PUBLICATION ACCORDING TO LAW.

WHEREAS, Idaho Falls Power ("IFP") is an Idaho municipal utility that provides safe, reliable, and affordable electric service within the City's service area; and

WHEREAS, the demand for energy from IFP is increasing rapidly due to new growth within its service area; and

WHEREAS, IFP must secure affordable and reliable energy resources sufficient in order to meet the needs of its customers; and

WHEREAS, IFP continues to work to secure necessary dispatchable peak energy resources; and

WHEREAS, IFP desires to develop peaking generation that can utilize clean fuels including hydrogen and bio-fuels; and

WHEREAS, a research facility attached to the peak generation plant shall be utilized to develop and test low carbon and carbon free generation technology that bring together U.S. Department of Energy national laboratory researchers and equipment manufacturers; and

WHEREAS, project participants intend to convert the facility to produce one hundred percent (100%) clean energy as soon as economically commercially, viable technology and fuels become available; and

WHEREAS, IFP, in cooperation with Heber Light and Power and Lehi City Power ("Participants"), IFP has prepared preliminary, nonbinding terms under which the Participants hope to develop and construct the Yellowstone Peak Generation Plant and Clean Energy Research Park, to be located in Idaho Falls (the "Project"); and

WHEREAS, the Council has carefully considered the Project and desires to express its support for the continued exploration and work on developing the Project.

NOW THEREFORE, BE IT RESOLVED BY CITY COUNCIL OF IDAHO FALLS AS FOLLOWS:

1. The Council hereby expresses its support for the Project described in this Resolution and according to the nonbinding terms set forth in this Resolution.

2. The Council expression of support for the Project and support for the Project expressed by the other Participants shall be only a nonbinding expression of the current intent of the respective Participants (with respect to the development, construction, ownership,

and operation of the Project).

3. No contract or agreement between the Participants for any aspect of the Project shall exist unless and until definitive written agreements to that end have been approved by the respective governing bodies of the Participants and executed by all Participants (the "Final Agreements").

4. IFP management and staff are hereby directed to cooperate with the other Participants toward the eventual development of the Project according to the preliminary terms set forth below (the "Terms"), which may change as work toward development of the Project progresses.

5. The Terms under which the Participants desire to jointly work toward development of the Project are as set forth below. The Participants recognize that these Terms are only an expression of the current intent of the Participants and that the eventual Project and Final Agreements may vary from these Terms.

    a. The Project shall consist of twenty-five to thirty-five megawatts (25-35MW) of internal combustion generation, depending upon most cost-effective plant design and other research-related generation facilities.

    b. IFP will be the owner of the Project ("Owner") and shall be responsible for the operation and maintenance of the Project, including pursuant to necessary local, state, and federal permits. Owner will be responsible for dispatch and scheduling for the Project.

    c. Costs incurred by Owner relating to the cost of the Project, operations and maintenance will be paid by the Project.

    d. The Project will be located in Idaho Falls, Idaho, on property leased to the Project by Owner.

    e. All Participants shall be jointly responsible for the design, construction of the Project.

    f. The Project is expected to operate based upon economic availability and reliable deliverability of wholesale energy from the regional market. The Project will provide thirty megawatts (30MW) of capacity which, even when not operating, enables participants to meet regional resource adequacy requirements, with such capacity divided evenly among the Participants. Energy generated by the Project shall be delivered to a substation in Idaho Falls.

    g. The Participants shall have a right of first refusal for any energy generated by various research projects undertaken as part of the Project.

    h. The anticipated commercial operation date of the Project is late 2023.

i. Delivery of energy from the Project shall be subject to a power purchase agreement ("PPA") with each Participant. Each PPA shall be for the total costs of the Project paid over a term of thirty (30) years and shall include standard PPA terms and other terms specific to the Project as may be necessary.

j. The Project shall be governed by a Project Management Committee ("PMC") consisting of representatives from each Participant. The PMC shall set budgets for operation of the Project, allocate costs of the Project as necessary, manage the fuel supply for the Project, and take all other necessary and proper actions relating to operation of the Project.

k. The final written agreements shall be governed by Idaho law.

6. The support for the Project expressed in this Resolution shall in no way bind the City of Idaho Falls or IFP and such support may be withdrawn at any time prior to the execution and delivery of the Final Agreements.

ADOPTED and effective this ____ day of _____, 2022.

ATTEST: CITY OF IDAHO FALLS, IDAHO

_____ _____

Kathy Hampton, City Clerk Rebecca L. Noah Casper, Mayor

(SEAL)

STATE OF IDAHO)
) ss:
County of Bonneville)

I, KATHY HAMPTON, CITY CLERK OF THE CITY OF IDAHO FALLS, IDAHO, DO HEREBY CERTIFY:

That the above and foregoing is a full, true and correct copy of the Resolution entitled, "A RESOLUTION OF THE CITY OF IDAHO FALLS, IDAHO, A MUNICIPAL CORPORATION OF THE STATE OF IDAHO, EXPRESSING COUNCIL SUPPORT FOR THE PROPOSED YELLOWSTONE PEAK GENERATION PLANT AND CLEAN ENERGY RESEARCH PARK PROJECT; AND PROVIDING THAT THIS RESOLUTION BE EFFECTIVE UPON ITS PASSAGE, APPROVAL, AND PUBLICATION ACCORDING TO LAW."

_____

Kathy Hampton, City Clerk

(SEAL)

Memorandum

File #: 21-421 **City Council Meeting**

FROM: Brad Cramer, Director
DATE: Wednesday, February 16, 2022
DEPARTMENT: Community Development Services

Subject
Resolution approving the Eligibility Report for the Pancheri East Bank Urban Renewal District

Council Action Desired

☐ Ordinance ☒ Resolution ☐ Public Hearing
☐ Other Action (Approval, Authorization, Ratification, etc)
Approve the Resolution approving the Eligibility Report for the Pancheri East Bank Urban Renewal District and give authorization for the Mayor and City Clerk to execute the necessary documents (or take other action deemed appropriate).

Description, Background Information & Purpose

Attached is a resolution approving the Eligibility Report for the Pancheri East Bank Urban Renewal District. This is the first step required by Idaho Statute in creating a new urban renewal district. The report reviews the criteria for establishing a district and determines which of the criteria are met for the site. The statute requires that only one of the criteria be met. If the Council approves the report, the Idaho Falls Redevelopment Agency (IFRA) will then be authorized to draft an urban renewal district plan, which will also come back for Council approval. The IFRA board reviewed this report on February 17th and approved the document. It is now being presented for Council approval.

Alignment with City & Department Planning Objectives

☐ ☐ ☒ ☐ ☒ ☐ ☒ ☐

The policies in the plan are consistent with many policies and goals related to Good Governance, Growth, Sustainability, and Livable Communities.

Interdepartmental Coordination

NA

Fiscal Impact

NA

Legal Review

Legal has reviewed the resolution.

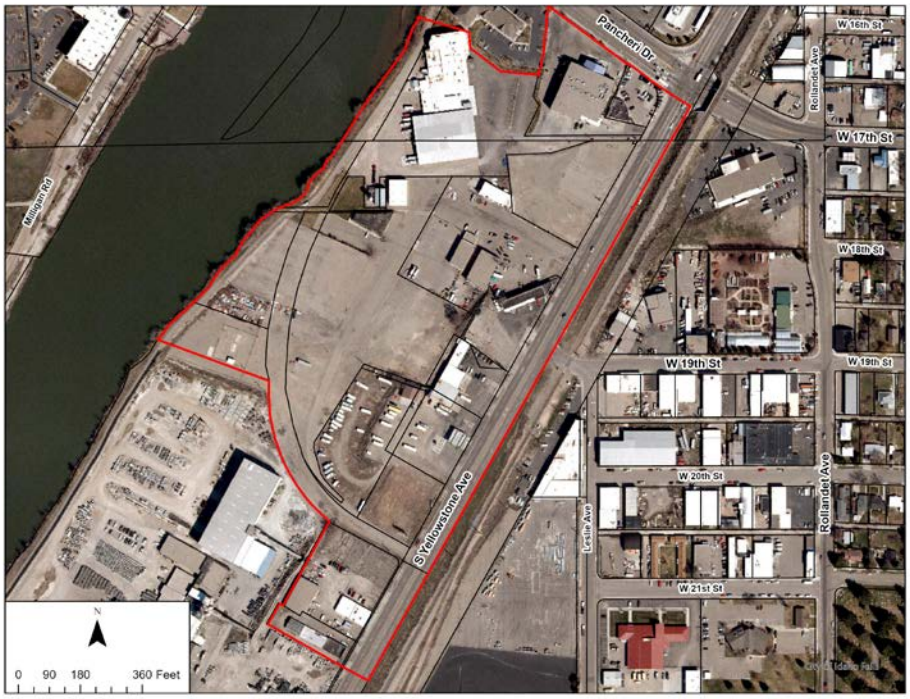

Pancheri East Bank Eligibility Report

Prepared for Idaho Falls Redevelopment Agency, February, 2022

by Renee R. Magee, AICP

Executive Summary

This report examines approximately 36 acres in central Idaho Falls bounded by Pancheri Drive on the north, the Snake River on the west, and Yellowstone Highway on the east (the "Study Area"). The southern boundary moves along the south property lines of the Idaho Falls Power substation, the Capital Avenue extension, and the private parcel addressed as 2160 South Yellowstone Highway. Prior to 2016, this area housed industrial and heavy commercial uses, most of which have ceased operation or have moved elsewhere.

The Study Area is found to be a deteriorating area and/or a deteriorated area and, therefore, is eligible for an urban renewal project under the Idaho Urban Renewal Law of 1965, Chapter 20, Title 50, Idaho Code, as amended, and the Local Economic Development Act, Chapter 29, Title 50, Idaho Code, as amended. The primary reasons for this finding are:

1. **Inadequate street layout/outmoded street patterns.** There is no developed public street with modern paving width, facilities for storm drainage, sidewalks, and illumination in the Study Area. The banks of the Snake River have become prime property for restaurants, motels, offices, and apartments. Unfortunately, there is no street to bring residents and visitors to the east bank of the Snake River. The informal travel ways which used to serve the businesses in the Study Area do not meet modern standards and do not encourage redevelopment of the area.

2. **Economic Underdevelopment and Economic Disuse.** Approximately 60% of the Study Area is vacant or underutilized. In the past, the Study Area housed industrial and heavy commercial uses, a motel, two residences, and a restaurant. As these businesses moved elsewhere or closed, new uses often did not fill the vacant spaces. Yellowstone Highway is no longer the primary regional entrance way to Idaho Falls, and new businesses which depend on traffic counts moved to other locations in the community. Six of the buildings in the Study Area are over 60 years of age. Such buildings often need significant investment to meet the needs of new occupants.

3. **Faulty lot layout in relationship to size, accessibility, or adequacy of usefulness.** Only two of the seventeen privately owned parcels in the Study Area have been platted. There are no platted easements of water and sewer utilities. The parcels are irregular in shape and do not meet modern standards. For the parcels in the interior of the Study Area, access is provided through an underdeveloped right-of-way or through adjacent parcels under the same ownership. The parcel boundaries reflect historic use rather than the needs for new investment.

The Study Area meets the criteria for eligibility. Although this report has found the Study Area is eligible for an urban renewal project, this finding of eligibility does not commit either the Idaho Falls Redevelopment Agency or the Idaho Falls City Council to include any or all portions of the Study Area within an urban renewal project area.

Idaho Falls Redevelopment Agency

The Mayor, with the confirmation of City Council, has appointed seven individuals to the Idaho Falls Redevelopment Agency, the urban renewal agency of the City of Idaho Falls:

Lee Radford, Chair
Brent Thompson, Vice-Chair
Terri Gazdik, Secretary
Tom Hally
Kirk Larsen
Jon Walker
Christopher Harvey

The Agency, originally created on July 6, 1966, was re-established by the Mayor and Council on October 20, 1988, for the purpose of eliminating blight in the Snake River Urban Renewal District (formerly Lindsay Boulevard Urban Renewal District). The Snake River Urban Renewal District expired in 2018. The Pancheri-Yellowstone Urban Renewal District ("Pancheri District") was terminated after eleven years in 2019. The Agency now administers three urban renewal areas: River Commons, Eagle Ridge, and Jackson Hole Junction.

Brad Cramer serves as the executive director of the Agency. Elam and Burke is the legal counsel. In the Fall of last year, 2021, the Agency engaged the services of Renee Magee to prepare an eligibility report to determine if the Study Area meets the criteria for consideration as an urban renewal area (URA).

Background

In response to federal programs funding redevelopment of "blighted" urban areas in the mid twentieth century, Idaho passed the Idaho Urban Renewal Law of 1965. The law authorized Idaho municipalities to identify blighted and deteriorating areas within their communities and to use federal grant monies to improve and, if necessary, redevelop these areas. Support for such federal expenditures dissipated and eventually ended in the early 1970's. With the loss of federal support, states needed another tool to assist cities to redevelop blighted areas and to participate in the economic vitality of their communities. Idaho cities have a significant financial challenge in responding to the infrastructure demands of growth along with the on-going need to maintain the existing physical plant in good repair. Idaho cities face stringent constitutional limitations and near total dependence upon state legislative action to provide funding. An Idaho city's access to funding sources and the ability to employ effective financing mechanisms such as general obligation bonding severely constrain capital investment strategies.

The tools available to cities in Title 50, Chapters 20 and 29, the Urban Renewal Law of 1965 and the Local Economic Development Act, are some of the few available to assist communities in their efforts to support economic vitality. New sources of State support are not likely to become

available in the foreseeable future, thus the Idaho Falls Redevelopment Agency's on-going interest in exploring the potential for establishing additional urban renewal areas is appropriate.

Purpose of Report

This report focuses on a Study Area of 36 acres immediately east of the Snake River, south of Pancheri Drive, and west of Yellowstone Highway. The southern parcels in the Study Area are the Idaho Falls Power substation, the right-of-way for Capital Avenue, and the properties addressed as 2130 and 2160 South Yellowstone Highway. This Study Area includes a portion of the Pancheri District which closed after eleven years. It does not include the northwest portion of the former Pancheri District in which the developers of a new motel received tax increment funds and, thus, does not include development assisted previously with urban renewal financing. The Study Area includes twenty-three parcels, seventeen of which are in private ownership. The private parcels range in size from 100 square feet to 6.25 acres and occupy slightly over 25 acres of the Study Area. River Walk, Yellowstone Highway, an Idaho Falls Power sub-station, and the right-of-way for Capital Avenue extended are the publicly owned parcels in the Study Area.

Land uses in the Study Area consist of commercial businesses, older industrial and warehousing uses, open storage, and vacant lands. The Idaho Falls power sub-station is located in the southwestern corner of the Study Area, and a transmission line travels north adjacent to the Snake River. Industrial development began in this area in the 1940s according to Bonneville County parcel records. Wholesale and cold storage uses were constructed in the mid-1990s near the intersection of Capital and Pancheri. Today there is little demand for the historic industrial and heavy commercial uses which formerly occupied the Study Area.

Almost sixty percent of the private parcels in the Study Area are either vacant or underutilized. Growth and development are bypassing this Study Area, although it is on the Snake River and in the central portion of Idaho Falls. The largest building in the Study Area, a manufacturing facility for former King B, has been vacant since 2015. The site of a popular restaurant, LeBaron's, which served residents and visitors for over fifty years near the intersection of Pancheri and Yellowstone was demolished after a fire, and the site remains vacant. In contrast, the lands around these 36 acres are being developed and are becoming a healthy commercial center. On the west bank of the Snake River, Snake River Landing, a mixed-use development, has been under development since 2004. North of Snake River Landing, the Utah Avenue area has developed since 2000 with commercial uses, and many of the vacant parcels north of Pancheri Drive and west of the Snake River have been infilled with commercial uses.

The purpose of this report is to determine if all or a portion of the Study Area meets the criteria

outlined in Idaho statutes, Idaho Code Sections 50-2008, 50-2018, and 50-2903, for an urban renewal area. This report is the first step to assist the Idaho Falls City Council determine if there is a need for creating an urban renewal area in a portion or all of the Study Area.

Steps in Creating an Urban Renewal Area (URA) and Revenue Allocation Area (RAA)

If an urban renewal agency is in existence in a community, the creation of an urban renewal area, including a revenue allocation area (tax increment financing), begins with an eligibility report for a designated area within the community. The purpose of the eligibility report is to determine if the studied area qualifies for an urban renewal area. The central question is whether the Study Area has at least one of the characteristics which must be found to be considered eligible for urban renewal activities. These characteristics or criteria are:

1. The presence of a substantial number of deteriorated or deteriorating structures and deterioration of site [50-2018(9), 50-2903(8)(b) and (8)(c), and 50-2008(d)(4)(2)],
2. Age or obsolescence [50-2018(8) and 50-2903(8)(a)],
3. Predominance of defective or inadequate street layout [50-2018(9) and 50-2903(8)(b)],
4. Outmoded street patterns [50-2008(d)(4)(2)],
5. Need for correlation of area with other areas of municipality by streets and modern traffic requirements [50-2008(d)(4)(2)],
6. Faulty lot layout in relation to size, adequacy, accessibility, or usefulness (50-2018(9) and 50-2903(8)(b)],
7. Unsuitable topography or faulty lot layouts [50-2008(d)(4)(2)],
8. Insanitary or unsafe conditions [50-2018(9) and 50-2903(8)(b)],
9. Diversity of ownership [50-2018(9), 50-2903(8)(b) and (8)(c), and 50-2008(d)(4)(2)],
10. Tax or special assessment delinquency [50-2018(9) and 50-2903(8)(b)],
11. Defective or unusual conditions of title [50-2018(9) and 50-2903(8)(b)],
12. Substantially impairs or arrests the sound growth of a municipality [50-2018(9) and 50-2903(8)(b)],
13. Conditions which retard development of the area [50-2018(9)], and
14. Results in economic underdevelopment of the area [50-2903(8)(b) and economic disuse [50-2008(d)(4)(2).

If it is determined the Study Area has characteristics which meet one or more of the statutory criteria listed above, the Agency may approve the eligibility report and request its consideration by the governing body. No URA can be formed unless the City Council adopts a resolution finding the area under consideration is deteriorated or deteriorating due to such characteristics, the redevelopment of the area is necessary for the welfare of the residents, and the area is appropriate for an urban renewal project.

The resolution approved by City Council authorizes the Agency to prepare a plan for the proposed urban renewal area. The urban renewal area plan is to include the following:

(1) The total assessed valuation of the base assessment roll of the proposed

revenue allocation area and total assessed valuation of the city;
(2) A list of the proposed public improvements in the proposed revenue allocation area;
(3) An economic feasibility study (a projection of revenues and anticipated costs with a time line);
(4) A detailed list of estimated project costs;
(5) A statement showing the impact of revenue allocation area on all tax districts levying taxes upon property within revenue allocation area;
(6) A description of anticipated financing methods and time line for incurring such costs;
(7) A termination date for plan and revenue allocation area; and
(8) A plan for distributing revenues at the termination date, including any plans for Agency to retain any assets acquired during the life of the district.

Once the plan is prepared and approved by the Agency, it is forwarded to the City Council. Prior to scheduling the public hearing before the City Council, the City forwards the plan to the city planning commission for its determination that the plan conforms to the city's comprehensive plan. After receiving the recommendation of the planning commission, the public hearing is scheduled, notice of the hearing is published, and a copy of the notice and plan is sent to all taxing entities. The Council must approve an urban renewal district, including the revenue allocation area, by an ordinance. If the ordinance is adopted by the City Council, a copy of the ordinance with legal description of the URA is distributed to all the taxing entities and the State Tax Commission.

By state statute, an ordinance approving an URA and RAA is effective January1 of the year in which it is adopted: this retroactive effect recognizes projects necessary to generate tax increment may have begun prior to plan approval to meet private deadlines and encourage economic development. The RAA has a maximum life of twenty years under Idaho statutes. The urban renewal agency implements the plan adopted by the city council.

Present Conditions in the Study Area

Buildings and Site Conditions. The newest buildings in the Study Area were constructed in the mid-1990's according to the assessor records of Bonneville County and are 25 years old or more. One building was constructed in 1978. The remainder of the buildings were constructed in the period of 1940 to 1960. Buildings older than 60 years may need significant upgrades to support new tenants, meet the demands of new technologies, and eliminate hazards such as asbestos and lead paint found in older buildings.

The value of improvements/structures on the land generally exceeds the value of the land. But in the Study Area, on five of the private parcels, the value of the land exceeds the value of the structures according to Bonneville County tax records. On another six private parcels, there are either no improvements or the improvements have no assessed value. The value of the land

exceeds the value of the improvements/structures on sixty-five percent of the private parcels in the Study Area.

Streets. The Study Area has access to two arterial streets, Pancheri Drive and Yellowstone Highway, primarily through private driveways. There is no developed public interior road pattern with modern paving width, facilities for storm drainage, sidewalks, and illumination in the Study Area. Acquisition by landowners in the past decade has reduced the number of landlocked parcels in the Study Area but there is still no improved public road system to entice private investment and development to interior of the Study Area or the banks of the Snake River.

There is a parcel which curves through the Study Area and is intended to be the right-of-way for the extension of Capital Avenue. A portion of this parcel now houses the River Walk east of the Snake River. Much of the northern portion of the right-of-way is less than fifty feet in width and does not meet current city of Idaho Falls standards for a public street. A portion of this right-of-way is bisected by private ownership.

Lot Layout. With the exception of two lots adjacent to Pancheri Drive in the Study Area, the private parcels have not been platted. The parcels are irregular in shape and often do not meet the needs for new development, required parking facilities, and driveway approaches to public streets. Some of the parcels have access issues. In the past, access to the lots on the western edge of the Study Area depended on informal shared use of private travel ways through the central portion of the Study Area and the use of the underdeveloped public right-of-way.

Water Distribution System and Sewer Collection System. There is little documentation as to sizing or condition of the water and sewer utilities in the Study Area. The age of development in the Study Area indicates there may be issues with materials and condition. The utilities are considered to be private: there are no public easements for utilities. The existing documentation of the area, which is limited, shows the main water main in the Study Area does not loop. It simply dead ends; therefore, the water main does not provide consistent water service or adequate fire protection to the interior of the Study Area.

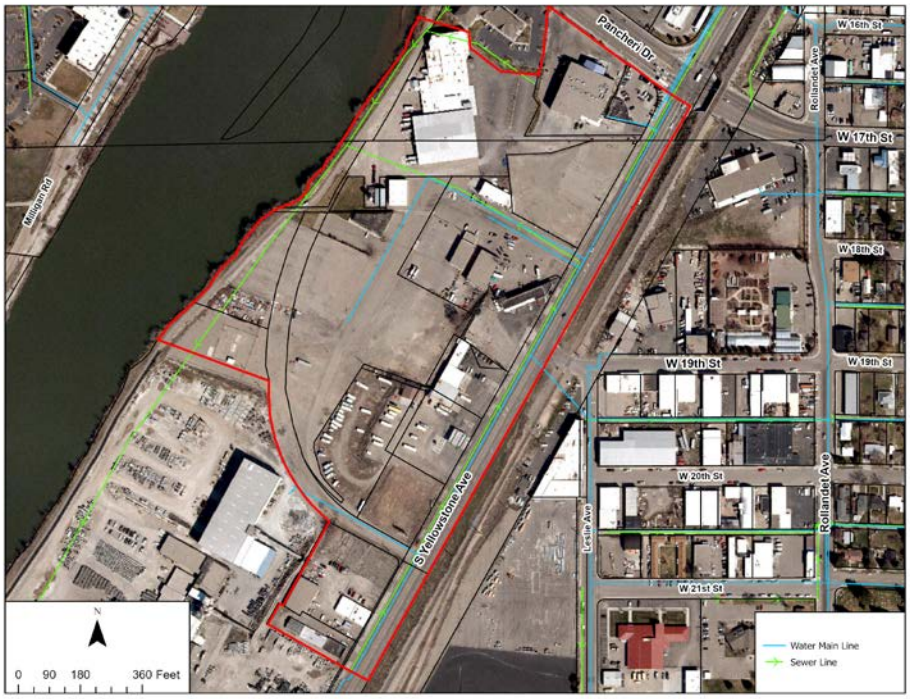

SOURCE: Idaho Falls Community Development Services. Utilities mapping, Public Works.

Topography and Floodplains. Elevation changes significantly from Yellowstone Highway to the east bank of the Snake River in the Study Area. Slopes, which are unimproved dirt banks, exist approximately 200 feet west of Yellowstone Highway in the southern portion of the Study Area.

According to the Idaho Flood Hazard Map, about one half of the Study Area is within Zone X, which is commonly known as the 500 year floodplain. Zone X is an area of minimal flood hazard; however, such an area may have ponding and drainage problems.

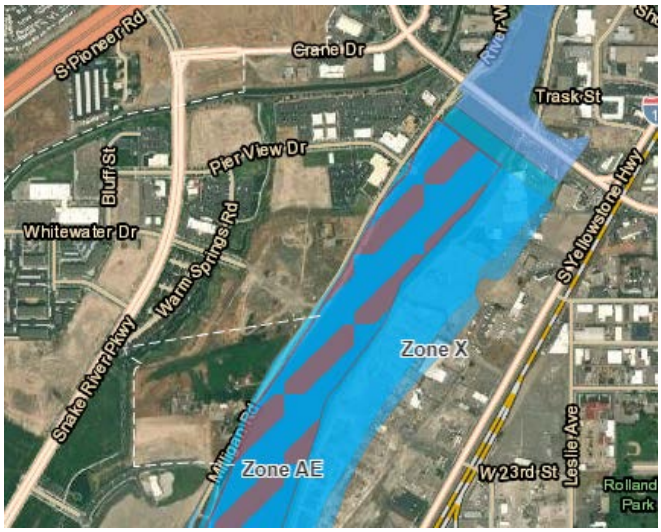

SOURCE; Idaho Flood Hazard Map.
https://idwr.maps.arcgis.com/apps/webappviewer/index.html?id=c8b7dc8f90a147d19455bdc92b81410a

Comprehensive Plan and Future Development. The City of Idaho Falls is in the process of updating its comprehensive plan. The future land use map in the proposed plan, ***ImagineIF***, envisions the area as Mixed Use Corridor and Urban Center/Core. Mixed use corridors are those areas where people eat, shop, and gather. Snake River Landing, the development to the immediate west, is an example. The Urban Center is characterized by taller structures, mixed use buildings, pedestrian oriented facilities, and commercial enterprises. The proposed comprehensive plan illustrates the concept of extending Capital Avenue through the Study Area to Yellowstone Highway. Development of this concept of a street or a similar concept will open the lands adjacent to the Snake River to a public road.

Commented [KK1]: Confirm reference to comprehensive plan

The policies/implementation strategies of the proposed comprehensive plan recommend the use of tax increment financing to support redevelopment of business areas, the improvement of connections including pedestrian facilities, and encouragement of property maintenance.

Commented [KK2]: Confirm reference to comprehensive plan

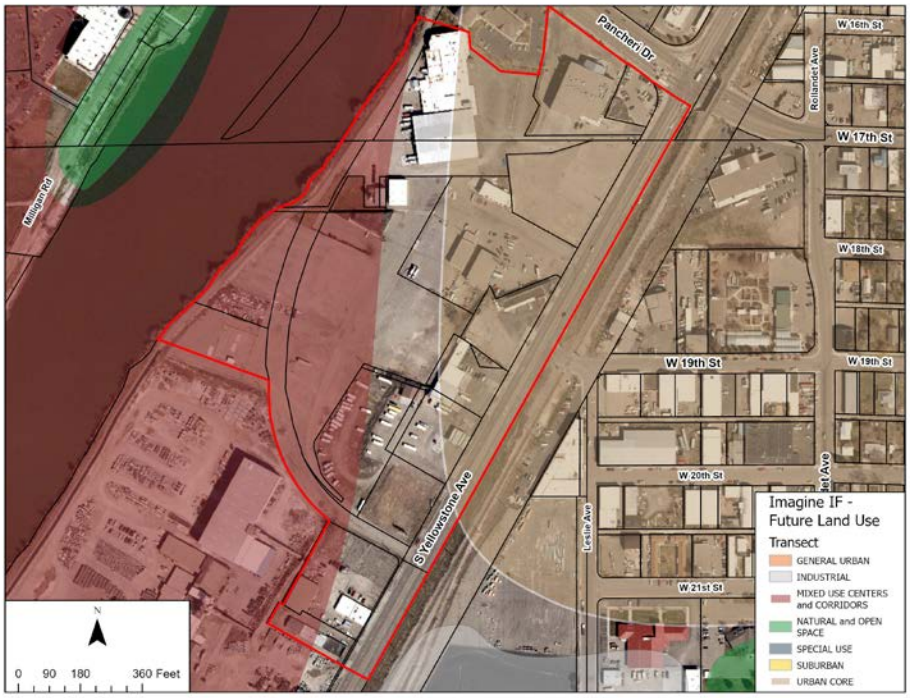

SOURCE: Idaho Falls Community Development Services, ***ImagineIF*.**

Ten Percent Limitation on Assessed Valuation within Revenue Allocation Area

In addition to the statutory criteria required for eligibility and outlined in this report, Idaho statutes limit the assessed valuation permitted in a revenue allocation area. The base assessment rolls are not to exceed at any time ten percent of the current assessed valuation of all taxable property within the municipality.

> "Revenue allocation area" means that portion of an urban renewal area .... where the equalized assessed valuation (as shown on the taxable property assessment rolls) of which the local governing body has determined, on and as a part of the urban renewal plan, is likely to increase as a result of the initiation of an urban renewal project .... The base assessment roll or rolls of revenue allocation area or areas shall not exceed at any time ten percent (10%) of the current assessed valuation of all taxable property within the municipality.

Idaho Code Section 50-2903(15).

The Data Processing Department of Bonneville County provided the City of Idaho Falls assessed value as well as the adjusted base of the existing urban renewal areas.

Statutory Ten Percent Limitation Analysis		
Area	Assessed Value	Percentage
City of Idaho Falls	$4,717,310,703	
	Adjusted Base	
River Commons URA	$298,715	
Eagle Ridge URA	$7,407,708	
Jackson Hole Junction URA	$452,748	
Pancheri East Bank Proposed URA[1]	$7,189,657	
Total Assessed Base URAs	$15,424,289	0.33%

SOURCE: Bonneville County Data Processing, January, 2022. PM106-2020 Annual Assessed Value, Real Property, Personal Property, Mobile Home. URD055, Urban Renewal by Pin within TAG.

The total adjusted base of the existing URAs and the Pancheri East Bank Study Area will not exceed the ten percent limitation. The base of all URAs, including a new Pancheri East Bank URA, will be less than 1% of the assessed valuation of Idaho Falls or less than $47,173,107.

Findings

To find a study area is eligible for considering the creation of an URA and RAA, the study area must contain one or more of the statutory criteria spelled out in Idaho Code Sections 50-2008, 50-2018, and 50-2903. Below are the criteria and a brief discussion of the findings.

The presence of a substantial number of deteriorating or deteriorated structures and deterioration of site. An on-site inspection did not reveal a substantial number of deteriorating or deteriorated buildings. One cinder block building does need maintenance. Of the nine buildings for which Bonneville County has construction date data, six buildings were constructed in 1960 or earlier and are over 60 years in age. Such older buildings often need significant upgrades to meet the demands of new occupants and to eliminate hazards such as asbestos or

[1] This figure is the total of the assessed valuations in the Study Area as found on the Bonneville County Parcel Viewer, January, 2021.

lead paint.

The on-site inspection did reveal paved parking areas are generally well maintained. However, much of the Study Area is not paved. The dirt/gravel travel and parking areas are rutted and subject to ponding. There is no on-site storm retention. While the criterion may not be met for deteriorating/deteriorated buildings in the Study Area, it is met for the parking and travel areas in the Study Area.

Predominance of defective or inadequate street layout. There is no public street serving the interior of the Study Area. Since there is no public street, there are no storm drainage facilities, street lighting, or pedestrian facilities. The long-range plan of the city of Idaho Falls has been to serve the area with a public street, i.e., the extension of Capital Avenue. The intersection of Capital Avenue and Pancheri Drive will provide a signalized access to the area. The Study Area has an inadequate street layout.

Faulty lot layout in relationship to size, adequacy, accessibility, or usefulness. With the exception of two lots fronting Pancheri Drive, parcels have not been platted. Many parcels are irregular in shape as illustrated by the Bonneville County Parcel Viewer, and some parcels do not have direct access to Yellowstone Highway. The only public access to interior parcels is provided by the underdeveloped right-of-way for Capital Avenue or by adjacent parcels under the same ownership. There are no platted public easements for water and sewer utilities.

The southern lots along Yellowstone Avenue, some of which are approximately one acre in size or less and 200 feet in depth, may not meet the needs for modern development with adequate parking. This criterion is met.

Diversity of ownership. There are eight private property owners in the Study Area. The acreages held by these private property owners range in size from 100 square feet to almost 12 acres. Two owners own about 4 acres each. This criterion is not met.

Defective or unusual conditions of title. The research done for this eligibility study did not address this issue and, therefore, did not reveal any defective titles. This criterion is not met.

Tax delinquency assessment exceeding the value of land. The research completed for this study did not address this issue. Consequently, there is not sufficient evidence to state this criterion has been met.

Insanitary or unsafe conditions. Pedestrian facilities are deficient on Yellowstone Highway, a major arterial street. Inadequate water mains are a fire protection issue. This criterion is met.

Outmoded street patterns. There is no street pattern with the Study Area. The private driveways to Yellowstone Highway do not meet current standards for width and spacing. This criterion is met.

Unsuitable topography. The slope approximately 200 feet west of Yellowstone Highway presents an impediment to development. The 500 year floodplain, like the slope, will not prohibit development but it may present issues such as a high water table or drainage issues which increase development and maintenance costs. This criterion is met.

Age or obsolescence. Six buildings are over 60 years of age in the Study Area. Buildings this age present issues with building code compliance, may need extensive upgrades for economic reuse, and may present hazards such as asbestos which requires abatement. One of these buildings, the largest building in the Study Area, a former manufacturing facility, has been vacant since 2015. One of the larger properties in the Study Area has been essentially vacant or underutilized for over ten years. This criterion is met.

Need for correlation of the area streets with other areas of the municipality. The Study Area includes the right-of-way for Capital Avenue extended. However, it has not been developed to current standards and does not connect Pancheri Drive and Yellowstone Highway. The Idaho Falls Public Works Department believes a road in this Study Area which connects with the Capital Avenue at a signalized intersection will benefit the overall transportation network in this area of the city. This criterion is met.

Conditions which retard development of the area. Infrastructure deficiencies such as the lack of a modern street with street lights and sidewalks and inadequate water and sewer utilities retard redevelopment in the Study Area. This criterion is met.

Economic disuse or underdeveloped property. Although the Study Area is centrally located in Idaho Falls and at the intersection of two arterial streets, almost sixty percent of the Study Area is vacant or underutilized. Three parcels are used for outdoor storage. A convenience store has been converted to a used car lot due to access issues at the busy intersection of Yellowstone Highway and Pancheri Avenue. One larger parcel near the intersection of Pancheri Avenue and Yellowstone Highway has been vacant for over twenty years. Other major properties have been vacant for six to ten years. There has been no interest in restoring the industrial or heavy commercial uses previously found in the Study Area. This criterion is met.

Substantially impairs or arrests the sound growth of the municipality. The long-range plan of the City of Idaho Falls is to have a thriving mixed-use corridor along the Snake River, a corridor which houses facilities for visitors and residents such as motels, restaurants, and entertainment businesses and higher density housing and supportive businesses. The Study Area was an industrial area which housed a meat processing business, a lumber yard, an office and open storage for a construction business, an oil distribution business, and a small motel. The lumber yard is gone as is the construction business, and the factory supporting the meat processing business in closed. The former land uses no longer support the vision of the community. Without substantial investment, both private and public, the Study Area will remain underutilized. This criterion is met.

Below and on the following page are two aerial photos, one from 1992 and one from 2016,

which illustrate the changes in land use and the increase in vacant land in the Study Area.

1992 Aerial Photo of Pancheri East Bank Study Aerial.

2016 aerial photo of Pancheri East Bank Study Area.

Conclusion

The proposed Pancheri East Bank urban renewal area meets the criteria for eligibility under Idaho Code Sections 50-2008(d), 50-2018(9) and 50-2903(8)(b). The Study Area is characterized by an inadequate street, vacant lands, inadequate utilities, and a faulty lot layout for modern development. The area in its present condition impairs the growth and development of Idaho Falls.

Criterion	Criterion Met?	Characteristics Supporting Finding
Substantial deterioration of site	Yes	Much of the Study Area is presently vacant, and former parking areas and travel ways were never developed to meet current standards. Many are now deteriorated.
Defective street layout or inadequate street layout	Yes	There is no public street though the Study Area. Access depends primarily on private driveways which do not meet current standards. The right-of-way for Capital Avenue extended does not meet current standards for a public street.
Faulty lot layout	Yes	A large portion of Study Area does not have dedicated access to an improved street. The parcels are shaped irregularly. There are no dedicated easements for public utilities. Lots adjacent to Yellowstone Highway may not have the depth or width for modern development.
Diversity of ownership	No	
Unusual conditions of title	No	None known
Tax delinquency	No	None known
Unsafe conditions	Yes	Pedestrian facilities on Yellowstone Highway are deficient. Without a developed street in the area, there are no street lights or pedestrian facilities in the interior of the Study Area. The water main is not looped.

Outmoded street patterns	Yes	There is no street pattern to serve these 36 acres or to connect the area with surrounding neighborhood.
Unsuitable topography	Yes	A slope is located approximately 200 feet west of Yellowstone Highway. About half of the area is covered by the 500 year floodplain. Neither condition will prohibit development but may increase development costs and maintenance costs.
Age or obsolescence	Yes	Six buildings are over 60 years. Almost 60% of the acreage in private parcels is vacant or underutilized. Former industrial and heavier commercial uses have moved from the area: the properties have failed to redevelop.
Lack of correlation with streets in municipality	Yes	Capital Avenue has not been extended into the Study Area. There is no street pattern which coordinates with the transportation network of this area of Idaho Falls.
Conditions which retard development of the area	Yes	The lack of both a developed public street and water and sewer utilities which meet current standards hinder redevelopment of the area.
Economic underdevelopment of the area	Yes	Although the Study Area lies next to the Snake River and at the intersection of two arterial streets, the amount of vacant land has been increasing over the past thirty years. Private reinvestment has been very limited.
Arrests or impairs the sound growth of the municipality	Yes	Industrial and heavy commercial users have abandoned this Study Area and left major vacancies. Substantial public and private investments are needed to redevelop the Study Area and implement the long-range plan of the city. Without assistance, sound growth will be impaired in this central portion of the city.

SOURCES AND REFERENCES FOR ELIGIBILITY REPORT

Thank you to Kerry Beutler, Assistant Planning Director, and Caitlin Long, Planner 1, Idaho Falls Community Development Services, for their assistance in completing this report.

1. Bonneville County Parcel Viewer. Value of improvements and age of buildings based on tax assessment date found on parcel viewer, 2021-22.
2. Idaho Flood Hazard Map.
3. Valuation Department, Bonneville County, telephone call with Naomi, December 16, and December 20, 2021.
4. Data Processing, Bonneville County, D. Whillock, email, January 7, 2021.
5. Kerry Beutler, Idaho Falls Community Development Services, email, December 10, 2021.
6. ***Imagine IF*,** proposed comprehensive plan for the City of Idaho Falls, pgs. 68-70, 90-91, 107, 112.
7. Photos, Kerry Beutler, December 10, 2021.
8. Photos, Renee Magee, December 31, 2005.
9. Harlan Mann, Preliminary Urban Renewal Eligibility Report, South of Pancheri Drive, February 14, 2007.
10. Exhibit C-1, City of Idaho Falls, Idaho, Comprehensive Annual Financial Report, September 30, 2019. https://www.idahofallsidaho.gov/Archive/ViewFile/Item/4528
11. 1992, 2000, 2012, and 2016 aerial photos of Idaho Falls. Community Development Services, City of Idaho Falls.
12. Email from water and sewer department superintendents to Kerry Beutler, December, 2021.

On-line references for above sources:
Bonneville Parcel Viewer:
https://www.arcgis.com/apps/webappviewer/index.html?id=f5f27c3e084449c3b933b019a9b7444b
Idaho Flood Hazard Map.
https://idwr.maps.arcgis.com/apps/webappviewer/index.html?id=c8b7dc8f90a147d19455bdc92b81410a

RESOLUTION NO. 2022-

A RESOLUTION OF THE CITY OF IDAHO FALLS, IDAHO, A MUNICIPAL CORPORATION OF THE STATE OF IDAHO, DETERMINING A CERTAIN AREA WITHIN THE CITY TO BE DETERIORATED OR DETERIORATING AREA AS DEFINED BY IDAHO CODE SECTIONS 50-2018(9) AND 50-2903(8); DIRECTING THE URBAN RENEWAL AGENCY OF IDAHO FALLS TO COMMENCE THE PREPARATION OF AN URBAN RENEWAL PLAN SUBJECT TO CERTAIN CONDITIONS, WHICH PLAN MAY INCLUDE REVENUE ALLOCATION PROVISIONS FOR ALL OR PART OF THE AREA; PROVIDING SEVERABILITY, CODIFICATION, PUBLICATION BY SUMMARY, AND ESTABLISHING EFFECTIVE DATE.

WHEREAS, on July 6, 1966, the City Council ("Council") of the City of Idaho Falls, Idaho ("City") and the Mayor of Idaho Falls ("Mayor") created the Urban Renewal Agency of the City of Idaho Falls, Idaho, also known as the Idaho Falls Redevelopment Agency, an independent public body, corporate and politic, authorized under the authority of the Idaho Urban Renewal Law of 1965, Chapter 20, Title 50, Idaho Code, as amended ("Law") and the Local Economic Development Act, Chapter 29, Title 50, Idaho Code, as amended ("Act"), a duly created and functioning urban renewal agency for Idaho Falls, Idaho ("Agency"); and

WHEREAS, the City, on October 14, 2004, after notice duly published, conducted a public hearing on the River Commons Urban Renewal Plan ("River Commons Plan"); and

WHEREAS, following said public hearing, the City adopted Ordinance No. 2256 on October 14, 2004, approving the River Commons Plan and making certain findings; and

WHEREAS, the City, on December 11, 2014, after notice duly published conducted a public hearing on the Urban Renewal Plan for the Eagle Ridge Urban Renewal Project ("Eagle Ridge Plan"); and

WHEREAS, following said public hearing, the City adopted Ordinance No. 2978 on December 11, 2014, approving the Eagle Ridge Plan and making certain findings; and

WHEREAS, the City, on November 9, 2017, after notice duly published conducted a public hearing on the Urban Renewal Plan for the Jackson Hole Junction Urban Renewal Project ("Jackson Hole Junction Plan"); and

WHEREAS, following said public hearing, the City adopted Ordinance No. 3142 on November 9, 2017, approving the Jackson Hole Junction Plan and making certain findings; and

WHEREAS, the above referenced urban renewal plans and their project areas are collectively referred to as the "Project Areas"; and

WHEREAS, it has become apparent that additional property within the City may be deteriorating and/or deteriorated and should be examined as to whether such an area is eligible for urban renewal planning purposes; and

WHEREAS, in the fall of 2021, the City engaged the services of Renee R. Magee, AICP to commence an eligibility study and preparation of an eligibility report of an area thirty-six (36) acres in size, bounded by Pancheri Drive on the north, the Snake River on the west, and Yellowstone Highway on the east. The southern boundary moves along the south property lines of the Idaho Falls Power substation, the Capital Avenue extension, and the private parcel addressed as 2160 South Yellowstone Highway. The eligibility study area is commonly referred to as the Pancheri East Bank Study Area ("Study Area"). All parcels in the Study Area are located within City limits; and

WHEREAS, the Agency has obtained the Pancheri East Bank Eligibility Report, dated February 2022 ("Report"), a copy of which is attached hereto as Exhibit A, which examined the Study Area for the purpose of determining whether such area was a deteriorating area and/or a deteriorated area as defined by Idaho Code Sections 50-2018(9) and 50-2903(8); and

WHEREAS, pursuant to Idaho Code Sections 50-2018(9) and 50-2903(8), which lists the definition of deteriorating area and deteriorated area, many of the conditions necessary to be present in such an area are found in the Study Area, including:

a. substantial number of deteriorated or deteriorating structures and deterioration of site;
b. predominance of defective or inadequate street layout;
c. faulty lot layout in relation to size, adequacy, accessibility, or usefulness;
d. diversity of ownership;
e. defective or unusual conditions of title;
f. tax delinquency assessment exceeding the value of the land;
g. insanitary or unsafe conditions;
h. outmoded street patterns;
1. unsuitable topography;
J . age or obsolescence;
k. need for correlation of the area streets with other areas of the municipality;
I. conditions which retard development of the area;
m. economic disuse or underdeveloped property; and
n. substantially impairs or arrests the sound growth of the municipality; and

WHEREAS, the effects of the listed conditions cited in the Report result in economic underdevelopment of the area, substantially impairs or arrests the sound growth of a municipality, constitutes an economic or social liability, and is a menace to the public health, safety, morals or welfare in its present condition or use; and

WHEREAS, the Agency on February 17, 2022 adopted Resolution No. [enter] (a copy of which is attached hereto to Exhibit B) accepting the Report and authorizing the Chair of the Agency to transmit the Report to the Council requesting the Council's consideration for the designation of an urban renewal area and requesting that the Council direct the Agency to prepare an Urban Renewal

Plan for the Pancheri East Bank Area, which Plan may include a revenue allocation provision as allowed by law; and

WHEREAS, under the Act, a deteriorated area includes any area which is predominantly open and which, because of obsolete platting, diversity of ownership, deterioration of structures or improvements, or otherwise, results in economic underdevelopment of the area or substantially impairs or arrests the sound growth of a municipality. See Idaho Code § 50-2903(8)(c); and

WHEREAS, Idaho Code §§ 50-2018(9), 50-2903(8) and 50-2008(d) list additional conditions applicable to open land areas, including open land areas to be acquired by the Agency; and

WHEREAS, the Report addresses the necessary findings concerning including open land within any urban renewal area as defined in Idaho Code Sections 50-2018(9), 50-2903(8)(c), and 50-2008(d); and

WHEREAS, under the Law and Act, Idaho Code Sections 50-2903(8)(f) and 50-2018(8) and (9), the definition of a deteriorating area shall not apply to any agricultural operation as defined in Idaho Code Section 22-4502(2), absent the consent of the owner of the agricultural operation except for an agricultural operation that has not been used for three (3) consecutive years; and

WHEREAS, the Report does not include parcels subject to such consent; and

WHEREAS, the Report includes a preliminary analysis concluding the base assessment roll value for the Study Area along with the base assessment roll value for the existing Project Areas do not exceed ten percent (10%) of the current assessed valuation of all taxable property within the City; and

WHEREAS, pursuant to Idaho Code Section 50-2008, an urban renewal project may not be planned or initiated unless the local governing body has, by resolution, determined such area to be a deteriorated area or deteriorating area, or combination thereof, and designated such area as appropriate for an urban renewal project; and

WHEREAS, Idaho Code Section 50-2906, also requires that in order to adopt an urban renewal plan containing a revenue allocation financing provision, the local governing body must make a finding or determination that the area included in such plan is a deteriorated area or deteriorating area; and

WHEREAS, it is desirable and in the best interest that the Agency prepare an urban renewal plan for the area identified as Pancheri East Bank Area in the Report located in the City of Idaho Falls, County of Bonneville, State of Idaho.

NOW, THEREFORE, BE IT RESOLVED BY THE MAYOR AND COUNCIL OF THE CITY OF IDAHO FALLS, AS FOLLOWS:

1. That the Council finds and declares that the above statements are true and correct.

2. That the Pancheri East Bank Area described in the Report is a deteriorated or deteriorating area existing in Idaho Falls as defined by Chapters 20 and 29, Title 50, Idaho Code, as amended.

3. That the Agency commence preparation of an Urban Renewal Plan for consideration by the Agency Board and, if acceptable, final consideration by the Council in compliance with Chapters 20 and 29, Title 50, Idaho Code, as amended.

4. That this Resolution shall be in full force and effect immediately upon its adoption and approval.

ADOPTED and effective this _____ day of _____, 2022

ATTEST: CITY OF IDAHO FALLS, IDAHO

_____ _____

KATHY HAMPTON, CITY CLERK REBECCA L. NOAH CASPER, Ph.D., MAYOR

(SEAL)

STATE OF IDAHO)
) ss:
County of Bonneville)

I, KATHY HAMPTON, CITY CLERK OF THE CITY OF IDAHO FALLS, IDAHO, DO HEREBY CERTIFY:

That the above and foregoing is a full, true and correct copy of the Resolution entitled, "A RESOLUTION OF THE CITY OF IDAHO FALLS, IDAHO, A MUNICIPAL CORPORATION OF THE STATE OF IDAHO, DETERMINING A CERTAIN AREA WITHIN THE CITY TO BE DETERIORATED OR DETERIORATING AREA AS DEFINED BY IDAHO CODE SECTIONS 50-2018(9) AND 50-2903(8); DIRECTING THE URBAN RENEWAL AGENCY OF IDAHO FALLS TO COMMENCE THE PREPARATION OF AN URBAN RENEWAL PLAN SUBJECT TO CERTAIN CONDITIONS, WHICH PLAN MAY INCLUDE REVENUE ALLOCATION PROVISIONS FOR ALL OR PART OF THE AREA; PROVIDING SEVERABILITY, CODIFICATION, PUBLICATION BY SUMMARY, AND ESTABLISHING EFFECTIVE DATE."

_____
Kathy Hampton, City Clerk

(SEAL)

Memorandum

File #: 21-397 **City Council Meeting**

FROM: Brad Cramer, Director
DATE: Monday, January 31, 2022
DEPARTMENT: Community Development Services

Subject
Ordinance to change the name of Serenity Lane to Charity Lane.

Council Action Desired
☒ Ordinance ☐ Resolution ☐ Public Hearing

☐ Other Action (Approval, Authorization, Ratification, etc.)

To approve the Ordinance changing the name of Serenity Lane to Charity Lane under a suspension of the rules requiring three complete and separate readings and request that it be read by title and published by summary (or consider the Ordinance on the first reading and that it be read by title, reject the Ordinance, or take other action deemed appropriate).

Description, Background Information & Purpose
Attached is an ordinance changing the street name of Serenity Lane to Charity Lane. This change is requested following a notice received that the street was similar to an existing street in Bonneville County after the plat for subdivision had already been recorded. There are no buildings on Serenity Lane so no property owners are affected by the change.

Alignment with City & Department Planning Objectives

☐ ☒ ☐ ☐ ☐ ☐ ☐ ☒

The proposed ordinance is consistent with principles of Good Governance and Transportation.

Interdepartmental Coordination
CDS has worked with the GIS division City Attorney's office on the drafting of the ordinance.

Fiscal Impact
NA

Legal Review

Legal has reviewed the attached ordinance.

ORDINANCE NO. _____

AN ORDINANCE CHANGING THE NAME OF SERENITY LANE TO CHARITY LANE; PROVIDING SEVERABILITY, CODIFICATION, PUBLICATION BY SUMMARY, AND ESTABLISHING AN EFFECTIVE DATE WHEN THIS ORDINANCE SHALL BECOME EFFECTIVE.

WHEREAS, the City of Idaho Falls desires to maintain an efficient and logical roadway system; and

WHEREAS, certain street name within the City has duplicate naming as county name and the Citywishes to correct such errors; and

WHEREAS, the Council conducted a duly noticed public meeting and passed a motion to approve the name changes on February 24, 2022.

NOW, THEREFORE, BE IT ORDAINED BY THE MAYOR AND CITY COUNCIL OF THE CITY OF IDAHO FALLS, IDAHO:

Section 1. That Serenity Lane is changed to Charity Lane.

Section 2. Savings and Severability Clause. The provisions and parts of this Ordinance are intended to be severable. If any section, sentence, clause or phrase of this Ordinance should be held to be invalidor unconstitutional by a court of competent jurisdiction, such invalidity or unconstitutionality shall not affect the validity or constitutionality of any other section, sentence, clause or phrase of this Ordinance.

Section 3. Codification Clause. The City Clerk is instructed to immediately forward this Ordinance to the codifier of the official municipal code for proper revision of the Code.

Section 4. Publication. This Ordinance, or a summary thereof in compliance with Idaho Code, shall be published once in the official newspaper of the City, and shall take effect immediately upon its passage, approval, and publication.

Section 5. Effective Date. This Ordinance shall become effective upon its passage, execution, and publication in the manner provided by law.

PASSED BY THE COUNCIL AND APPROVED BY THE MAYOR THIS_____DAY OF _____, 20___.

_____
Rebecca L. Noah Casper
Mayor

ATTEST:

_____
Kathy Hampton
City Clerk

(SEAL)

STATE OF IDAHO)
) ss:
County of Bonneville)

I KATHY HAMPTON, CITY CLERK OF THE CITY OF IDAHO FALLS, IDAHO, DO HEREBY CERTIFY:

That the above and foregoing is a full, true and correct copy of the Ordinance entitled, "AN ORDINANCE CHANGING THE NAME OF SERENITY LANE TO CHARITY LANE; PROVIDING SEVERABILITY, CODIFICATION, PUBLICATION BY SUMMARY, AND ESTABLISHING AN EFFECTIVE DATE WHEN THIS ORDINANCE SHALL BECOME EFFECTIVE."

_____
Kathy Hampton
City Clerk

(SEAL)

Memorandum

File #: 21-392 **City Council Meeting**

FROM: Brad Cramer, Director
DATE: Monday, January 31, 2022
DEPARTMENT: Community Development Services

Subject
Public Hearing-Part 1 of 2 of the Annexation and Initial Zoning-Annexation Ordinance and Reasoned Statement of Relevant Criteria and Standards for 55.033 acres, Northwest ¼ of Section 29, Township 2 North, Range 38 East.

Council Action Desired
☒ Ordinance ☐ Resolution ☒ Public Hearing

☐ Other Action (Approval, Authorization, Ratification, etc.)

1. Approve the Ordinance annexing 55.033 acres, Northwest ¼ of Section 29, Township 2 North, Range 38 East under a suspension of the rules requiring three complete and separate readings and request that it be read by title and published by summary (or consider the Ordinance on the first reading and that it be read by title, reject the Ordinance, or take other action deemed appropriate).

2. Approve the Reasoned Statement of Relevant Criteria and Standards for the annexation of 55.033 acres, Northwest ¼ of Section 29, Township 2 North, Range 38 East and give authorization for the Mayor to execute the necessary documents (or take other action deemed appropriate).

Description, Background Information & Purpose
Attached is part 1 of 2 of the application for Annexation and Initial Zoning of LC, Limited Commercial and R2, Mixed Residential which includes the Annexation Ordinance and Reasoned Statement of Relevant Criteria and Standards for 55.033 acres, Northwest ¼ of Section 29, Township 2 North, Range 38 East. The Planning and Zoning Commission considered this item at its November 9, 2021, meeting and recommended approval by a unanimous vote. Staff concurs with this recommendation.

Alignment with City & Department Planning Objectives

☐ ☒ ☒ ☐ ☒ ☐ ☐ ☐

Consideration of annexation must be consistent with the principles of the Comprehensive Plan which includes many

policies and goals related to Good Governance, Growth, Sustainability, and Livable Communities.

Interdepartmental Coordination
The annexation legal description has been reviewed by the Survey Division.

Fiscal Impact
NA

Legal Review
This application and ordinance have been reviewed by Legal pursuant to applicable law.

Annexation and Initial Zoning

ANNX21-016 Annex and Initial Zoning - LC, R2, R1 - Property behind Home Depot

Legend

- ANNX21-016
- City Limit

Overlays

- PT
- PT&T-1
- PUD
- T-1
- T-2

Zoning

- RE
- RP
- R1
- R2
- TN
- RMH
- R3
- R3A
- PB
- CC
- LC
- HC
- R&D
- LM
- I&M
- P

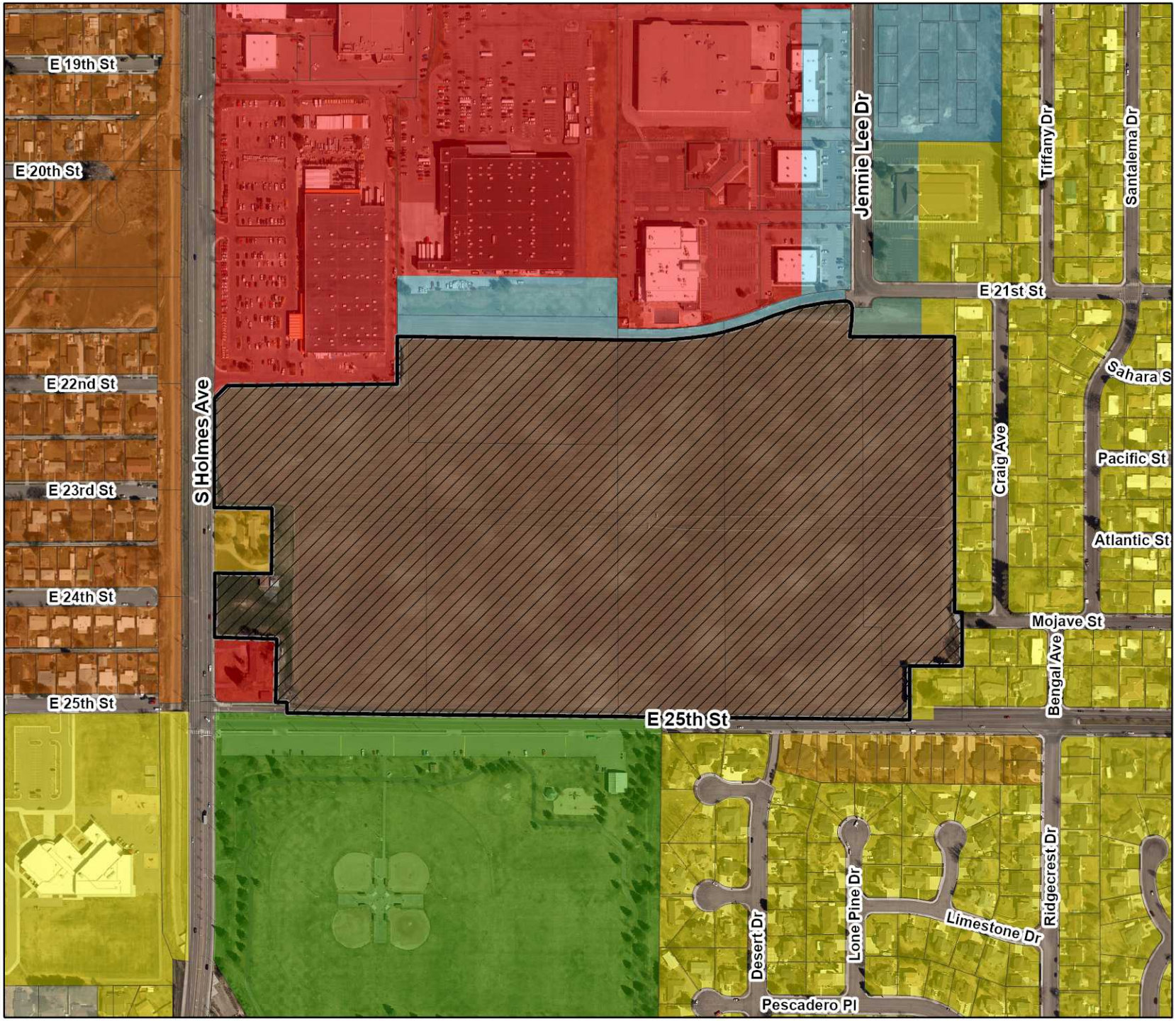

IDAHO FALLS

Planning Division
City Annex Building
680 Park Ave.
Idaho Falls, ID 83402
(208) 612-8276

N

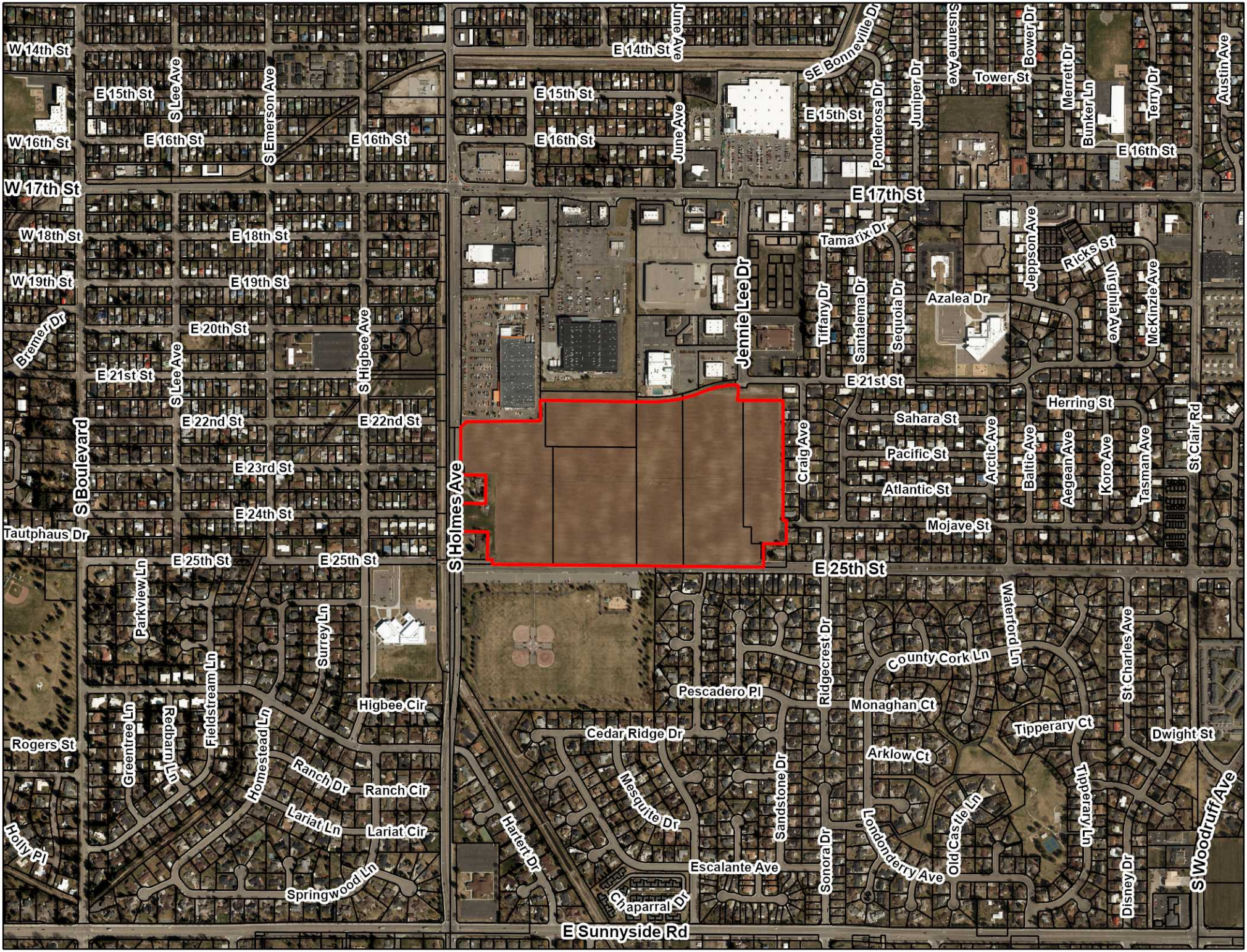
W 14th St
E 14th St
June Ave
SE Bonneville Dr
Susanne Ave
Bower Dr
Merrett Dr
Austin Ave
E 15th St
S Lee Ave
S Emerson Ave
Tower St
Bunker Ln
Terry Dr
W 16th St
E 16th St
Ponderosa Dr
Juniper Dr
W 17th St
E 17th St
W 18th St
E 18th St
Tamarix Dr
Jeppson Ave
Ricks St
W 19th St
E 19th St
Jennie Lee Dr
Tiffany Dr
Santalema Dr
Sequoia Dr
Azalea Dr
Virginia Ave
McKinzie Ave
Bremer Dr
E 20th St
S Higbee Ave
E 21st St
Herring St
E 22nd St
Sahara St
Craig Ave
Arctic Ave
Baltic Ave
Aegean Ave
Koro Ave
Tasman Ave
St Clair Rd
S Boulevard
E 23rd St
Pacific St
Atlantic St
S Holmes Ave
E 24th St
Mojave St
Tautphaus Dr
E 25th St
Parkview Ln
Surrey Ln
Waterford Ln
St Charles Ave
Ridgecrest Dr
County Cork Ln
Fieldstream Ln
Pescadero Pl
Higbee Cir
Monaghan Ct
Redbarn Ln
Greentree Ln
Cedar Ridge Dr
Tipperary Ct
Dwight St
Rogers St
Homestead Ln
Arklow Ct
Ranch Dr
Ranch Cir
Mesquite Dr
Sandstone Dr
Tipperary Ln
Lariat Ln
Lariat Cir
Hartert Dr
Londonderry Ave
Old Castle Ln
S Woodruff Ave
Holly Pl
Escalante Ave
Sonora Dr
Disney Dr
Springwood Ln
Chaparral Dr
E Sunnyside Rd

Annexation and Initial Zoning

ANNX21-016 Annex and Initial Zoning - LC, R2, R1 - Property behind Home Depot

- Estate
- Low Density
- Higher Density
- Greenbelt Mixed Uses
- Parks and Recreation
- Public Facilities and Open Spaces
- Commercial
- Employment Centers
- Medical Services Centers
- Higher Education Centers
- Planned Transition
- Highway-related industrial
- Railroad-related industrial

Comprehensive Plan

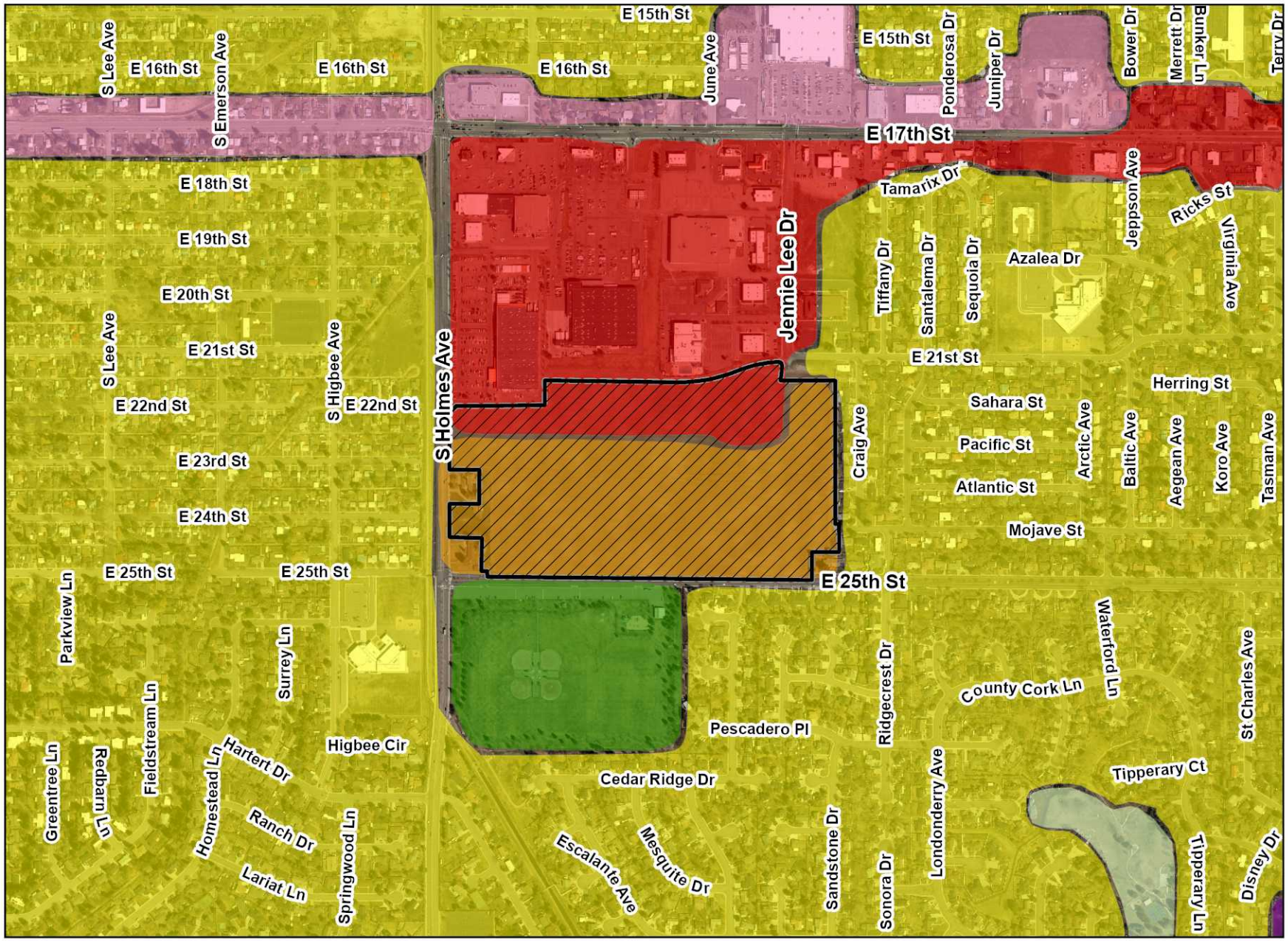

IDAHO FALLS

Planning Division
City Annex Building
680 Park Ave.
Idaho Falls, ID 83402
(208) 612-8276

N

STAFF REPORT

Annexation and Initial Zoning of LC, Limited Commercial and R2, Mixed Residential

Approx. 55.033 acres in the NW ¼ of Section 29, T2N, R38E

February 10, 2022

IDAHO FALLS

Community Development Services

Applicant: Horrocks Engineers

Project Manager: Naysha Foster

Location: Generally, north of E 25th St, east of S Holmes Ave, south of E 17th St, west of Craig St.

Size: Approximately 55.033 acres

Zoning:
Existing: County R-2
North: LC, R3A & PB
South: P, R1 & R2
East: R1
West: LC, R2, & TN

Proposed Zoning: LC, R2

Existing Land Uses:
Site: Ag
North: Commercial
South: Park & Residential
East: Residential
West: Residential

Future Land Use Map: Commercial and Higher Density

Attachments:
1. Comprehensive Plan Policies
2. Zoning Information
3. Maps & Aerial Photos

Requested Action: To approve of annexation and initial zoning of LC, Limited Commercial and R2, Mixed Residential to the Mayor and City Council.

Staff Comments: The property is located southeast from Home Depot, along S Holmes and E 25th. Holmes is a principal arterial and E 25th is a Collector. The property is currently farmed. The property will need to be platted before development occurs. Water, sewer, and power are easily accessible from various locations. Utilities are in S Holmes, E 25th, Jenny Lee and Mojave St. There is also two water lines stubbed to the north portion of the property. One is located on the west side of Apple Athletic Club and the other is on the east side of Apple Athletic Club.

Annexation: This is a Category "A" annexation as it is requested by the property owner. The property is within the Area of City Impact and is surrounded by City limits. Annexation of the property is consistent with the policies of the City's Comprehensive Plan. The proposed zoning is also compatible with the surrounding zoning and existing land uses.

Initial Zoning: The proposed zoning is LC on the majority of the west side of the property with R2 on the east of Jennie Lee Dr as extended. The LC is a commercial zone that allows smaller scale retail and other services which supply the daily needs of residents. This zone is usually located on major streets contiguous to residential uses making it easily accessible for pedestrian to walk or use non-motorized vehicles. The LC Zone also allows a wide variety dwelling types under the R3A requirements, allowing up to 35 units per net acre.
The R2 is a mixed residential use allowing up to 4 attached units per structure. R2 is a medium density zone allowing 17 units per net acre. This zone is also located near commercial services.

Staff Recommendation: Staff and the Planning and Zoning Commission recommend approval of the annexation and initial zoning of LC and R2 as it is consistent with the policies of the Comprehensive Plan.

Comprehensive Plan Policies:
Residential development should reflect the economic and social diversity of Idaho Falls. (p. 38)
Reduce land use conflicts, existing land uses are recognized as starting points for future development patterns. (p. 66)
Encourage development in areas served by public utilities or where extensions of facilities are least costly. (p. 67)

Zoning Ordinance:

11-3-5 PURPOSE OF COMMERCIAL ZONES
LC Limited Commercial Zone. This zone provides a commercial zone for retail and service uses which supply the daily household needs of the City's residents. This Zone is usually located on major streets contiguous to residential uses. This zone is characterized by smaller scale commercial uses which are easily accessible by pedestrians and non-motorized vehicles from the surrounding residential neighborhoods, although larger scale developments such as big-box stores may still serve as anchors. Connectivity is provided with walkways that provide access to and through the development site. Parking for vehicles is understated by the use of landscaping, location, and provision of pedestrian walkways to the businesses.

11-3-3: PURPOSE OF RESIDENTIAL ZONES

R3A Residential Mixed Use Zone. To provide for a mix of uses in which the primary use of the land is for residential purposes, but in which office buildings and certain other uses of a semi-commercial nature may be located. Characteristic of this Zone is a greater amount of automobile traffic, greater density, and a wider variety of dwelling types and uses than is characteristic of the R3 Residential Zone. While office buildings and certain other uses of a semi-commercial nature may be located in the Zone, the R3A Zone is essentially residential in character. Therefore, all uses must be developed and maintained in harmony with residential uses. This zone should be located along major streets such as arterials and collectors.

R2 Mixed Residential Zone. This zone provides a residential zone characterized by smaller lots and dwellings, more compact and denser residential development; and higher volumes of vehicular and pedestrian traffic than are characteristic of the RE, RP and R1 Zones. The principal uses permitted in the R2 Zone shall be one (1), two (2), three (3), and four (4) dwelling units. This zone is also generally located near limited commercial services that provide daily household needs.

11-2-3: ALLOWED USES IN RESIDENTIAL ZONES.

Table 11-2-1: Allowed Uses in Residential Zones

P = permitted use. C1 = administrative conditional use. C2 = Planning Commission conditional use. C3 = City Council conditional use. A blank denotes a use that is not allowed in that zone.

*Indicates uses that are subject to specific land use provisions set forth in the Standards for Allowed Land Uses Section of this Chapter.

	Low Density Residential			Medium Density Residential			High Density Residential	
Proposed Land Use Classification	**RE**	**RP**	**R1**	**R2**	**TN**	**RMH**	**R3**	**R3A**
Accessory Use	P	P	P	P	P	P	P	P
Agriculture*	P							
Animal Care Clinic					P*			P
Artist Studio					P*			
Bed and Breakfast*								P
Boarding /Rooming House							P	P
Day Care, Center*			C_2	P	P		P	P
Day Care, Group*	C_1		C_1	P	P	C_1	P	P
Day Care, Home	C_1		C_1	P	P	C_1	P	P
Dwelling, Accessory Unit*	P			P	P		P	P
Dwelling, Multi-Unit*				P*	P		P	P
Dwelling, Multi-Unit Attached*				P	P		P	P
Dwelling, Single Unit Attached*			P	P	P	P	P	P
Dwelling, Single Unit Detached	P	P	P	P	P	P	P	P
Dwelling, Two Unit				P	P		P	P
Eating Establishment, Limited					P*			P
Financial Institutions					P*			P
Food Processing, Small Scale					P*			
Food Store					P*			
Fuel Station					P*			
Health Care and Social Services					P*			P
Home Occupation*	C_1		C_1	C_1	C_1	C_1	C_1	C_1
Information Technology								P
Laundry and Dry Cleaning					P*			P
Live-Work*					C_1			P
Manufactured Home*	P	P	P	P	P	P	P	P
Mobile Home Park*						C_2		C_2
Mortuary								P
Park and Recreation Facility*	P	P	P	P	P	P	P	P
Parking Facility								P
Personal Service					P*			P
Planned Unit Development*	C_3	C_3	C_3	C_3		C_3	C_3	C_3
Professional Service								P
Public Service Facility*	C_2	C_2	C_2	C_2	C_2	C_2	C_2	C_2
Public Service Facility, Limited	P	P	P	P	P	P	P	P
Public Service Use								P

Recreational Vehicle Park*						C_2		
Proposed Land Use Classification	**RE**	**RP**	**R1**	**R2**	**TN**	**RMH**	**R3**	**R3A**
Religious Institution*	C_2	C_2	C_2	C_2	C_2	C_2	C_2	C_2
Residential Care Facility							P	P
Retail					P*			C_2
School	C_2	C_2	C_2	C_2	C_2	C_2	C_2	C_2
Short Term Rental*	P	P	P	P	P	P	P	P
Transite Station								P

(Ord. 3218, 9-13-18) (Ord. 3358, 12-10-20)

11-2-4: ALLOWED USES IN COMMERCIAL ZONES.

Table 11-2-2: Allowed Uses in Commercial Zones

P = permitted use. C1 = administrative conditional use. C2 = Planning Commission conditional use. C3 = City Council conditional use. A blank denotes a use that is not allowed in that zone.

*Indicates uses that are subject to specific land use provisions set forth in the Standards for Allowed Land Uses Section of this Chapter.

	Commercial				
Proposed Land Use Classification	**PB**	**CC**	**LC**	**HC**	**PT**
Accessory Use*	P	P	P	P	P
Accessory Use, Fuel Station*		P	P	P	
Accessory Use, Storage Yard*		P	P	P	
Amusement Center, Indoor		P	P	P	
Amusement Center, Indoor Shooting Range*		P	P	P	
Amusement Center, Outdoor*				P	
Animal Care Clinic*	P	P	P	P	
Animal Care Facility*				P	
Bed and Breakfast*		P	P		P
Boarding /Rooming House		P	P		P
Building Material, Garden and Farm Supplies			P	P	
Cemetery*		C_2	C_2	C_2	
Club*		P	P	P	
Communication Facility		P	P	P	
Day Care, all Types*	P	P	P	P	P
Drinking Establishment		P		P	
Drive-through Establishment *	P*	P	P	P	P
Dwelling, Accessory Unit *		P	P	P	P
Dwelling, Multi-Unit*		P	P		P
Dwelling, Multi-Unit Attached*		P	P		P
Dwelling, Single Unit Atached*			P		
Dwelling, Single Unit Detached			P		
Dwelling, Two Unit			P		P
Eating Establishment		P	P	P	P
Eating Establishment, Limited	P	P	P	P	P

Proposed Land Use Classification	RE	RP	R1	R2	TN	RMH	R3	R3A
Religious Institution*	C_2	C_2	C_2	C_2	C_2	C_2	C_2	C_2
Residential Care Facility							P	P
Retail					P*			C_2
School	C_2	C_2	C_2	C_2	C_2	C_2	C_2	C_2
Short Term Rental*	P	P	P	P	P	P	P	P
Transite Station								P

(Ord. 3218, 9-13-18)

11-2-4: ALLOWED USES IN COMMERCIAL ZONES.

Table 11-2-2: Allowed Uses in Commercial Zones

P = permitted use. C1 = administrative conditional use. C2 = Planning Commission conditional use. C3 = City Council conditional use. A blank denotes a use that is not allowed in that zone.

*Indicates uses that are subject to specific land use provisions set forth in the Standards for Allowed Land Uses Section of this Chapter.

	Commercial				
Proposed Land Use Classification	PB	CC	LC	HC	PT
Accessory Use*	P	P	P	P	P
Accessory Use, Fuel Station*		P	P	P	
Accessory Use, Storage Yard*		P	P	P	
Amusement Center, Indoor		P	P	P	
Amusement Center, Indoor Shooting Range*		P	P	P	
Amusement Center, Outdoor*				P	
Animal Care Clinic*	P	P	P	P	
Animal Care Facility*				P	
Bed and Breakfast*		P	P		P
Boarding /Rooming House		P	P		P
Building Material, Garden and Farm Supplies			P	P	
Cemetery*		C_2	C_2	C_2	
Club*		P	P	P	
Communication Facility		P	P	P	
Day Care, all Types*	P	P	P	P	P
Drinking Establishment		P		P	
Drive-through Establishment *	P*	P	P	P	P
Dwelling, Accessory Unit *		P	P	P	P
Dwelling, Multi-Unit*		P	P		P
Dwelling, Single Unit Atached*			P		
Dwelling, Single Unit Detached			P		
Dwelling, Two Unit			P		P
Eating Establishment		P	P	P	P
Eating Establishment, Limited	P	P	P	P	P
Financial Institutions	P	P	P	P	P
Entertainment and Cultural Facilities	P	P	P	P	P

Proposed Land Use Classification	PB	CC	LC	HC	PT
Equipment Sales, Rental and Services			P	P	
Food Processing, Small Scale				P	
Food Store		P	P	P	P
Health Care and Social Services	P	P	P	P	P
Higher Education Center		P	P	P	P
Home Occupation*	P	P	P	P	P
Hospital*	C_2	C_2	C_2	C_2	C_2
Industry, Craftsman	P	P	P	P	
Industry, Light		P		P	
Information Technology	P	P	P	P	P
Laundry and Dry Cleaning		P			P
Live-Work*	C_2	P	P	P	P
Lodging Facility		P	P	P	P
Mortuary				P	P
Parking Facility		P	P	P	P
Pawn Shop		P			
Personal Service	P	P	P	P	P
Professional Service	P	P	P	P	P
Planned Unit Development*		C_3	C_3		C_3
Public Service Facility*	C_2	C_2	C_2	C_2	C_2
Public Service Facility, Limited	P	P	P	P	P
Public Service Use	P	P	P	P	P
Recreation Vehicle Park*				P	
Religious Institution*		P	P	P	P
Residential Care Facility	P	P	P	P	P
Retail		P	P	P	P
School		P	P	P	P
Short Term Rental*		P	P		P
Fuel Station		P	P	P	
Fuel Station, Super		C_2	P	P	
Storage Facility, Indoor		P	P	P	P
Storage Facility, Outdoor				P	
Storage Yard*				P	
Transit Station		P	P	P	P
Vehicle and Equipment Sales			P	P	
Vehicle Body Shop				P	
Vehicle Repair and Service		P	P	P	
Vehicle Sales, Rental and Service		P		P	
Vehicle Washing Facility		C_2	C_2	P	

(Ord. 3210, 8-23-18) (Ord. 3218, 9-13-18) (Ord. 3233, 12-20-18) (Ord 3277, 10-10-19)

11-2-5: ALLOWED USES IN INDUSTRIAL AND SPECIAL PURPOSE ZONES.

Table 11-2-3: Allowed Uses in Industrial Zones

P = permitted use. C1 = administrative conditional use. C2 = Planning Commission conditional use. C3 = City Council conditional use. A blank denotes a use that is not allowed in that zone.

*Indicates uses that are subject to specific land use provisions set forth in the Standards for Allowed Land Uses Section of this Chapter.

	Industrial		Special Purpose	
Proposed Land Use Classification	**LM**	**I&M**	**R&D**	**P**
Accessory Use*	P	P	P	
Accessory Use, Fuel Station*	P	P	P	
Accessory Use, Storage Yard*	P	P	P	
Airport	P			
Agriculture*	C_2	P		C_2
Agriculture Tourism	C_2	P		C_2
Amusement Center	P	P		
Amusement Center, Indoor Shooting Range*	P	P		
Amusement Center, Outdoor*	P	P		C_2
Adult Business*		P		
Animal Care Clinic*	P	P		
Animal Care Facility*	P	P		
Artist Studio	P	P		
Auction, Livestock		C_2		
Building Contractor Shop	P	P		
Building Material, Garden and Equipment	P	P		
Cemetery*				C_2
Club*	P	P		
Communication Facility	P	P	P	
Correctional Facility or Jail	C_2	P		
Day Care*	P	P	P	
Drinking Establishment	P	P		
Drive-through Establishment*	P	P		
Dwelling, Accessory Unit*	P	P		
Eating Establishment	P	P		
Eating Establishment, Limited	P	P	P	
Equipment Assembly and Sales	P	P		
Financial Institution	P	P	P	
Food Processing, Small Scale Processing With or Without Sales	P	P		
Food Products, Processing, With or Without Retail Sales		P		
Food Store	P	P		
Fuel Station, Super	P	P		

Proposed Land Use Classification	LM	I&M	R&D	P
Health Care and Social Services			P	
Higher Education Facilities	P		P	
Hospital*	C_2	C_2	C_2	
Industry, Craftsman	P	P		
Industry, Heavy		P		
Industry, Light	P	P		
Information Technology	P	P	P	
Laundry and Dry Cleaning	P	P		
Lodging Facility	P		C_2	
Medical Support Facilities	P		P	
Parking Facility	P	P	P	
Park and Recreation Facility*				P
Pawn Shop	P	P		
Personnel Service	P	P		
Professional Service	P	P	P	
Public Service Facility*	P	P	C_2	C_2
Public Service Facility, Limited	P	P	P	P
Public Service Use	P	P	P	P
Railroad Freight Terminal and Station		P		
Recreational Vehicle Park*				C_2
Research and Development Business	P	P	P	
Retail	P	P		
Storage Facility, Indoor	P	P		
Storage Facility, Outdoor	P	P		
Storage Yard*	P	P		
Terminal Yard, Trucking and Bus		P		
Transit Station	P	P	P	
Vehicle and Equipment Sales	P	P		
Vehicle Body Shop	P	P		
Vehicle Sales	P	P		
Vehicle Washing Facility	P	P		
Warehouse	P	P		
Warehouse, Wholesale With Flammable Materials	P	P		

(Ord. 3218, 9-13-18) (Ord. 3233, 12-20-18)

November 9, 2021 7:00 p.m. Planning Department

City Annex Building

MEMBERS PRESENT: Commissioners Brent Dixon, Natalie Black, Joanne Denney, Gene Hicks, Margaret Wimborne, Lindsey Romankiw, George Morrison

MEMBERS ABSENT: Arnold Cantu.

ALSO PRESENT: Planning Director Brad Cramer, Assistant Planning Director Kerry Beutler, and planners Naysha Foster and Caitlin Long, and interested citizens.

CALL TO ORDER: Brent Dixon called the meeting to order at 7:00 p.m.

CHANGES TO AGENDA: None.

MINUTES: Black moved to approve the Minutes from October 5, 2021, Hicks seconded the motion and it passed unanimously.

Hicks moved to approve the Minutes from October 19, 2021, Denney seconded the motion and it passed unanimously.

Public Hearing (s):

2. ANNX 21-016: ANNEXTION/INITIZL ZONING. Annexation of 55.01 acres with initial zoning of LC and R2.

Dixon opened the public hearing.

Applicant: Clint Boyle, 2194 Snake River Parkway, Idaho Falls, Idaho. Boyle described this property as just south of Home Depot and north of Community Park. The property is vacant farmland that is completely encompassed by City. Boyle stated that this property is a central area of town with commercial retail to the north and single family residential to the east, southeast, and west and Community Park to the south. Boyle stated that this property on the Comprehensive Plan is shown as a mix of commercial and higher density residential and the application is exactly in compliance with the Comprehensive Plan with the proposal for commercial on the property with the addition of higher density residential. Boyle stated that this property is surrounded by good transportation network with Holmes and 25th Street. The property when developed will extend Jenni Lee to 25th, which should alleviate the traffic going through the neighborhood on Craig and instead go straight down Jenni Lee to 25th. Boyle showed that east of Jenni Lee is the proposal for R2 to provide the transition buffer from the activities that would be more intense along Holmes, to a less intense development with the R2 allowing up to 4 units attached. Boyle stated that the remainder of the property is proposed as LC is a neighborhood zone that allows the flexibility of commercial with higher density residential and this is intended to be a mixed-use project with a commercial component and higher density elements that will lend itself to the walkability of the area. Boyle stated that Jenni Lee will be the dividing line to the less intense R2. Boyle stated that this property is completely surrounded by City infrastructure, including sewer, water, roadways, pathways. Boyle stated that this is a last major infill component in the City that has been sitting for many years.

Wimborne asked about the R1 component that was requested. Boyle deferred to staff. Boyle stated that the R1 is not part of their request, but it was one that they were willing to facilitate.

Dixon asked if Mojave would go through the development. Boyle stated they will be back in front of the commission with the Preliminary Plat that will have the roadways. Boyle confirmed that Jenni Lee will extend through the site and Mojave will connect to Jennie Lee, and 25th Street will be widened to full City street width and standards.

Black asked if they held a neighborhood meeting. Boyle stated that the Wasatch Group is the development group that held a neighborhood meeting and deferred information on the meeting to the developer. Dixon asked who all was included in the neighborhood meeting. Black asked how many people were at the meeting.

Developer: Bracken Atkinson, Wasatch Development Group, 595 S. Riverwood, Logan, UT. Atkinson indicated that they did have a neighborhood meeting a couple of weeks ago and they tried to reach out to a 300-yard radius and sent flyers to people to put on Facebook, as well as sent information to a City Council member for additional inclusion. Atkinson stated that they talked to Apple Fitness and asked them to invite neighbors. Atkinson stated that they responded to emails and inquiries from the week and asked people to share. Atkinson stated that they had 25-30 people at the meeting and had 90 minutes of question and answer. Atkinson has received several emails since that time and have tried to be open to the public.

Dixon stated that they have several letters that have been received by staff and Commissioners have copies.

Foster presented the staff report, a part of the record. Foster also cleared up the R1 request, by stating that there is a small strip of property south of Mojave that belongs to an adjacent property, and it is a separate parcel that is 5' wide x 15' long and is still County property. Staff reached out to the property owner and asked if they would like to be included in the application process to have that property annexed and zoned R1, and the property owner agreed, and staff asked for an affidavit of legal interest, but the property owner failed to bring that affidavit in, so that property cannot be part of the consideration tonight.

Hicks confirmed and Foster agreed that except the small sliver of land on the east everything else in this area would be annexed into the City limits. Hicks asked if the missing sliver could be resolved. Foster agreed to work on it between now and City Council, but the recommendation wouldn't include the R1 portion. Dixon indicated that it would need a hearing with Planning Commission before it goes to City Council.

Support/Opposition:

Matt Voigt, 2550 Desert Drive, Idaho Falls, Idaho. Voigt wanted to comment regarding 25th Street and asked them to look at the spirit of 25th Street as it is designed easterly towards the mall and it has single family that carries cohesively towards Channing, the to multi-family, and on to commercial. Voigt stated that the alignment of any multifamily along the rear yards of adjacent homes in Jenni Lee would be a distraction of that design. Voigt asked them to keep in consideration the median that is fully in place down the roadway. Voigt stated that the intersection of Jenni Lee coming to rear yards or front yards of adjacent R1 properties doesn't exist any where else on 25th. Voigt stated that he would like to know if there will be additional lanes provided on 25th for ingress and egress from the development, how many access points will be allowed onto 25th and has a traffic study been done for the traffic going to 25th, and what type of relief will Holmes take from the development. Voigt stated that the important part is to

protect the R1 that is along 25th currently, and asked for recommendations to include that the developer model 25th as a minimum to what is currently in place in the easterly transition of 25th towards Channing Way, including not mixing R1 and R2 properties on either side of the street, no intersections that are one way intersections into a front or a rear yard of a R1 property, and the medians that provide privacy from traffic.

Harry Forsberg, 2670 Cedar Ridge, Idaho Falls, Idaho. Forsberg wished that they would have extended past 300 meters for comment, because this is a major area, and feels that it should include the areas from Cedar Ridge, and the other developments. Forsberg is concerned with the traffic, and feels 17th & Holmes, 17th and Woodruff has traffic that exceeds its ability to handle the traffic, and the high-density housing in this development as well as high density on Jenni Lee will impact those roads. Forsberg doesn't know if any thought has been taken into improving the traffic flow. Forsberg stated that Community Park holds large tournaments and the parking in the Park is not sufficient, so cars line up and down 25th for Tournaments and that parking needs to be addressed. Forsberg feels that the development here would be ahead of the infrastructure, and he doesn't feel that the area is buoyed up enough to handle this amount of high-density housing. Forsberg assumed that the high-density housing would give a greater profit to the developer versus the business type development. Forsberg doesn't feel that high density housing will fit well with what is currently in the neighborhood.

Dixon asked staff if a traffic study would be required. Foster indicated that anything over 250 units would require a traffic study. Beutler added that anything that will generate more than 200 trips at a peak period would require a traffic study and that would come at the platting phase and not the annexation phase.

Martin McLellan, 2762 Galloway Court, Idaho Falls, Idaho (Shamrock Park). McLellan agrees with the previous speakers with the traffic issues, the ingress and egress. McLellan stated that he is concerned that the area doesn't have the schools to support the children this type of project would bring. McLellan stated that it needs to be considered that they cannot take care of the current school needs, and cannot get a bond passed, and additional families will add more stress to the educational system.

Graham Whipple, 1206 Mojave, Idaho Falls, Idaho. Whipple is an architect in town. Whipple is not opposed to the annexation. Whipple stated that the parcel was introduced as a neighbor to Home Depot and Apple Athletic Club, but before those existed there were neighborhoods and people that built home 60+ years ago and still live in the original homes who invested in a context within a growing City that they knew would be where they would raise their families. Whipple stated that since they built homes there have been more neighborhoods, Home Depot, Walmart (disaster area). Whipple believes that at one point there were intentions to continue the residential across Jennie Lee. Whipple stated that architectures are asked to give a guestimate of the potential of neighborhoods and looking at this area and using the R3A density standards on one side, and R2 on the other side, the west side of the road could potentially have at least 150 – 225 high density units and an additional 75 on the east side of Jennie Lee. Whipple stated that they are potentially adding more households in 1/3 of the proposed rezone than exist in the entire northern half of the square mile, and that will create a lot of traffic. Whipple stated that this is the earlies east west bike path and the connectivity in Idaho Falls has been key and focused, but this summer people were parking and blocking the bike path, and cars were ticketed, and signs were changed to allow parking in some places, but it still

blocked the bike path. Whipple stated that the character of 25th from Holmes to Channing has been addressed. Whipple stated that if LC is approved on 4/5 of this site, it won't be only 225 – 300 potential homes, but if they put high density on all of the property there could be 1000 households. Whipple asked where the limits of the LC zone are, and what is appropriate. Whipple stated that a high-density zone is required to dump onto a collector street, so it would suggest that all the traffic will dump onto 25t, and he is unsure if 25th is capable of handing that traffic. Whipple stated that there are individuals along Craig that say Drive Like Your Own Kids Live here, and traffic is a problem, and this will add significant impact. Whipple stated that he has been involved in many applications, and if they knew what the proposed layout could be it might change the discussion, but 4/5 of this development will be LC suggest that as soon as this is approved there is no stopping all permitted uses and changes all of the surrounding development. Whipple again asked Commission to remember the original neighbors.

Terry Johnson, 2863 Tipperary Lane, Idaho Falls, Idaho. Johnson is concerned with traffic. Johnson did a rough estimate of 35 units per acre and stated that 1000 units would be a small addition, and it could go up to 1700. Johnson was a power engineer and asked who has done the power studies, sewer studies, water studies, and suggests that the older homes in Cedar Ridge and Mojave could be affected by this new development. Johnson stated that if improvements need to be made, who will pay for the improvements and what is the total effect on the infrastructure that supports the neighborhoods surrounding Community Park.

Susan Forsberg, 2670 Ridge Crest Drive, Idaho Falls, Idaho. Forsberg stated that the neighbors will be impacted. Forsberg's daughter used to live on Craig because of how busy the street was and how fast the cars would drive down that street. Forsberg stated that they called the police, but they would never sit on Craig, and never site for speeding, but rather for running stop signs. Forsberg stated that Ridge Crest has heavy traffic and lots of speeding and suggested that if the City wants revenue, they should write tickets for speeding. Forsberg stated that the homes in the area are single family homes that are completely surrounding the area. Forsberg knew when they moved there that the field would be developed, but they feel that this is their worst nightmare, and they feel it will affect their property values. Forsberg asked the Commissioners to take the comments seriously. Forsberg knows the developers want to make money, but they leave, and they are not neighbors to this property and are not affected by it personally.

Jason Labelle, 2324 Craig Ave., Idaho Falls, Idaho. Labelle stated that the developers did listen to them but did not return his email. Labelle is concerned with 2 level buildings. Labelle stated that the 2 level buildings would not fit in the area and is taller than anything else in the neighborhood. Labelle doesn't want any two-level buildings adjacent to his property. Labelle is concerned about people looking into his property. Labelle is not happy with 2 story buildings and asked for them to not have 2 story buildings. Labelle stated that he knows the traffic on Craig and knows who is going through, and everybody that comes through his neighborhood do not live in this neighborhoods but are cutting through to go to the Apple or Sam's. Labelle stated that running Jennie Lee all the way through won't do anything and thinks people will still cut through Mojave because its faster, so unless they design the development with a roundabout or something that people won't be an attractive nuisance. Labelle asked them to cut off Bengal, so they quit getting Ridge Crest coming through their neighborhood. Labelle reiterated that the most important comment is that he doesn't want 2 story buildings looking into his property and consider the traffic before going into this project.

Larry Schofield, 2580 Desert Drive, Idaho Falls, Idaho. Schofield stated that he can see the field from his front doorstep. Schofield agrees with the concerns shared. Schofield doesn't feel the discussions have been well communicated and people that hear about its last minute don't know what is going on. Schofield stated that it is exhausting to get out of his neighborhood. Schofield stated that adding high density into the area will compound the problems of transportation in and out of the neighborhoods. Schofield stated that they live there because of Community Park which is more and more used and overloaded, and people are parking in the neighborhoods to access the Park, and both sides of 25th are packed during tournaments. Schofield stated that in the space it doesn't make sense to have high density as there are no major highways to move traffic. Schofield suggested adding green space or a park to the area to take away some of the overload of Community Park. Schofield stated that there are single family homes throughout the area and asked the developer to keep that consideration. Schofield stated that at one point it was promised to the neighbors by the City that they would continue the same design that is east on 25th, and Schofield is asking for consideration on curb appeal of 25th.

Jennifer Labelle, 2324 Craig, Idaho Falls, Idaho. Labelle stated that this is the best small City, and the apartments are taking away the opportunity for starter homes. Labelle stated that she was hoping for the part from Jennie Lee to Craig would be R1 so it wouldn't overwhelm the schools. Labelle feels that this high density will overwhelm the newer schools int eh City and be problematic. Labelle stated that people on top of people in high density sharing HVAC systems, you make the community riper for a tinder box if there is a pandemic or even a fire it will affect so many more families. Labelle stated that the townhouses on Jennie Lee will already make Jennie Lee a hot mess and there is no place for trucks to unload for Starbucks, and she feels this development will take away from the feel of the best small town. Labelle stated that Wasatch did talk about going to rentals so people can "owe nothing and be happy," but Labelle feels people want a home and want a castle of their own. Labelle is worried they are packing too much into a town and not allowing people to have a started home and grow.

Brent Busher, 330 Hartert, Idaho Falls, Idaho. Busher saw a sign on Holmes about the public meeting, and that is the first he had heard about the meeting and doesn't feel it was well publicized. Busher feels it would be wise to have more people involved before they make the decision. Busher feels that this development will turn Hartert into a Highway. Busher stated that Sunnyside, 17th Street, Holmes and other streets are packed, and they need to think about how to do traffic for all the new cars.

Matt Voigt, 2550 Desert Drive, Idaho Falls, Idaho. Voigt stated that with the amount of concern the residents in the area are giving, Voigt asked that more notice be involved as not enough people have seen the signs to make informed decisions. Voigt stated that without the layout and seeing what is going on this property it is hard to imagine this property being all one LC zone. Voigt asked the Commission to put the application on hold to get more comments.

Dixon stated that the staff met the legal requirements for notice but stated that if it is something small then it is overkill to notify so many, but something large like this it doesn't reach enough people, but the law is the same. Dixon asked if when there is an item that has a lot of public comment, they might consider approaching the news to mention the application to get more information to the general public. Foster stated that the public hearing sign that people saw was not for the annexation, as they don't have to post property notices for a category A annexation, and the sign they saw is the next hearing for a rezone of property. Foster stated that going above

what is required in the ordinance would create a bias, and they cannot decide what application warrants more notice.

Dixon asked about Community Park and options for parking. Dixon asked if there is any potential for increased parking at the park as often the available parking is inadequate. Beutler stated that is a question for Parks and Recreation and doesn't relate to the annexation of this property. Beutler stated that street improvements would happen to 25th and there might be better on street parking on 25th. Beutler reiterated parking is not an annexation question, but a development question. Beutler confirmed that the question is whether this property should be within the City and what the correct designation for zoning is. Dixon argued that the zoning does affect traffic and does affect parking.

Dixon asked what the plan for the design and width of 25th Street and asked if it will continue the Boulevard idea with 2 lanes separated by a strip of grass and trees. Beutler assumed yes, but that would be determined by Public Works.

Dixon stated that because of other restrictions, the highest allowed density is not achieved. Dixon asked if there is another area in town that is developed R3A and what type of density they achieved after requirements are met. Beutler stated that it is dependent on the parcel and the land that is available, mix of uses, etc. Foster added that often it is a PUD and that is Gross density not net density. Beutler agreed that they don't typically see the max of 35 units per acre. Kirkham added that the City will get an opportunity in the platting process to ensure that the City's parking and setbacks are being met with the specific plan that is presented.

Dixon asked how many stories are allowed in R2. Foster stated that R2 is allowed up to 3 and anything over 24' there is additional set back requirements.

Applicant: Clint Boyle, 2194 Snake River Parkway, Idaho Falls, Idaho. Boyle anticipates doing a traffic study and Kent Fugal in Public Works has the PTOE designation and is well versed in traffic studies and the improvements that are required. Boyle stated that they will follow any requirements that are brought up in that study, including turn lanes, signals, improvements, etc. Boyle stated that the developments impacts will be mitigated based on the traffic study and what is found in the study. Boyle stated that infill is difficult because they are surrounded by people and people have a perception of what the neighborhood is and should be. Boyle appreciates the neighbors and comments. Boyle suggested that the neighbors reach out to Wasatch Group with questions. Boyle stated that Idaho Falls is expanding outward, and it is easier to expand outward for developers because of lack of neighbors. Boyle stated that high density has been approved on 49th South which is a two-lane road. Boyle stated that when looking at infill they have to look at highest and best use for the property and there are some great amenities in this area, including Community Park. Boyle can't address the parking issue with the Park. Boyle stated that the locations that are best suited for density are where they are near services, such as grocery, park, gyms that are in a walkable distance. Boyle stated that Wasatch has worked with Apple Athletic and the residents within the area as part of their lease will have a pass to Apple. Boyle stated that there are other facilities within the project, and there will be park space within the development. Dixon stated that zoning and annexation is the question and reminded Boyle to keep to zoning and annexation information. Boyle stated that the Comprehensive Plan has this area listed for high density residential and it has been designated that way for years. Boyle stated that there is a significant public input process to develop the plans. Boyle stated that they feel that they are directly in compliance with the future land use

map and Comprehensive Plan with the designation of high density residential. Boyle stated that there is a commercial component on the north. Boyle stated that the developer will address issues as they come forward with the Preliminary Plat and other plans.

Dixon closed the public hearing.

Black explained that traffic is the number one complaint of any application. Black stated that the County has accused the City of not encouraging in-fill and they need to look at vacant lots. Black stated that the City is desperate for housing of all types and there have been a lot of applicants trying to put housing where some of the commission doesn't believe that housing belongs and those have been turned down. Black assured that the Commission is not allowing housing anywhere. Black stated that no matter where the housing is put, traffic always comes up, any commercial development, traffic comes up, it is a major issue in the City and always will be. Black stated that people are moving here and need to live somewhere. Black stated that the traffic from this development will not go into the neighborhoods, but rather 25th and Holmes would take the traffic, and those are roads that are made to move traffic. Black stated that the housing needs have changed, and starter home are not affordable anymore, and they are not being built. Black doesn't feel it is because of the greed of developers, but rather people cannot afford the houses because lots are more expensive, supplies and everything has gone up and people cannot afford to build a home here. Black stated that she is aware that no one wants apartments in their neighborhood, but people need to start somewhere. Black stated that higher density housing houses young married couples, INL interns, college students, single moving out. Black stated that people need to live somewhere and start somewhere. Black stated that this development is near two newer schools, you can walk to groceries, and that should make less of a traffic imprint. Black stated that this development is not in the middle of a housing development and creating impact on the housing. Black feels it makes sense to put housing in this place. Black stated that after parking, landscaping and drainage, the density is not as scary as what the numbers could make it sound. Black feels that this area makes sense for housing.

Morrison supports the project and feels this area is prime for varied uses, and there is a need for mixed housing in Idaho Falls. Morrison feels it will be a good addition. Morrison has been looking forward to this property being taken from being an island in the City, and he feels it will be a benefit to the community.

Denney is in support of this project and agrees that this type of housing is needed. Denney stated that this is a good spot for housing by Holmes and close to Sunnyside and 17th Street. Denney stated that the numbers for R2 look scary, but the landscaping requirements, parking, setbacks, etc., they cannot fill the entire area with that much housing as other areas are dedicated and have to be figured into the density.

Wimborne stated that infill projects are challenging as neighborhoods have grown up around the space. Wimborne reminded the Commission that the proposal is annex the property with the LC and R2 Zone. Wimborne asked if that zoning is appropriate for this parcel. Wimborne agreed that the requested zones do make sense because it is laid out in the Comprehensive Plan for a long time. Wimborne agreed there are issues that need to be addressed as the developer moves forward with the project and encouraged the developer to think about the comments and concerns shared and take them into consideration as they develop the preliminary plat, including how traffic flows in and out, impact on surrounding area, what makes sense for people, neighborhood, and town. Wimborne stated that when the preliminary plat comes before the

Commission, this Commission will take a good look at the issues as much as they can based on the zoning ordinances. Wimborne reiterated that the Comprehensive Plan has envisioned this piece and it make sense, and it is good to bring this parcel into the City. Wimborne indicated that parking is an issue at the Park and the City needs to expand its parks as the City grows.

Morrison stated that this is the time when the developer needs to look at access and hopes they will take that into consideration.

Hicks stated that traffic has been a problem at every meeting he has been to, and it is getting worse. Hicks explained that traffic is not an item that the Commission can solve based on the rules that the Commission is charged to live by. Hicks stated that they can do everything they can to make sure the developer maximizes the use of the traffic patterns. Hicks complimented the developer on having a meeting with the neighbors. Hicks supports this application as submitted.

Romankiw agrees with the Commissioners that traffic is a problem everywhere in town. Romankiw is concerned with the character of 25th Street as there are very few Boulevard type streets in this town and hopes they can maintain the character. Romankiw reminded the Commission that they are bound by law and the scope of their review of the issues is limited and all that is before the Commission is annexation and initial Zoning. Romankiw stated that annexation is a no brainer and initial zoning does comply with the policies in the Comprehensive Plan and the land use map.

Dixon kept his remarks until after the vote.

Hicks moved to recommend to the Mayor and City Council approval of the Annexation of 55.02 Acres in the NW ¼ Section of 29, T 2N, R38 E, with initial zoning of LC and R2, Morrison seconded the motion. Dixon called for roll call vote: Black, yes; Denney, yes; Romankiw, yes; Hicks, yes; Morrison, yes; Wimborne, yes. The motion passed unanimously.

Dixon understands this neighborhood and has felt sorry for the people that live on Craig for decades because of the amount of traffic they get. Dixon has hoped that Jennie Lee would push through to 25th Street to stop traffic from cutting through Craig. Dixon stated that this is a unique property as it is near the center of things. Dixon indicated that infill is important especially for utilities. Dixon stated that infill usually is higher density, but he had hoped this property would develop into the high school, but the value of the property was too high for that. Dixon asked staff to forward the BMPO's letter that he received to the rest of the Commissioners. Dixon stated that in the comprehensive plan higher density is on the edge of residential rather than the core, so the traffic generated doesn't have to go past lower density. Dixon stated that this property is surrounded by streets that are designated for higher traffic flow. Dixon feels that this property developed as higher density or commercial is a good use for this location. Dixon thanked the public for the way they presented information. Dixon stated that City Council and the Mayor make the final decision and they hold the accountability. Dixon stated that if the Mayor and City council go forward with the application the next phase would be platting, streets, traffic study. Dixon told the developer that the townhouses to the north on Jennie Lee were mentioned and that developer buffered with a guest parking lot up against the existing residential.

Dixon called a 10-minute recess.

Dixon called the meeting back to order.

Naysha Foster

From: Michael Erickson <merickson@voigtdavis.com>
Sent: Monday, November 8, 2021 2:43 PM
To: Naysha Foster
Subject: Apple Development

CAUTION: This email originated from outside of the organization. Do not click links or open attachments unless you recognize the sender and know the content is safe.

Good Evening,
I'm writing with concerns regarding the development being planned at what has been labeled The Apple Development . We have heard that 850 apartments, along with townhomes, and commercial prospects like grocery stores and high traffic commercial companies, we feel it is imperative to keep the speed limit in the area at 25 mph, continue the trees down the center of 25th, increase parking on the easements along the road and change the location of where the through road from Jennie Lee will be. There needs to be multiple entrances and exits to major roads and the one through road (Jennie Lee) we think should be closer to Community Park and Holmes. We also want to keep the streets, sidewalks, and other areas clean and with trees and other landscaping to maintain the quality of the surrounding neighborhoods. With the increase in the population of Edgemont and Longfellow elementary schools, along with the flow of traffic (since this is the third multi-level housing project in a very short range between Sunnyside, Holmes and Jennie Lee that has been approved), you need to consider what zoning changes need to take place and make sure you take into consideration what this will do to those of us who currently live in the area and utilize the streets and park. There needs to be major research on how this will affect the flow of traffic. Community Park can barely handle the current parking situation when they have tournaments and community activities and events, with an additional 850 apartments not to mention all the rest of the residential neighborhoods, please take this development and the zoning types into major consideration. We are members of the community that is excited about growth and are happy to see change but we just want to make sure we are careful not to ruin Holmes, Sunnyside and 17th street because right now the flow is currently a mess during high traffic times and this is without the 3 big developments involved.
Thank you.
Best,
Michael and Brandi Erickson
208-760-0699

HORROCKS
ENGINEERS

1 Snake River Parkway., Suite 205
Idaho Falls, ID 83402

(208) 522-1223
www.horrocks.com

OWNER

CITY

Com

Naysha Foster

From: Kerry Beutler
Sent: Tuesday, November 9, 2021 8:00 AM
To: Naysha Foster
Subject: FW: zoning change

…a Plan to Move Idaho Falls Forward Together https://www.idahofallsidaho.gov/1609/Imagine-IF

Community Development Services Department Kerry Beutler | Assistant Planning Director

680 Park Avenue
Idaho Falls, Idaho 83402
Work: (208) 612-8278
kbeutler@idahofallsidaho.gov

-----Original Message-----
From: Susan Forsberg <foxcourt02@icloud.com>
Sent: Monday, November 8, 2021 7:37 PM
To: Kerry Beutler <kbeutler@idahofalls.gov>
Cc: Office of the Mayor <Mayor@idahofalls.gov>
Subject: zoning change

CAUTION: This email originated from outside of the organization. Do not click links or open attachments unless you recognize the sender and know the content is safe.

We live in Cedar Ridge and are very concerned about the zoning change being proposed along 25th South. The increase in traffic is a serious concern. The heavily used park is right across the street. Many children go there with and without parents. Children will be at increased risk of getting hit with the heavy traffic. Many elementary schools take students there in the spring and Apple Club takes the day care kids there, also.

Community Park is frequently used for tournaments and league play. Cars are parked along the side of the road and people are crossing wherever they're parked. There are accidents waiting to happen with high density housing and the greatly increased traffic going in and out.

We always expected that eventually the area would be developed and high density housing was the nightmare scenario we dreaded.

The residential streets certainly don't need more traffic. Cars speed along Ridgecrest (where we live) and Craig (where our daughter used to live). We've talked with the police but they do nothing but sit along 25th to get speeders along that street. We certainly don't want more traffic from high density housing. These are nice residential areas with single family homes and a few twin homes. We've seen several new high density units being built around town and they look cheap and we're afraid will look like a slum within 10 years. PLEASE DON'T DO THIS TO THIS AREA.

The intersections at 17th and Holmes and Holmes and Sunnyside are already overstressed. It can take more than one light to get through. This decision will exacerbate an already bad situation.

Turning the area into high density housing might help the tax base for the city but greatly harm lovely residential neighborhoods. Allow a neighborhood that fits into what has existed for many decades in the area, not high density.

Adding this high density to the high density housing being put in on Jenny Lee will turn this area into a nightmare. This decision will make money for the developer but destroy the investment for the homeowners who live here.

Sincerely,
Susan and Perry Forsberg
2670 Ridgecrest Dr.
Idaho Falls, Id 83404

From:	Kerry Beutler
To:	Naysha Foster
Subject:	FW: ANNX21-016, Annx 55.02 property behind Home Depot
Date:	Tuesday, November 9, 2021 2:58:00 PM
Attachments:	image001.png image003.png

…a Plan to Move Idaho Falls Forward Together
https://www.idahofallsidaho.gov/1609/Imagine-IF

IDAHO FALLS

Community Development Services Department
Kerry Beutler | Assistant Planning Director

680 Park Avenue
Idaho Falls, Idaho 83402
Work: (208) 612-8278
kbeutler@idahofallsidaho.gov

From: Terri Gazdik <tgazdik@coopernorman.com>
Sent: Tuesday, November 9, 2021 2:47 PM
To: Kerry Beutler <kbeutler@idahofalls.gov>
Subject: ANNX21-016, Annx 55.02 property behind Home Depot

CAUTION: This email originated from outside of the organization. Do not click links or open attachments unless you recognize the sender and know the content is safe.

Kerry

Brad told me you were the person to contact on this issue…..

This might be late but I wanted to forward some concerns that the neighborhood residence owners have that live in Cedar Ridge off 25th street by Community Park. These are observations but also suggestions for improving the proposed development to the north of 25th street.

* The areas to the South and East of the development have R1 zoning as does 25th down to

St. Clair at least. The existing property owners and Community Park deserve to have a good buffer zone between them and a dense apartment project and commercial entities.

*25th Street has to be upgraded with the center dividers and bike paths to Holmes Ave. This is only way to protect the park and keep a uniform look for our city.

*the backyards that face 25th need cement fences put behind them. The houses were there before the road was put in and it is not right to ask the homeowners to be responsible for frontage on the front and rear of their properties.

*Including an R2 buffer that extends down the East side of the property and along the south side where there are residences finishes the street off nicely and also buffers Zone 1 from the apartment and commercial zone.

*Having the street turn and exit around the middle of community park gets rid of issues with headlights and will help slow traffic on Jennie Lee. It also makes a good transition zone to the apartments that does not ruin the character of 25th Street and the park.

*25th street is not made for heavy traffic and should only have the one outlet for Jennie Lee

*Light commercial is all that should be allowed by the park.

Thanks for taking the time to read this Kerry – I appreciate whatever help you can provide.

Terri Gazdik CPA, CVA
PARTNER

208-523-0862
208-525-8038 Fax

Cooper Norman | CONQUERING UNCERTAINTY
1000 Riverwalk Dr. Suite 100, PO Box 51330, Idaho Falls, ID 83405

www.coopernorman.com

Naysha Foster

From: larry@pro-seeker.com
Sent: Thursday, November 4, 2021 5:51 PM
To: Naysha Foster
Cc: breezewest@gmail.com
Subject: Plan for property behind Home Depot

CAUTION: This email originated from outside of the organization. Do not click links or open attachments unless you recognize the sender and know the content is safe.

Naysha,

I am seconding the words of my neighbor Dad West. Until today, I was unaware of the public discussion about the annexation and zoning of the property behind Home Depot. I live across the street from this undeveloped land.

Our concern is the existing property owners and Community Park. We want to make sure they are protected during this major expansion in our city.

The neighborhoods around the project and down 25th street are Zone 1. We believe there has to be a buffer and restrictions put in place to protect their quality of life while allowing for development of the property.

We also want to make sure a beautiful and heavily used park is protected.

I have attached a layover of the original zoning proposal and ask the planning commission to take this into consideration when proposing zoning changes to the city council.

We believe that their at least needs to be an R2 zone buffer between the homeowners and the apartments that are proposed. We also believe their needs to be serious consideration on what if any commercial goes across from the park.

We have always been promised that 25th street would be upgraded with the middle divider and trees when the field was annexed by the city. We were also told that the fence and sidewalks would be upgraded behind our three backyards that are on 25th street. We want to make sure this is included and happens as well.

Best Regards,

Larry Schofield
2580 Desrert Dr.
Idaho Falls, ID 83404

Larry@Pro-Seeker.com
(208) 604-2000

Annexation and Initial Zoning

Legend

ANNX21-016

City Limit

Overlays

PT

PT&T-1

PUD

T-1

T-2

Zoning

RE

RP

R1

R2

TN

RMH

R3

R3A

PB

Sincerely,

Dan & Malinda West

2540 Desert Dr, Idaho Falls, ID 83404

208-589-4326

--

Regards, Dan West Sent from Gmail Mobile

--
Regards, Dan West Sent from Gmail Mobile

Naysha Foster

From: Kerry Beutler
Sent: Tuesday, November 9, 2021 8:04 AM
To: Naysha Foster
Subject: FW: ANNX21-016 60 acre mixed use development

...a Plan to Move Idaho Falls Forward Together
https://www.idahofallsidaho.gov/1609/Imagine-IF

Community Development Services Department
Kerry Beutler | Assistant Planning Director

680 Park Avenue
Idaho Falls, Idaho 83402
Work: (208) 612-8278
kbeutler@idahofallsidaho.gov

From: Wes Peach <wes_peach@hotmail.com>
Sent: Tuesday, November 9, 2021 7:16 AM
To: Kerry Beutler <kbeutler@idahofalls.gov>
Subject: Re: ANNX21-016 60 acre mixed use development

CAUTION: This email originated from outside of the organization. Do not click links or open attachments unless you recognize the sender and know the content is safe.

Concerns about this project:

-Along with the apartments currently under construction up the road, it creates an ever changing transient population of up to 2500 people or more on a half mile stretch of Jennie Lee Drive.

-Increased traffic, crime, taxes, overcrowded schools.

-The apartments will become defacto public housing projects with the Federal government, through subsidized rent, resettling illegal aliens, refugees, and former public housing residents from big cities back east and California.

It is sad that Idaho Falls, like the rest of the nation, has allowed large outside financial interests to seize control and dictate the type of housing that we have to offer our citizens. Up until a few years ago it was possible for a person in their early 20s with a decent job to buy a house here. Now all the city can offer our young people is a lifetime rental of a 1 bedroom apartment.

Charles Peach
2251 Craig Avenue
Idaho Falls, ID 83404
208-542-5370

Naysha Foster

From: Dan West <breezewest@gmail.com>
Sent: Thursday, November 4, 2021 12:31 PM
To: Naysha Foster
Subject: Plan for property behind Home Depot

CAUTION: This email originated from outside of the organization. Do not click links or open attachments unless you recognize the sender and know the content is safe.

Naysha,
I am writing to you concerning the annexation and zoning of the property behind Home Depot.

Our concern is the existing property owners and Community Park. We want to make sure they are protected during this major expansion in our city.

The neighborhoods around the project and down 25th street are Zone 1. We believe there has to be a buffer and restrictions put in place to protect their quality of life while allowing for development of the property.
We also want to make sure a beautiful and heavily used park is protected.

I have attached a layover of the original zoning proposal and ask the planning commission to take this into consideration when proposing zoning changes to the city council.

We believe that their at least needs to be an R2 zone buffer between the homeowners and the apartments that are proposed. We also believe their needs to be serious consideration on what if any commercial goes across from the park. We have always been promised that 25th street would be upgraded with the middle divider and trees when the field was annexed by the city. We were also told that the fence and sidewalks would be upgraded behind our three backyards that are on 25th street. We want to make sure this is included and happens as well.

Please let me know what else We can do to help with this process.

Sincerely,
Dan & Malinda West
2540 Desert Dr, Idaho Falls, ID 83404
208-589-4326

Annexation and Initi

Legend

ANNX21-016

City Limit

Overlays

PT

PT&T-1

PUD

T-1

--
Regards, Dan West Sent from Gmail Mobile

From: Kerry Beutler
To: Naysha Foster
Subject: FW: Apartments
Date: Wednesday, November 10, 2021 10:51:07 AM

Add to the folder so it can be sent along to city council. Thanks

…a Plan to Move Idaho Falls Forward Together
https://www.idahofallsidaho.gov/1609/Imagine-IF

Community Development Services Department
Kerry Beutler | Assistant Planning Director

680 Park Avenue
Idaho Falls, Idaho 83402
Work: (208) 612-8278
kbeutler@idahofallsidaho.gov

-----Original Message-----
From: Hildebrandt Family <jayhilde@earthlink.net>
Sent: Wednesday, November 10, 2021 10:14 AM
To: Kerry Beutler <kbeutler@idahofalls.gov>
Subject: Apartments

CAUTION: This email originated from outside of the organization. Do not click links or open attachments unless you recognize the sender and know the content is safe.

We have a serious concern about the impact the proposed high density apartment complex would have on the traffic on 25th Street and on our neighborhood in general. We are aware that there is an existing parking problem at Community Park during the many athletic events taking place there and we are concerned that the apartment complex would only add to that problem. Another concern is that there is a high density complex already in progress on Jennie Lee Drive, less than a mile away, and another high density apartment complex, The Meadowood apartments, less than 1/4 mile away on St. Clair. In addition, there is a recent high density complex on St. Clair, just south of the Hallpark shopping center. In short, within a mile square, there are already 3 high density complexes. There has been no modification to the infrastructure to accommodate the complexes already built or in progress. There is only a single lane in each direction on 25th Street and another complex would add to the traffic problem. Residents of Shamrock Park, Jennie Lee, and Cedar Ridge are already experiencing more difficulty turning onto 25th Street from our neighborhoods. High density complexes typically do not accommodate adequate parking for visitors, or even residents with multiple vehicles. For example, on St. Clair, next to the Meadowood complex, there are cars parked constantly on both sides of the narrow street. With the proposed complex across from Community Park, we are afraid that the visitors would use the already overused Community Park parking lot or else park along 25th Street.

In short, we oppose the zoning change that would allow the proposed complex to be built at this location. We propose that the city purchase a portion of this land to expand parking for Community Park and possible to add additional park facilities. Please do not allow a development that would add any more stress to an already inadequate traffic and parking situation in our neighborhood.

Jay and Sally Hildebrandt

1174 County Cork Lane

Ann Peterson

From: Brad Cramer
Sent: Thursday, February 10, 2022 3:49 PM
To: Jeff Carr
Cc: Shamrock Park; Ann Peterson
Subject: RE: comment for zoning hearing tonight

Thank you for your email and support. I'll make sure this is sent on the City Council. We are also trying to make people aware who haven't already heard that due to an error by the Post Register in publishing our legal ad, the hearing will not be proceeding tonight. It has been moved to February 24th.

Please let us know if you have any further questions or concerns.

Thank you.

IDAHO FALLS

Community Development Services
Brad Cramer | *Director*

680 Park Avenue
Idaho Falls, Idaho 83402
Work: (208) 612-8276
Fax: (208) 612-8520
bcramer@idahofallsidaho.gov

From: Jeff Carr <jeffreystevencarr@gmail.com>
Sent: Thursday, February 10, 2022 11:31 AM
To: Brad Cramer <BCramer@idahofalls.gov>
Cc: Shamrock Park <shamrockpark@gmail.com>
Subject: comment for zoning hearing tonight

CAUTION: This email originated from outside of the organization. Do not click links or open attachments unless you recognize the sender and know the content is safe.

Hello Brad,

I will not be able to attend the zoning hearing tonight, but I wanted to make sure our thoughts were represented. Thanks to the Shamrock Park HOA for making this opportunity known.

Our family of five lives in and adores the Shamrock Park neighborhood, and as such, the new property at 25th and Holmes will impact us. We want it to be very clear that we are in **full support** of the annexation and plan for mixed-use development, including with commercial and higher-density residential. This remains sorely needed in our city, and even if we get a bit more traffic on 25th, we are pleased to see the long overdue development of this land in thoughtful ways. You may hear concerns from some of our wonderful neighbors who are understandably suspicious of change, but we wanted to make it clear that there are plenty of us right here who wholeheartedly welcome the sorts of intelligent infill growth that this project represents.

Consider us YIMBY. Thanks.

-Jeff & Sarah Carr

Ann Peterson

From: Brad Cramer
Sent: Thursday, February 10, 2022 3:47 PM
To: Jerry Johnson
Cc: Ann Peterson
Subject: RE: Property next to Home Depot

Thank you for your email and concerns. I'll make sure they are sent on the City Council. We are also trying to make people aware who haven't already heard that due to an error by the Post Register in publishing our legal ad, the hearing will not be proceeding tonight. It has been moved to February 24th.

Please let us know if you have any further questions or concerns.

Thank you.

IDAHO FALLS

Community Development Services
Brad Cramer | *Director*

680 Park Avenue
Idaho Falls, Idaho 83402
Work: (208) 612-8276
Fax: (208) 612-8520
bcramer@idahofallsidaho.gov

From: Jerry Johnson <jerrymaryjohn@hotmail.com>
Sent: Thursday, February 10, 2022 8:59 AM
To: Brad Cramer <BCramer@idahofalls.gov>
Subject: Property next to Home Depot

CAUTION: This email originated from outside of the organization. Do not click links or open attachments unless you recognize the sender and know the content is safe.

I'm concerned about the concentration of apartments being considered for this site. I'm appalled at the apartments being crammed on that lot next to the old Shopko, and fear you may be approving more of the same!
At the very least, I strongly recommend three features be added. (1) adequate onsite parking for residents. After the city's parking fiasco with the apartments built between Woodruff and St. Clair south of 17th, it is important that this construction not plan on residents parking their cars in the Community Park parking lot; (2) to avoid that happening, put up signs in the Community Park parking lot making it illegal to park cars there overnight; (3) Ditto on 17th Street; (4) Require an exterior fence be built around the whole project with adequate shrubbery and trees. If that project expects to have children in the apartments, the fence is mandatory to protect those children from being injured by the 40 mph+ traffic on Holmes; (5) even though the park is next door, a project this size should have its own playground.
Jerry Johnson

Ann Peterson

From: Brad Cramer
Sent: Thursday, February 10, 2022 3:46 PM
To: Lynette Carter
Cc: Ann Peterson
Subject: RE: Zoning hearing on property by Home Depot

Thank you for your email and concerns. I'll make sure they are sent on the City Council. We are also trying to make people aware who haven't already heard that due to an error by the Post Register in publishing our legal ad, the hearing will not be proceeding tonight. It has been moved to February 24th.

Please let us know if you have any further questions or concerns.

Thank you.

IDAHO FALLS

Community Development Services
Brad Cramer | *Director*

680 Park Avenue
Idaho Falls, Idaho 83402
Work: (208) 612-8276
Fax: (208) 612-8520
bcramer@idahofallsidaho.gov

From: Lynette Carter <havesomefun2day@gmail.com>
Sent: Thursday, February 10, 2022 8:41 AM
To: Brad Cramer <BCramer@idahofalls.gov>
Subject: Zoning hearing on property by Home Depot

CAUTION: This email originated from outside of the organization. Do not click links or open attachments unless you recognize the sender and know the content is safe.

Hello,
I'm writing to voice my opinion on the zoning changes being proposed for the property next to Home Depot. We have lived near community park for 24 years and my children have grown up going to that park for all kinds of activities. They walked to school through that park while attending Long Fellow Elementary School. Played baseball, soccer and football at that park when they were young. I use that park multiple times a week to get some exercise. It's a valuable asset to our community and one that's enjoyed by a lot of people in Idaho Falls. Travel and parking can be an issue at times, and I fear if this new zoning request is approved it could make travel very difficult on both 25th St. and the Jenny Lee Rd areas. High density housing will bring a lot more vehicles to this area which could be dangerous for elementary students walking to school and other patrons to the park, as well as the neighborhood and businesses in the Jenny Lee area.

Please, for the safety and enjoyment of our community consider your decision very carefully in re-zoning the property. There is already another high density housing development going in on Jenny Lee Rd and I fear adding another one just a short distance away will cause all kinds of traffic problems and danger for those of us living and traveling in that area.

We moved to Idaho Falls because we loved the feel of the city and the beauty of the area. High density housing will not add to the attractiveness of our community and will be a problem on the property located next to Home Depot.

Thanks for your consideration, and for taking the time to think about the community we live in.

Sincerely,

Lynette Carter
havesomefun2day@gmail.com

ORDINANCE NO. _____

AN ORDINANCE OF THE CITY OF IDAHO FALLS, IDAHO, A MUNICIPAL CORPORATION OF THE STATE OF IDAHO; PROVIDING FOR THE ANNEXATION OF APPROXIMATELY 55.033 ACRES DESCRIBED IN EXHIBIT A OF THIS ORDINANCE, AMENDING THE LEGAL DESCRIPTION OF THE CITY WITH THE APPROPRIATE COUNTY AND STATE AUTHORITIES; AND PROVIDING SEVERABILITY, PUBLICATION BY SUMMARY, AND ESTABLISHING EFFECTIVE DATE.

WHEREAS, the lands described in Exhibit A of this Ordinance are contiguous and adjacent to the City limits of the City of Idaho Falls, Idaho; and

WHEREAS, such lands described herein are subject to annexation to the City pursuant to the provisions of Idaho Code Section 50-222, and other laws, as amended; and

WHEREAS, the annexation of the lands described in Exhibit A is reasonably necessary to assure the orderly development of the City in order to allow efficient and economically viable provision of tax-supported and fee-supported municipal services; to enable the orderly development of private lands which benefit from a cost-effective availability of City services in urbanizing areas; and to equitably allocate the costs of City/public services in management of development on the City's urban fringe; and

WHEREAS, the City has authority to annex lands into the City pursuant to procedures of Idaho Code Section 50-222, as amended; and

WHEREAS, any portion of a highway lying wholly or partially within the lands to be annexed are included in the lands annexed by this Ordinance; and

WHEREAS, the lands annexed by this Ordinance are not connected to the City only by a "shoestring" or a strip of land which comprises a railroad or right-of-way; and

WHEREAS, all private landowners have consented to annexation of such lands, where necessary; and

WHEREAS, City of Idaho Falls Comprehensive Plan includes the area of annexation; and

WHEREAS, after considering the written and oral comments of property owners whose lands would be annexed and other affected persons, City Council specifically makes the following findings:

1) That the lands annexed meet the applicable requirements of Idaho Code Section 50-222 and does not fall within exceptions or conditional exceptions contained in Idaho Code Section 50-222;

2) The annexation is consistent with public purposes addressed in annexation and related plans prepared by the City; and

3) Annexation of the lands described in Section 1 are reasonably necessary for the orderly development of the City; and

WHEREAS, it appears to the Council that the lands described herein below in Exhibit A of this Ordinance should be annexed to and become a part of the City of Idaho Falls, Idaho; and

WHEREAS, the City wishes to exercise jurisdiction over the annexed lands in a way that promotes the orderly development of such lands; and

WHEREAS, the City of Idaho Falls Comprehensive Plan sets out policies and strategies designed to promote and sustain future growth within the City; and

WHEREAS, such designation is consistent with policies and principles contained within the City of Idaho Falls Comprehensive Plan; and

WHEREAS, the City desires the City of Idaho Falls Comprehensive Plan Map to be amended to reflect the designation contained in this Ordinance.

NOW THEREFORE, BE IT ORDAINED BY THE MAYOR AND COUNCIL OF THE CITY OF IDAHO FALLS, IDAHO, as follows:

SECTION 1. Annexation of Property. The lands described in Exhibit A are hereby annexed to the City of Idaho Falls, Idaho.

SECTION 2. Amended Map and Legal Description. The City Clerk shall file a certified copy of this Ordinance with the Bonneville County Auditor, Treasurer, and Assessor, within ten (10) days after the effective date hereof. The City Engineer shall, within ten (10) days after such effective date, file an amended legal description and map of the City, with the Bonneville County Recorder and Assessor and the Idaho State Tax Commission, all in accordance with Idaho Code Section 63-2215.

SECTION 3. Findings. The findings contained in the recitals of this Ordinance be, and the same are hereby adopted as the official City Council findings for this Ordinance, and any further findings relative to this Ordinance shall be contained in the officially adopted Council minutes of the meeting in which this Ordinance was passed.

SECTION 4. Savings and Severability Clause. The provisions and parts of this Ordinance are intended to be severable. If any section, sentence, clause or phrase of this Ordinance should be held to be invalid or unconstitutional by a court of competent jurisdiction, such invalidity or unconstitutionality shall not affect the validity or constitutionality of any other section, sentence, clause or phrase of this Ordinance.

SECTION 5. Publication. This Ordinance, or a summary thereof in compliance with Idaho Code, shall be published once in the official newspaper of the City, and shall take effect immediately upon its passage, approval, and publication.

SECTION 6. Effective Date. This Ordinance shall be in full force and effect from and after its passage, approval and publication.

PASSED BY THE COUNCIL AND APPROVED BY THE MAYOR this_____day of _____, 2022.

_____
Rebecca L. Noah Casper, Mayor

ATTEST:

_____
Kathy Hampton, City Clerk

(SEAL)

STATE OF IDAHO)
: ss.
County of Bonneville)

I, KATHY HAMPTON, CITY CLERK OF THE CITY OF IDAHO FALLS, IDAHO, DO HEREBY CERTIFY:

That the above and foregoing is a full, true and correct copy of the Ordinance entitled: "AN ORDINANCE OF THE CITY OF IDAHO FALLS, IDAHO, A MUNICIPAL CORPORATION OF THE STATE OF IDAHO; PROVIDING FOR THE ANNEXATION OF APPROXIMATELY 55.033 ACRES DESCRIBED IN EXHIBIT A OF THIS ORDINANCE, AMENDING THE LEGAL DESCRIPTION OF THE CITY WITH THE APPROPRIATE COUNTY AND STATE AUTHORITIES; AND PROVIDING SEVERABILITY, PUBLICATION BY SUMMARY, AND ESTABLISHING EFFECTIVE DATE."

_____

Kathy Hampton, City Clerk

(SEAL)

EXHIBIT A

LEGAL DESCRIPTION

Apple Development Annexation Parcel

A parcel of land located in the Northwest Quarter of Section 29, Township 2 North, Range 38 East, Boise Meridian, Bonneville County, Idaho more particularly described as follows:

Commencing at the Northwest corner of said Section 29, being marked by a 5/8" rebar with an aluminum cap as shown on Corner Perpetuation and Filing, Instrument No. 1638497; thence along the West line of said Section 29, South 00°06'57" East 1661.16 feet to the Southwest corner of City of Idaho Falls Annexation Ordinance No. 2244; thence along the south line of said Ordinance No. 2244, North 89°53'03" East 80.00 feet to the Point of Beginning; thence continuing along said South line, North 44°53'03" East 56.57 feet; thence continuing along said South line, North 89°53'03" East 520.93 feet to the Southeast corner of said Ordinance No. 2244; thence along the East line of said Ordinance No. 2244, North 00°04'53" West 142.65 feet to the South line of City of Idaho Falls Annexation Ordinance No. 1613; thence along said South line the following six (6) courses; (1) thence South 89°28'20" East 788.95 feet to a point of tangency of a 867.06 foot radius curve concave to the northwest of which radius bears North 00°31'43" East; (2) thence 351.93 feet along the arc of said 867.06 foot radius curve to the left through a central angle of 23°15'20" and a long chord that bears North 78°54'03" East 349.52 feet to a point of reverse curvature of a 682.93 foot radius curve concave to the southeast of which radius bears South 22°43'37" East; (3) thence 247.73 feet along the arc of said 682.93 foot radius curve to the right through a central angle of 20°47'02" and a long chord that bears North 77°39'54" East 246.37 feet to a point of compound curvature of a 20.00 foot radius curve concave to the southwest of which radius bears South 01°56'35" East; (4) thence 32.10 feet along the arc of said 20.00 foot radius curve to the right through a central angle of 91°58'26" and a long chord that bears South 45°57'22" East 28.77 feet to a point of compound curvature of a 500.00 foot radius curve concave to the northwest of which radius bears North 89°58'08" West; (5) thence 92.47 feet along the arc of said 500.00 foot radius curve to the right through a central angle of 10°35'45" and a long chord that bears South 05°19'44" West 92.33 feet; (6) thence North 90°00'00" East 321.25 feet to the West line of City of Idaho Falls Annexation Ordinance No. 1165; thence along said West line, South 00°00'00" East 840.02 feet; thence continuing along said West line, South 89°31'38" East 23.09 feet; thence continuing along said West line, South 00°00'00" East 50.00 feet to the Northeast corner of Warranty Deed, Instrument No. 1493174; thence along the North line of said Warranty Deed, North 89°31'38" West 5.00 feet; thence along the West line of said Warranty Deed, South 00°00'00" East 115.37 feet to the North line of City of Idaho Falls Annexation Ordinance No. 3231; thence along said North line, North 89°31'35" West 155.10 feet; thence along the West line of said Ordinance No. 3231, South 00°00'00" East 120.86 feet to the North line of City of Idaho Falls Annexation Ordinance No. 1715; thence along the North line of said Ordinance No. 1715 the following three (3) courses; (1) thence North 89°22'22" West 439.48 feet; (2) thence North 89°57'09" West 939.95 feet; (3) thence North 89°41'57" West 561.71 feet to the Southeast corner of City of Idaho Falls Annexation Ordinance No. 3231; thence along the East line of said Ordinance No. 3231, North 00°56'27" East 193.92 feet to the North line of said Ordinance No. 3231; thence along said North line, North 88°24'17" West 190.23 feet to the East line of City of Idaho Falls Annexation Ordinance No. 1715; thence along said East line, North 00°06'57" West 201.56 feet to the South line of said Ordinance No. 3231; thence along said South line, South 89°35'00" East 171.73 feet to the East line of said Ordinance No. 3231; thence along said East line, North 00°04'00" East 200.00 feet to the North line of said Ordinance No. 3231; thence along said North line, North 89°35'00" West 172.37 feet to the East line of said Ordinance No. 1715; thence along said East line, North 00°06'57" West 331.34 feet to the Point of Beginning.

Parcel contains 55.033 acres.

Submitted by:

Eng/Survey Firm Name: Horrocks Engineers, Inc. / Creek Hollow & Associates, Inc.

Contact Name: Leith Sheets, PE / Chris Adams, PLS

Phone Number: 208-522-1223 / 208-709-3113

Email: leiths@horrocks.com / adams@creekhollowinc.com

PLS Seal: PROFESSIONAL LAND SURVEYOR REGISTERED 12457 2-1-22 STATE OF IDAHO CHRISTOPHER ADAMS

Page____ of____

ORIGINAL

ANNEXATION ORDINANCE # _____

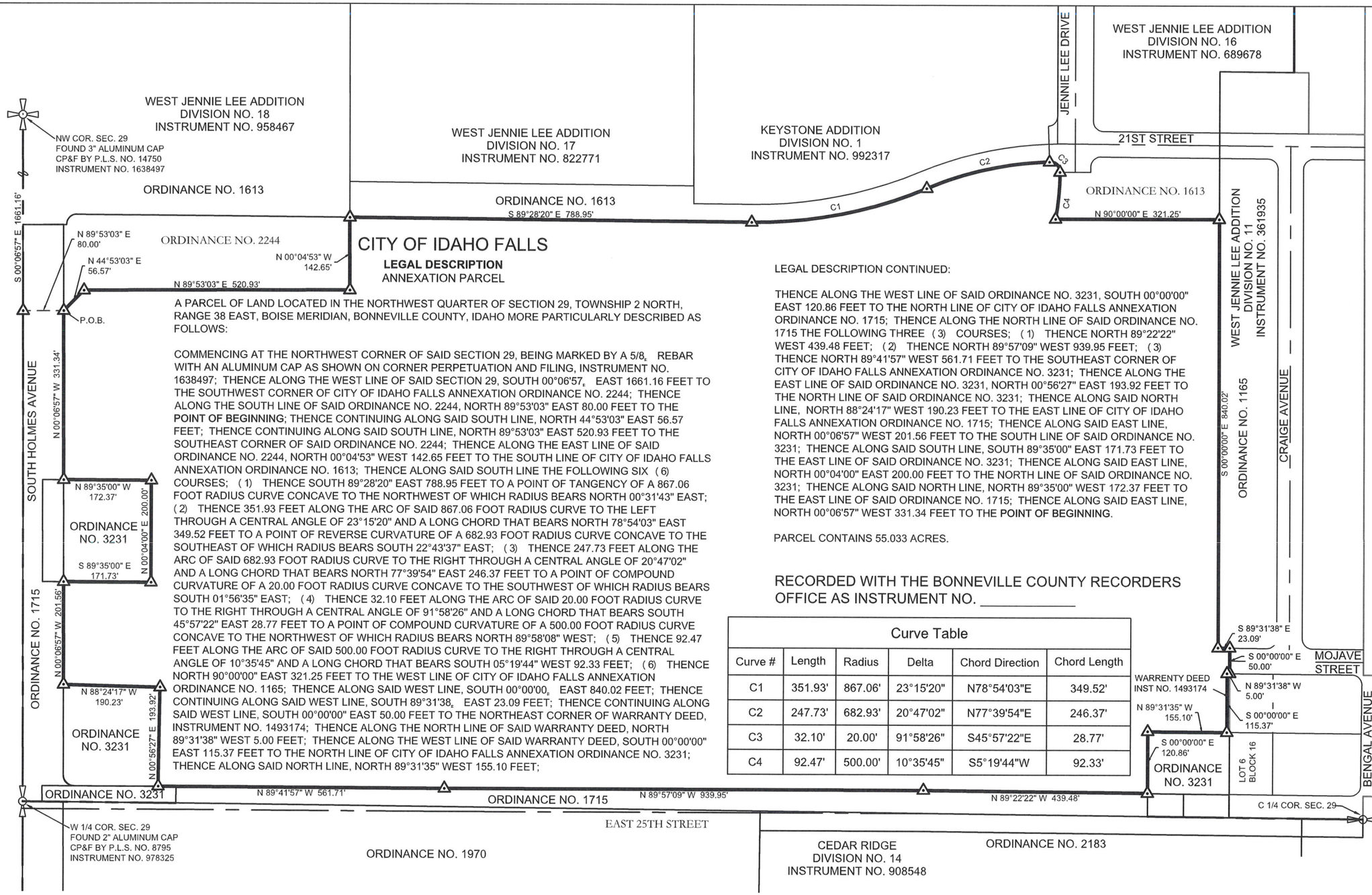

CITY OF IDAHO FALLS

LEGAL DESCRIPTION
ANNEXATION PARCEL

A PARCEL OF LAND LOCATED IN THE NORTHWEST QUARTER OF SECTION 29, TOWNSHIP 2 NORTH, RANGE 38 EAST, BOISE MERIDIAN, BONNEVILLE COUNTY, IDAHO MORE PARTICULARLY DESCRIBED AS FOLLOWS:

COMMENCING AT THE NORTHWEST CORNER OF SAID SECTION 29, BEING MARKED BY A 5/8" REBAR WITH AN ALUMINUM CAP AS SHOWN ON CORNER PERPETUATION AND FILING, INSTRUMENT NO. 1638497; THENCE ALONG THE WEST LINE OF SAID SECTION 29, SOUTH 00°06'57" EAST 1661.16 FEET TO THE SOUTHWEST CORNER OF CITY OF IDAHO FALLS ANNEXATION ORDINANCE NO. 2244; THENCE ALONG THE SOUTH LINE OF SAID ORDINANCE NO. 2244, NORTH 89°53'03" EAST 80.00 FEET TO THE **POINT OF BEGINNING**; THENCE CONTINUING ALONG SAID SOUTH LINE, NORTH 44°53'03" EAST 56.57 FEET; THENCE CONTINUING ALONG SAID SOUTH LINE, NORTH 89°53'03" EAST 520.93 FEET TO THE SOUTHEAST CORNER OF SAID ORDINANCE NO. 2244; THENCE ALONG THE EAST LINE OF SAID ORDINANCE NO. 2244, NORTH 00°04'53" WEST 142.65 FEET TO THE SOUTH LINE OF CITY OF IDAHO FALLS ANNEXATION ORDINANCE NO. 1613; THENCE ALONG SAID SOUTH LINE THE FOLLOWING SIX (6) COURSES; (1) THENCE SOUTH 89°28'20" EAST 788.95 FEET TO A POINT OF TANGENCY OF A 867.06 FOOT RADIUS CURVE CONCAVE TO THE NORTHWEST OF WHICH RADIUS BEARS NORTH 00°31'43" EAST; (2) THENCE 351.93 FEET ALONG THE ARC OF SAID 867.06 FOOT RADIUS CURVE TO THE LEFT THROUGH A CENTRAL ANGLE OF 23°15'20" AND A LONG CHORD THAT BEARS NORTH 78°54'03" EAST 349.52 FEET TO A POINT OF REVERSE CURVATURE OF A 682.93 FOOT RADIUS CURVE CONCAVE TO THE SOUTHEAST OF WHICH RADIUS BEARS SOUTH 22°43'37" EAST; (3) THENCE 247.73 FEET ALONG THE ARC OF SAID 682.93 FOOT RADIUS CURVE TO THE RIGHT THROUGH A CENTRAL ANGLE OF 20°47'02" AND A LONG CHORD THAT BEARS NORTH 77°39'54" EAST 246.37 FEET TO A POINT OF COMPOUND CURVATURE OF A 20.00 FOOT RADIUS CURVE CONCAVE TO THE SOUTHWEST OF WHICH RADIUS BEARS SOUTH 01°56'35" EAST; (4) THENCE 32.10 FEET ALONG THE ARC OF SAID 20.00 FOOT RADIUS CURVE TO THE RIGHT THROUGH A CENTRAL ANGLE OF 91°58'26" AND A LONG CHORD THAT BEARS SOUTH 45°57'22" EAST 28.77 FEET TO A POINT OF COMPOUND CURVATURE OF A 500.00 FOOT RADIUS CURVE CONCAVE TO THE NORTHWEST OF WHICH RADIUS BEARS NORTH 89°58'08" WEST; (5) THENCE 92.47 FEET ALONG THE ARC OF SAID 500.00 FOOT RADIUS CURVE TO THE RIGHT THROUGH A CENTRAL ANGLE OF 10°35'45" AND A LONG CHORD THAT BEARS SOUTH 05°19'44" WEST 92.33 FEET; (6) THENCE NORTH 90°00'00" EAST 321.25 FEET TO THE WEST LINE OF CITY OF IDAHO FALLS ANNEXATION ORDINANCE NO. 1165; THENCE ALONG SAID WEST LINE, SOUTH 00°00'00" EAST 840.02 FEET; THENCE CONTINUING ALONG SAID WEST LINE, SOUTH 89°31'38" EAST 23.09 FEET; THENCE CONTINUING ALONG SAID WEST LINE, SOUTH 00°00'00" EAST 50.00 FEET TO THE NORTHEAST CORNER OF WARRANTY DEED, INSTRUMENT NO. 1493174; THENCE ALONG THE NORTH LINE OF SAID WARRANTY DEED, NORTH 89°31'38" WEST 5.00 FEET; THENCE ALONG THE WEST LINE OF SAID WARRANTY DEED, SOUTH 00°00'00" EAST 115.37 FEET TO THE NORTH LINE OF CITY OF IDAHO FALLS ANNEXATION ORDINANCE NO. 3231; THENCE ALONG SAID NORTH LINE, NORTH 89°31'35" WEST 155.10 FEET;

LEGAL DESCRIPTION CONTINUED:

THENCE ALONG THE WEST LINE OF SAID ORDINANCE NO. 3231, SOUTH 00°00'00" EAST 120.86 FEET TO THE NORTH LINE OF CITY OF IDAHO FALLS ANNEXATION ORDINANCE NO. 1715; THENCE ALONG THE NORTH LINE OF SAID ORDINANCE NO. 1715 THE FOLLOWING THREE (3) COURSES; (1) THENCE NORTH 89°22'22" WEST 439.48 FEET; (2) THENCE NORTH 89°57'09" WEST 939.95 FEET; (3) THENCE NORTH 89°41'57" WEST 561.71 FEET TO THE SOUTHEAST CORNER OF CITY OF IDAHO FALLS ANNEXATION ORDINANCE NO. 3231; THENCE ALONG THE EAST LINE OF SAID ORDINANCE NO. 3231, NORTH 00°56'27" EAST 193.92 FEET TO THE NORTH LINE OF SAID ORDINANCE NO. 3231; THENCE ALONG SAID NORTH LINE, NORTH 88°24'17" WEST 190.23 FEET TO THE EAST LINE OF CITY OF IDAHO FALLS ANNEXATION ORDINANCE NO. 1715; THENCE ALONG SAID EAST LINE, NORTH 00°06'57" WEST 201.56 FEET TO THE SOUTH LINE OF SAID ORDINANCE NO. 3231; THENCE ALONG SAID SOUTH LINE, SOUTH 89°35'00" EAST 171.73 FEET TO THE EAST LINE OF SAID ORDINANCE NO. 3231; THENCE ALONG SAID EAST LINE, NORTH 00°04'00" EAST 200.00 FEET TO THE NORTH LINE OF SAID ORDINANCE NO. 3231; THENCE ALONG SAID NORTH LINE, NORTH 89°35'00" WEST 172.37 FEET TO THE EAST LINE OF SAID ORDINANCE NO. 1715; THENCE ALONG SAID EAST LINE, NORTH 00°06'57" WEST 331.34 FEET TO THE **POINT OF BEGINNING**.

PARCEL CONTAINS 55.033 ACRES.

RECORDED WITH THE BONNEVILLE COUNTY RECORDERS OFFICE AS INSTRUMENT NO. _____

Curve Table

Curve #	Length	Radius	Delta	Chord Direction	Chord Length
C1	351.93'	867.06'	23°15'20"	N78°54'03"E	349.52'
C2	247.73'	682.93'	20°47'02"	N77°39'54"E	246.37'
C3	32.10'	20.00'	91°58'26"	S45°57'22"E	28.77'
C4	92.47'	500.00'	10°35'45"	S5°19'44"W	92.33'

PROFESSIONAL LAND SURVEYOR
REGISTERED
12457
2-1-22
STATE OF IDAHO
CHRISTOPHER ADAMS

HORROCKS ENGINEERS
2194 Snake River Parkway., Suite 205
Idaho Falls, ID 83402
(208) 522-1223
www.horrocks.com

OWNER:

CITY:

WARNING
0 1/2 1
IF THIS BAR DOES NOT MEASURE 1" THEN DRAWING IS NOT TO SCALE

APPLE DEVELOPMENT ANNEXATION

EXHIBIT

DRAWING INFO	
DATE	01/12/22
SCALE	1" = 200'
REV #	DATE

*SEE 2nd SHEET FOR LISTING
PROJ. NO: ID-LD-3839-21

1

PAGE 01

H:\2021\ID-LD-3839-21 Wasatch Group The Apple Development\Project Data\02 CAD\2.03 Sheet Files\Concepts & Exhibits\ID-LD-3839-21 ANNEX.dwg Melissa Knee 1/12/2022 4:08 PM

ORIGINAL

REASONED STATEMENT OF RELEVANT CRITERIA AND STANDARDS

ANNEXATION OF APPROXIMATELY 55.033 ACRES NORTH WEST ¼, OF SECTION 29, T 2N, R 38E, GENERALLY LOCATED NORTH OF E 25TH ST, EAST OF S HOLMES AVE, SOUTH OF E 17TH ST, WEST OF CRAIG ST.

WHEREAS, the applicant filed an application for annexation on September 29, 2021; and

WHEREAS, this matter came before the Idaho Falls Planning and Zoning Commission during a duly noticed public hearing on November 9, 2021; and

WHEREAS, this matter came before the Idaho Falls City Council during a duly noticed public hearing on February 24, 2022; and

WHEREAS, having reviewed the application, including all exhibits entered and having considered the issues presented:

I. RELEVANT CRITERIA AND STANDARDS

1. The City Council considered the request pursuant to City of Idaho Falls Comprehensive Plan, City of Idaho Falls Zoning Ordinance, City of Idaho Falls Subdivision Ordinance, the Local Land Use Planning Act, and other applicable development regulations.
2. The property is approximately 55.033 acres generally located North of E 25th St, east of S Holmes Ave, south of E 17th St, and west of Craig St.
3. This property is within the city's area of impact and surrounded by city limits.
4. The application is a Category "A" annexation.
5. The property is surrounded by city utilities.
6. The Comprehensive Plan designates this area as Commercial and Higher Density.
7. Idaho Falls Planning and Zoning Commission recommended approval of the annexation.

II. DECISION

Based on the above Reasoned Statement of Relevant Criteria, the City Council of the City of Idaho Falls approved the annexation as presented.

PASSED BY CITY COUNCIL OF THE CITY OF IDAHO FALLS

THIS _____ DAY OF _____, 2022

_____

Rebecca Casper - Mayor

Memorandum

File #: 21-393 **City Council Meeting**

FROM: Brad Cramer, Director
DATE: Monday, January 31, 2022
DEPARTMENT: Community Development Services

Subject

Public Hearing-Part 2 of 2 of the Annexation and Initial Zoning of LC, Limited Commercial and R2, Mixed Residential, Initial Zoning Ordinance and Reasoned Statement of Relevant Criteria and Standards, 55.033 Acres, NW ¼ of Section 29 Township 2 North, Range 38 East.

Council Action Desired

☒ Ordinance ☐ Resolution ☒ Public Hearing

☐ Other Action (Approval, Authorization, Ratification, etc.)

1. Assign a Comprehensive Plan Designation of "Commercial" and "Higher Density" and approve the Ordinance establishing the initial zoning for LC, Limited Commercial and R2, Mixed Residential as shown in the Ordinance exhibits under a suspension of the rules requiring three complete and separate readings and request that it be read by title and published by summary, that the City limits documents be amended to include the area annexed herewith, and that the City Planner be instructed to reflect said annexation, amendment to the Comprehensive Plan, and initial zoning on the Comprehensive Plan and Zoning Maps located in the Planning office (or consider the Ordinance on the first reading and that it be read by title, reject the Ordinance, or take other action deemed appropriate).

2. Approve the Reasoned Statement of Relevant Criteria and Standards for the Initial Zoning of LC, Limited Commercial R2, Mixed Residential and give authorization for the Mayor to execute the necessary documents (or take other action deemed appropriate).

Description, Background Information & Purpose

Attached is part 2 of 2 of the application for Annexation and Initial Zoning of LC, Limited Commercial and R2, Mixed Residential which includes the Initial Zoning Ordinance and Reasoned Statement of Relevant Criteria and Standards for 55.033 Acres, NW ¼ of Section 29 Township 2 North, Range 38 East. The Planning and Zoning Commission considered this item at its November 9, 2021, meeting and recommended approval of LC, Limited Commercial and R2, Mixed Residential by a unanimous vote. Staff concurs with this recommendation and recommends approval.

Alignment with City & Department Planning Objectives

☐ ☒ ☒ ☐ ☒ ☐ ☐ ☐

Consideration of initial zoning must be consistent with the principles of the Comprehensive Plan which includes many policies and goals related to Good Governance, Growth, Sustainability, and Livable Communities.

Interdepartmental Coordination

The initial zoning legal description has been reviewed by the Survey Division.

Fiscal Impact

NA

Legal Review

This application and ordinance have been reviewed by Legal pursuant to applicable law.

Annexation and Initial Zoning

ANNX21-016 Annex and Initial Zoning - LC, R2, R1 - Property behind Home Depot

Legend

- ANNX21-016
- City Limit

Overlays

- PT
- PT&T-1
- PUD
- T-1
- T-2

Zoning

- RE
- RP
- R1
- R2
- TN
- RMH
- R3
- R3A
- PB
- CC
- LC
- HC
- R&D
- LM
- I&M
- P

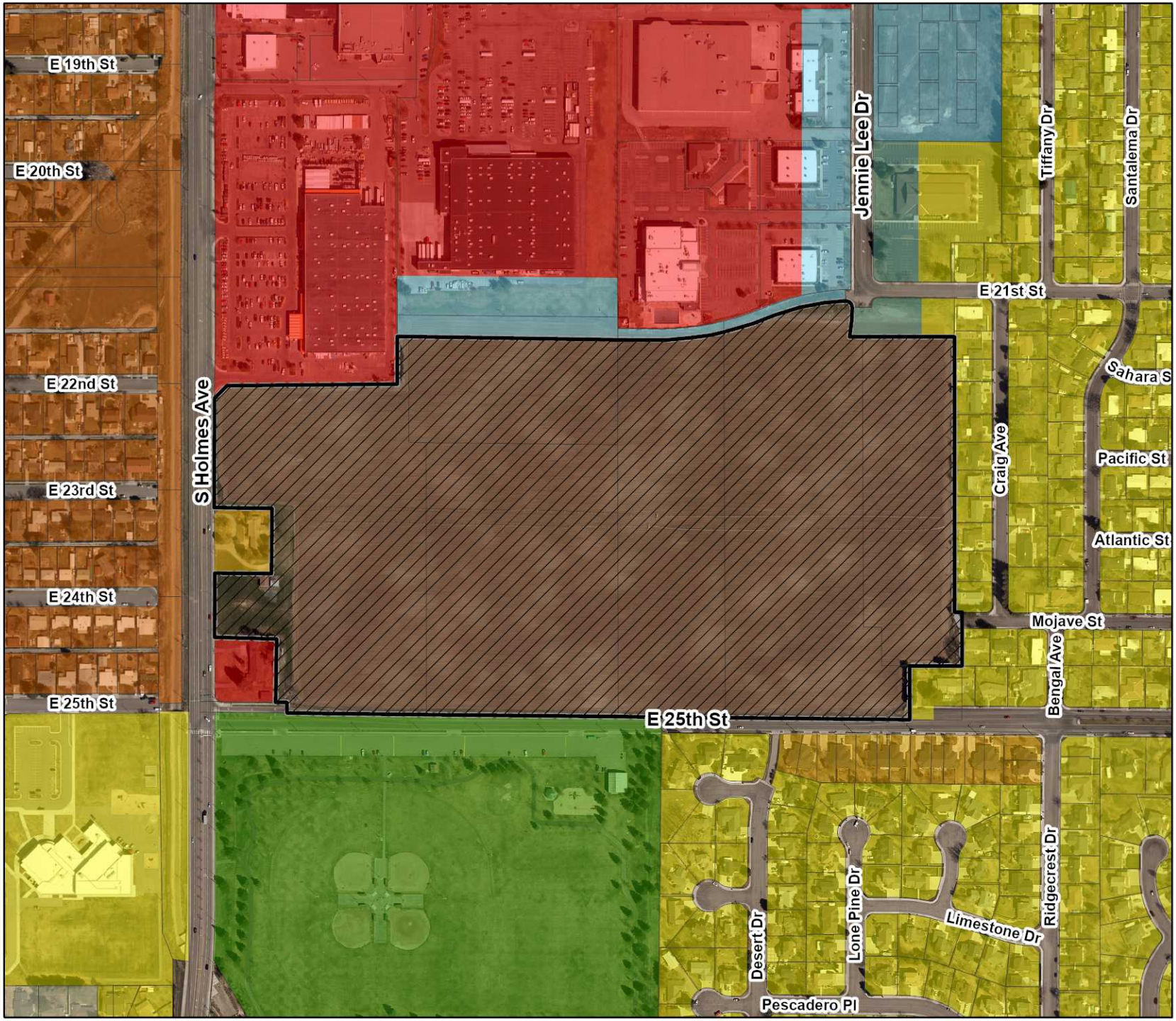

IDAHO FALLS

Planning Division
City Annex Building
680 Park Ave.
Idaho Falls, ID 83402
(208) 612-8276

N

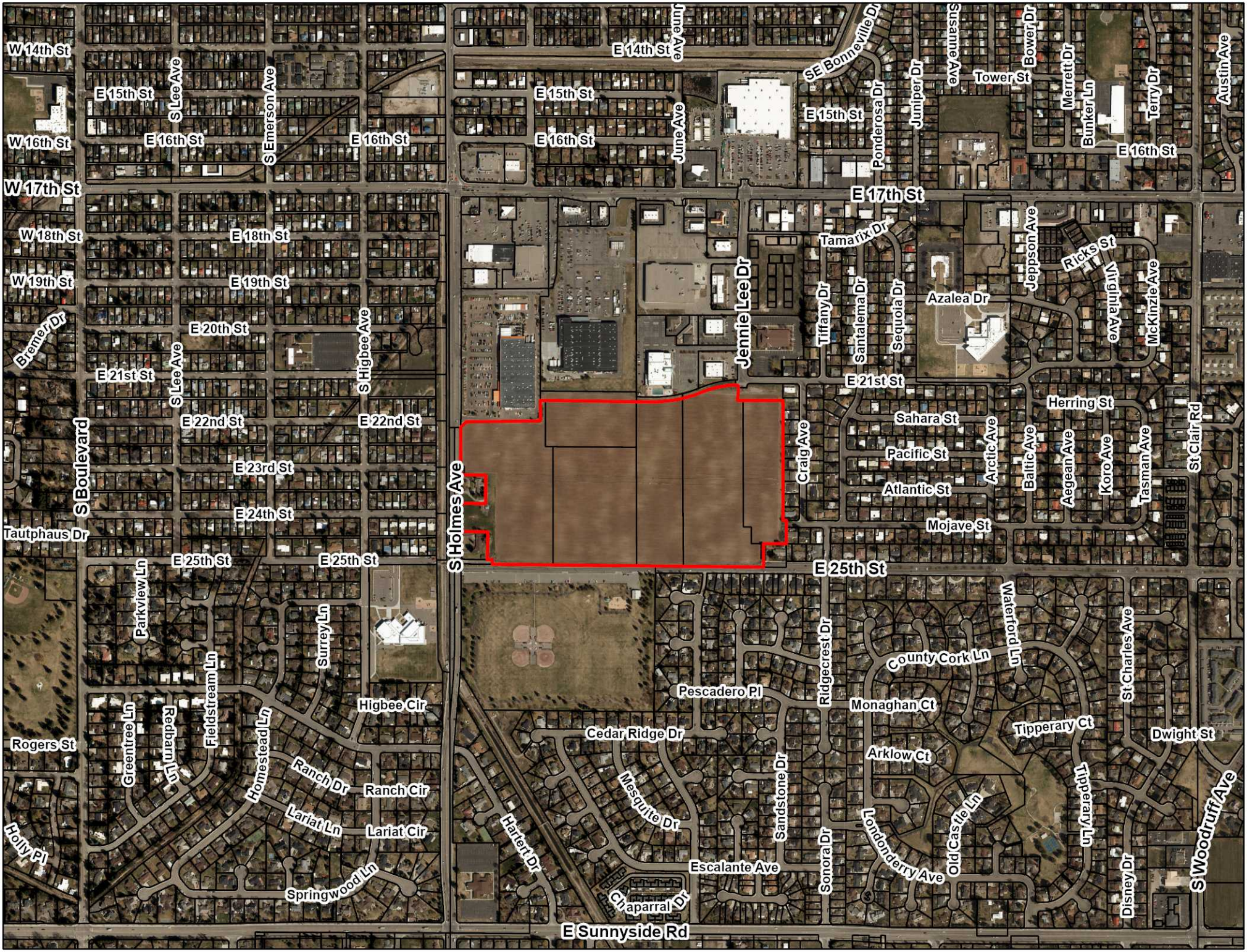
W 14th St
E 14th St
June Ave
SE Bonneville Dr
Susanne Ave
Bower Dr
Merrett Dr
Austin Ave
E 15th St
S Lee Ave
S Emerson Ave
Tower St
Bunker Ln
Terry Dr
W 16th St
E 16th St
Ponderosa Dr
Juniper Dr
W 17th St
E 17th St
W 18th St
E 18th St
Tamarix Dr
Jeppson Ave
Ricks St
W 19th St
E 19th St
Jennie Lee Dr
Tiffany Dr
Santalema Dr
Sequoia Dr
Azalea Dr
Virginia Ave
McKinzie Ave
Bremer Dr
E 20th St
S Higbee Ave
E 21st St
Herring St
E 22nd St
Sahara St
Craig Ave
Arctic Ave
Baltic Ave
Aegean Ave
Koro Ave
Tasman Ave
St Clair Rd
S Boulevard
E 23rd St
Pacific St
Atlantic St
S Holmes Ave
E 24th St
Mojave St
Tautphaus Dr
E 25th St
Parkview Ln
Surrey Ln
Waterford Ln
St Charles Ave
Ridgecrest Dr
County Cork Ln
Fieldstream Ln
Pescadero Pl
Higbee Cir
Monaghan Ct
Redbarn Ln
Greentree Ln
Cedar Ridge Dr
Tipperary Ct
Dwight St
Rogers St
Homestead Ln
Arklow Ct
Ranch Dr
Ranch Cir
Mesquite Dr
Sandstone Dr
Tipperary Ln
Lariat Ln
Lariat Cir
Hartert Dr
Londonderry Ave
Old Castle Ln
S Woodruff Ave
Holly Pl
Escalante Ave
Sonora Dr
Disney Dr
Springwood Ln
Chaparral Dr
E Sunnyside Rd

Annexation and Initial Zoning

ANNX21-016 Annex and Initial Zoning - LC, R2, R1 - Property behind Home Depot

- Estate
- Low Density
- Higher Density
- Greenbelt Mixed Uses
- Parks and Recreation
- Public Facilities and Open Spaces
- Commercial
- Employment Centers
- Medical Services Centers
- Higher Education Centers
- Planned Transition
- Highway-related industrial
- Railroad-related industrial

Comprehensive Plan

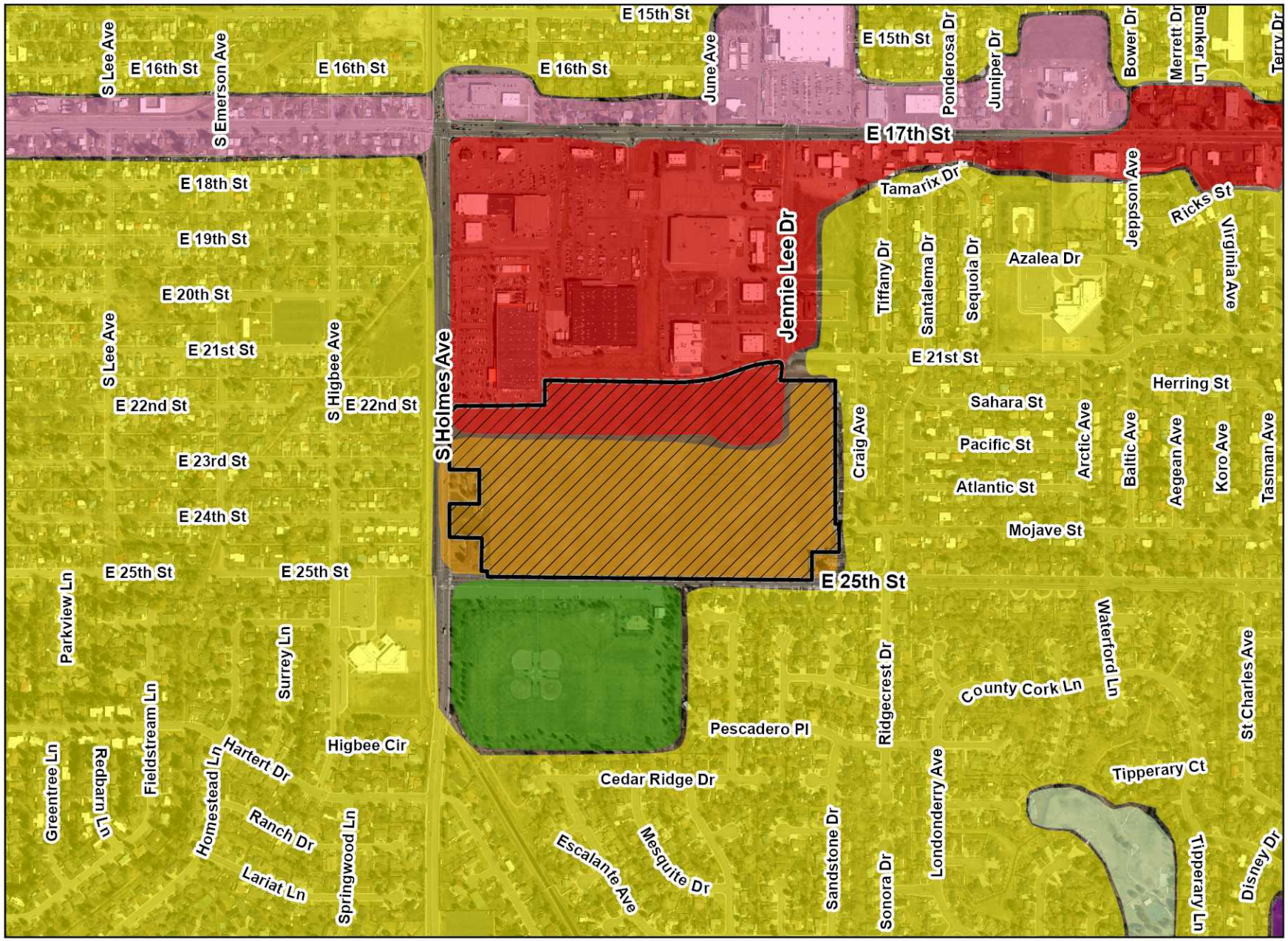

IDAHO FALLS

Planning Division
City Annex Building
680 Park Ave.
Idaho Falls, ID 83402
(208) 612-8276

N

ORDINANCE NO._____

AN ORDINANCE OF THE CITY OF IDAHO FALLS, IDAHO, A MUNICIPAL CORPORATION OF THE STATE OF IDAHO; PROVIDING FOR THE INITIAL ZONING OF APPROXIMATELY 55.033 ACRES DESCRIBED IN EXHIBIT A OF THIS ORDINANCE AS LC, LIMITED COMMERCIAL AND R2, MIXED RESIDENTIAL ZONE; AND PROVIDING SEVERABILITY, PUBLICATION BY SUMMARY, AND ESTABLISHING EFFECTIVE DATE.

WHEREAS, the proposed initial zoning district of lands described in Exhibit A is LC and R2 Zone for such annexed lands is consistent with the current City of Idaho Falls Comprehensive Plan Land use designation "Commercial" and "Higher Density"; and

WHEREAS, the proposed zoning district is consistent and compatible with the existing and surrounding zoning districts and is consistent with principles of the City of Idaho Falls Comprehensive Plan; and

WHEREAS, for consistency with the Comprehensive Plan, the Council desires to designate the lands within the area of annexation as "Commercial" and "Higher Density"; and

WHEREAS, Idaho Falls Planning and Zoning Commission held a duly noticed public hearing on November 9, 2021, and recommended approval of zoning the subject property to LC and R2 Zone; and

WHEREAS, the Council conducted a duly noticed public hearing and passed a motion to approve this zoning on February 24, 2022.

NOW THEREFORE, BE IT ORDAINED BY THE MAYOR AND COUNCIL OF THE CITY OF IDAHO FALLS, IDAHO, AS FOLLOWS:

SECTION 1: Comprehensive Plan Designation. The area described in Exhibit A are hereby given a Comprehensive Plan designation of Commercial and Higher Density.

SECTION 2: Legal Description. The lands described in Exhibit A are hereby zoned as LC and R2 Zone.

SECTION 3. Zoning. The property described in Section 1 of this Ordinance be and the same hereby is zoned "LC" and "R2" Zone and the City Planner is hereby ordered to make the necessary amendments to the official maps of the City of Idaho Falls which are on file at the City Planning Department Offices, 680 Park Avenue.

SECTION 4. Savings and Severability Clause. The provisions and parts of this Ordinance are intended to be severable. If any section, sentence, clause or phrase of this Ordinance should be held to be invalid or unconstitutional by a court of competent jurisdiction, such invalidity or

unconstitutionality shall not affect the validity or constitutionality of any other section, sentence, clause or phrase of this Ordinance.

SECTION 5. Publication. This Ordinance, or a summary thereof in compliance with Idaho Code, shall be published once in the official newspaper of the City, and shall take effect immediately upon its passage, approval, and publication.

SECTION 6. Effective Date. This Ordinance shall be in full force and effect from and after its passage, approval and publication.

PASSED by the City Council and APPROVED by the Mayor of the City of Idaho Falls, Idaho, this_____day of_____, 2022.

CITY OF IDAHO FALLS, IDAHO

_____
Rebecca L. Noah Casper, Mayor

ATTEST:

_____
Kathy Hampton, City Clerk

(SEAL)

STATE OF IDAHO)
) ss:
County of Bonneville)

I, KATHY HAMPTON, CITY CLERK OF THE CITY OF IDAHO FALLS, IDAHO, DO HEREBY CERTIFY:

> That the above and foregoing is a full, true and correct copy of the Ordinance entitled, "AN ORDINANCE OF THE CITY OF IDAHO FALLS, IDAHO, A MUNICIPAL CORPORATION OF THE STATE OF IDAHO; PROVIDING FOR THE INITIAL ZONING OF APPROXIMATELY 55.033 ACRES DESCRIBED IN SECTION 1 OF THIS ORDINANCE AS LC AND R2 ZONE; AND PROVIDING SEVERABILITY, PUBLICATION BY SUMMARY, AND ESTABLISHING EFFECTIVE DATE."

_____
Kathy Hampton, City Clerk

EXHIBIT A

LEGAL DESCRIPTION

Apple Development Annexation Parcel

A parcel of land located in the Northwest Quarter of Section 29, Township 2 North, Range 38 East, Boise Meridian, Bonneville County, Idaho more particularly described as follows:

Commencing at the Northwest corner of said Section 29, being marked by a 5/8" rebar with an aluminum cap as shown on Corner Perpetuation and Filing, Instrument No. 1638497; thence along the West line of said Section 29, South 00°06'57" East 1661.16 feet to the Southwest corner of City of Idaho Falls Annexation Ordinance No. 2244; thence along the south line of said Ordinance No. 2244, North 89°53'03" East 80.00 feet to the Point of Beginning; thence continuing along said South line, North 44°53'03" East 56.57 feet; thence continuing along said South line, North 89°53'03" East 520.93 feet to the Southeast corner of said Ordinance No. 2244; thence along the East line of said Ordinance No. 2244, North 00°04'53" West 142.65 feet to the South line of City of Idaho Falls Annexation Ordinance No. 1613; thence along said South line the following six (6) courses; (1) thence South 89°28'20" East 788.95 feet to a point of tangency of a 867.06 foot radius curve concave to the northwest of which radius bears North 00°31'43" East; (2) thence 351.93 feet along the arc of said 867.06 foot radius curve to the left through a central angle of 23°15'20" and a long chord that bears North 78°54'03" East 349.52 feet to a point of reverse curvature of a 682.93 foot radius curve concave to the southeast of which radius bears South 22°43'37" East; (3) thence 247.73 feet along the arc of said 682.93 foot radius curve to the right through a central angle of 20°47'02" and a long chord that bears North 77°39'54" East 246.37 feet to a point of compound curvature of a 20.00 foot radius curve concave to the southwest of which radius bears South 01°56'35" East; (4) thence 32.10 feet along the arc of said 20.00 foot radius curve to the right through a central angle of 91°58'26" and a long chord that bears South 45°57'22" East 28.77 feet to a point of compound curvature of a 500.00 foot radius curve concave to the northwest of which radius bears North 89°58'08" West; (5) thence 92.47 feet along the arc of said 500.00 foot radius curve to the right through a central angle of 10°35'45" and a long chord that bears South 05°19'44" West 92.33 feet; (6) thence North 90°00'00" East 321.25 feet to the West line of City of Idaho Falls Annexation Ordinance No. 1165; thence along said West line, South 00°00'00" East 840.02 feet; thence continuing along said West line, South 89°31'38" East 23.09 feet; thence continuing along said West line, South 00°00'00" East 50.00 feet to the Northeast corner of Warranty Deed, Instrument No. 1493174; thence along the North line of said Warranty Deed, North 89°31'38" West 5.00 feet; thence along the West line of said Warranty Deed, South 00°00'00" East 115.37 feet to the North line of City of Idaho Falls Annexation Ordinance No. 3231; thence along said North line, North 89°31'35" West 155.10 feet; thence along the West line of said Ordinance No. 3231, South 00°00'00" East 120.86 feet to the North line of City of Idaho Falls Annexation Ordinance No. 1715; thence along the North line of said Ordinance No. 1715 the following three (3) courses; (1) thence North 89°22'22" West 439.48 feet; (2) thence North 89°57'09" West 939.95 feet; (3) thence North 89°41'57" West 561.71 feet to the Southeast corner of City of Idaho Falls Annexation Ordinance No. 3231; thence along the East line of said Ordinance No. 3231, North 00°56'27" East 193.92 feet to the North line of said Ordinance No. 3231; thence along said North line, North 88°24'17" West 190.23 feet to the East line of City of Idaho Falls Annexation Ordinance No. 1715; thence along said East line, North 00°06'57" West 201.56 feet to the South line of said Ordinance No. 3231; thence along said South line, South 89°35'00" East 171.73 feet to the East line of said Ordinance No. 3231; thence along said East line, North 00°04'00" East 200.00 feet to the North line of said Ordinance No. 3231; thence along said North line, North 89°35'00" West 172.37 feet to the East line of said Ordinance No. 1715; thence along said East line, North 00°06'57" West 331.34 feet to the Point of Beginning.

Parcel contains 55.033 acres.

Submitted by:

Eng/Survey Firm Name: Horrocks Engineers, Inc. / Creek Hollow & Associates, Inc.

Contact Name: Leith Sheets, PE / Chris Adams, PLS

Phone Number: 208-522-1223 / 208-709-3113

Email: leiths@horrocks.com / adams@creekhollowinc.com

PLS Seal: PROFESSIONAL LAND SURVEYOR REGISTERED 12457 2-1-22 STATE OF IDAHO CHRISTOPHER ADAMS

Page____ of____

ORIGINAL

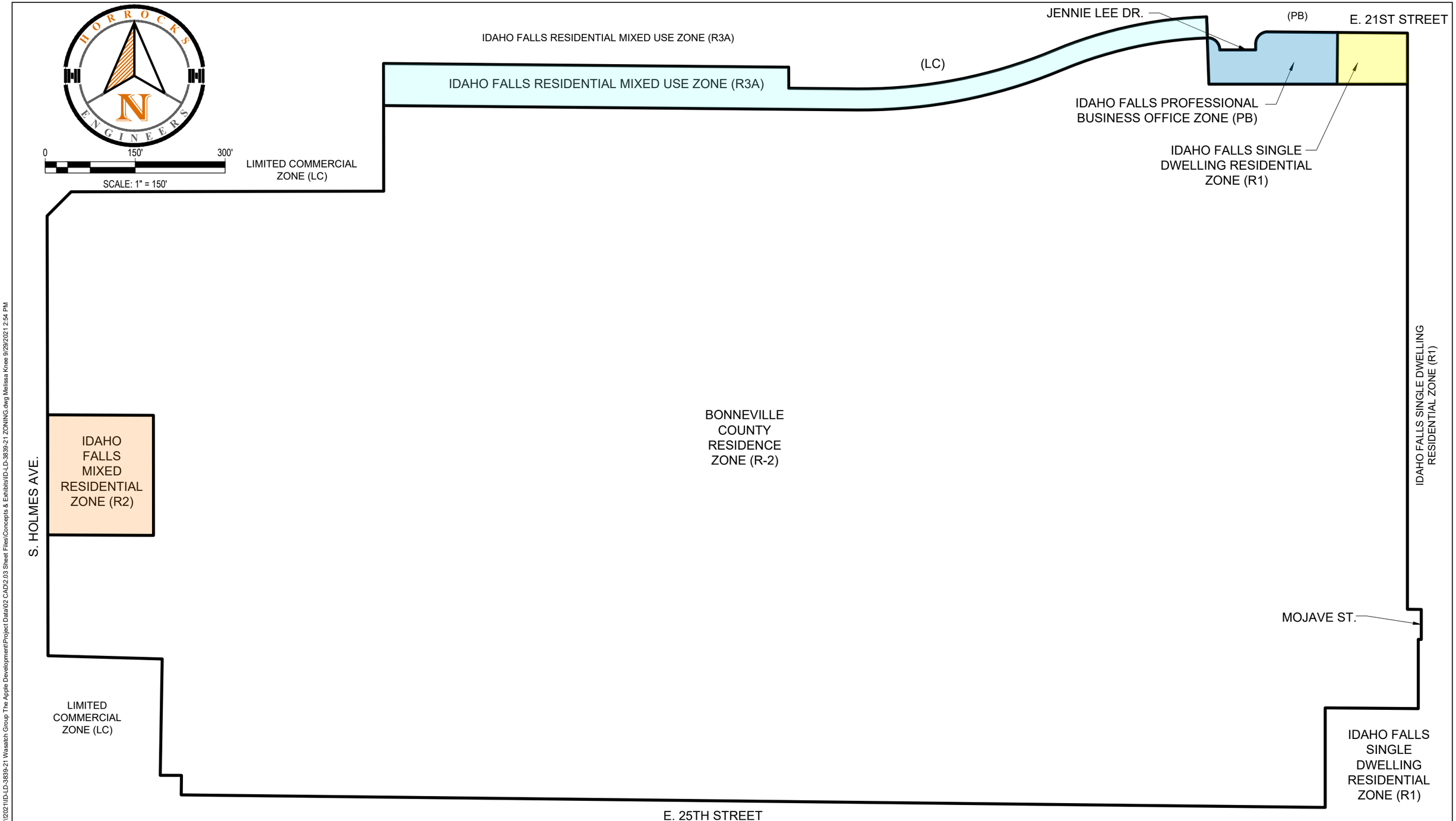

H:\2021\ID-LD-3839-21 Wasatch Group The Apple Development\Project Data\02 CAD\2.03 Sheet Files\Concepts & Exhibits\ID-LD-3839-21 ZONING.dwg Melissa Knee 9/29/2021 2:54 PM

HORROCKS ENGINEERS
2194 Snake River Parkway., Suite 205
Idaho Falls, ID 83402
(208) 522-1223
www.horrocks.com

OWNER:

CITY:

WARNING
0 1/2 1
IF THIS BAR DOES NOT MEASURE 1" THEN DRAWING IS NOT TO SCALE

APPLE DEVELOPMENT EXISTING ZONING

EXHIBIT

DRAWING INFO	
DATE	09/29/21
SCALE	1" = 150'
REV #	DATE
*SEE 2nd SHEET FOR LISTING	
PROJ. NO:	ID-LD-3839-21

1

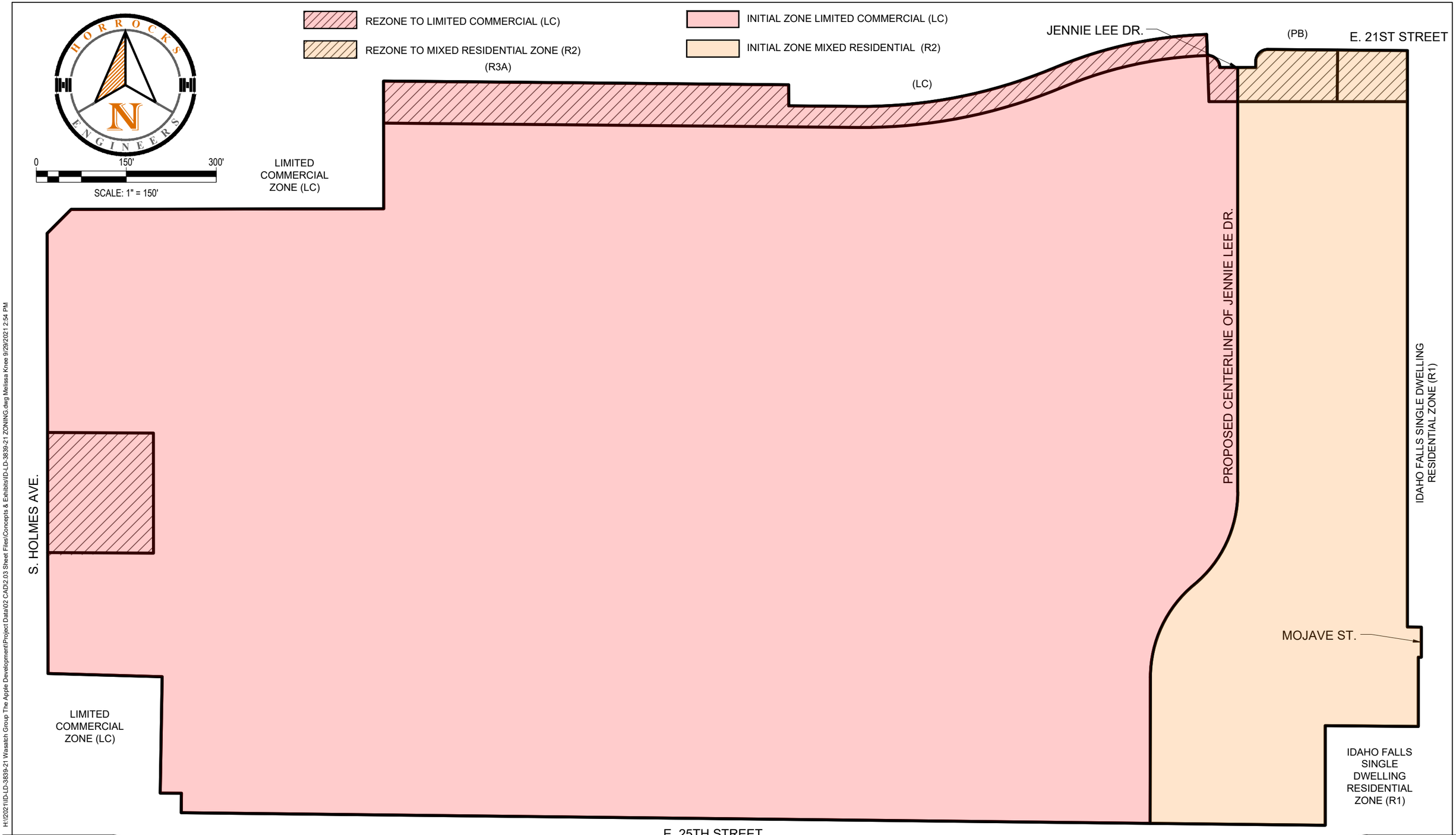

H:\2022\ID-LD-3839-21 Wasatch Group The Apple Development\Project Data\02 CAD\2.03 Sheet Files\Concepts & Exhibits\ID-LD-3839-21 ZONING.dwg Melissa Knee 9/29/2021 2:54 PM

HORROCKS ENGINEERS
2194 Snake River Parkway., Suite 205
Idaho Falls, ID 83402
(208) 522-1223
www.horrocks.com

OWNER:

CITY:

WARNING
0 1/2 1
IF THIS BAR DOES NOT MEASURE 1" THEN DRAWING IS NOT TO SCALE

APPLE DEVELOPMENT PROPOSED ZONING

EXHIBIT

DRAWING INFO	
DATE	09/29/21
SCALE	1" = 150'
REV #	DATE

*SEE 2nd SHEET FOR LISTING
PROJ. NO: ID-LD-3839-21

2

REASONED STATEMENT OF RELEVANT CRITERIA AND STANDARDS

INITIAL ZONING OF LC, LIMITED COMMERCIAL, R2, MIXED RESIDENTIAL, AND APPROXIMATELY 55.033 ACRES IN THE NW ¼ OF SECTION 29, T 2N, R 38E, GENERALLY LOCATED NORTH OF E 25TH ST, EAST OF S HOLMES AVE, SOUTH OF E 17TH ST, WEST OF CRAIG ST.

WHEREAS, the applicant filed an application for annexation on September 29, 2021; and

WHEREAS, this matter came before the Idaho Falls Planning and Zoning Commission during a duly noticed public hearing on November 9, 2021; and

WHEREAS, this matter came before the Idaho Falls City Council during a duly noticed public hearing on February 24, 2022; and

WHEREAS, having reviewed the application, including all exhibits entered and having considered the issues presented:

I. RELEVANT CRITERIA AND STANDARDS

1. The City Council considered the request pursuant to City of Idaho Falls Comprehensive Plan, City of Idaho Falls Zoning Ordinance, City of Idaho Falls Subdivision Ordinance, the Local Land Use Planning Act, and other applicable development regulations.
2. The property is approximately 55.033 acres generally located North of E 25th St, East of S Holmes Ave, South of E 17th St, and West of Craig Street.
3. The Comprehensive Plan designates this area as Commercial and Higher Density.
4. The proposed zoning of LC and R2 is consistent with the Comprehensive Plan map and policies and existing zoning and land uses in the area.
5. Idaho Falls Planning and Zoning Commission recommended approval of zoning the property to LC and R2.

II. DECISION

Based on the above Reasoned Statement of Relevant Criteria, the City Council of the City of Idaho Falls approved the initial zoning as presented.

PASSED BY CITY COUNCIL OF THE CITY OF IDAHO FALLS

THIS _____ DAY OF _____, 2022

_____

Rebecca Casper - Mayor

Memorandum

File #: 21-395 **City Council Meeting**

FROM: Brad Cramer, Director
DATE: Monday, January 31, 2022
DEPARTMENT: Community Development Services

Subject

Public Hearing-Rezone from R3A, Residential Mixed Use, R1, Single Dwelling Residential, PB, Professional Business Office and R2, Mixed Residential to LC, Limited Commercial and R2, Mixed Residential, Zoning Ordinance and Reasoned Statement of Relevant Criteria and Standards, Approximately 3.079 acres, SW ¼, NW ¼ of Section 29, Township 2 North, Range 38 East.

Council Action Desired

☒ Ordinance ☐ Resolution ☒ Public Hearing

☐ Other Action (Approval, Authorization, Ratification, etc.)

1. Approve the Ordinance Rezoning approximately 3.079 acres, SW ¼, NW ¼ of Section 29, Township 2 North, Range 38 East from R3A, R1, PB and R2 to LC and R2, under suspension of the rules requiring three complete and separate readings and request that it be read by title and published by summary (or consider the Ordinance on the first reading and that it be read by title, reject the Ordinance, or take other action deemed appropriate).

2. Approve the Reasoned Statement of Relevant Criteria and Standards for the Rezone from R3A, R1, PB and R2 to LC and R2 and give authorization for the Mayor to execute the necessary documents (or take other action as deemed appropriate).

Description, Background Information & Purpose

Attached is the application for Rezoning from R3A, R1, PB and R2 to LC and R2, Zoning Ordinance, and Reasoned Statement of Relevant Criteria and Standards for approximately 3.079 acres, SW ¼, NW ¼ of Section 29, Township 2 North, Range 38 East. The Planning and Zoning Commission considered this item at its November 9, 2021, meeting and recommended to the Mayor and City Council approval of the zone change with a unanimous vote. Staff concurs with this recommendation.

Alignment with City & Department Planning Objectives

☐ ☒ ☒ ☐ ☒ ☐ ☒ ☐

Consideration of the rezone must be done consistent with the principles of the Comprehensive Plan, which includes many policies and goals related to Good Governance, Growth, Sustainability, and Livable Communities.

Interdepartmental Coordination

The Rezone was reviewed by staff from the Planning Division.

Fiscal Impact

NA

Legal Review

The application and ordinance have been reviewed by the City Attorney pursuant to applicable law.

Rezone

RZON21-018 - Rezone from R3A, R2, R1 and PB to LC, R2

Legend

- RZON21-018
- City Limit

Overlays

- PT
- PT&T-1
- PUD
- T-1
- T-2

Zoning

- RE
- RP
- R1
- R2
- TN
- RMH
- R3
- R3A
- PB
- CC
- LC
- HC
- R&D
- LM
- I&M
- P

IDAHO FALLS

Planning Division
City Annex Building
680 Park Ave.
Idaho Falls, ID 83402
(208) 612-8276

N

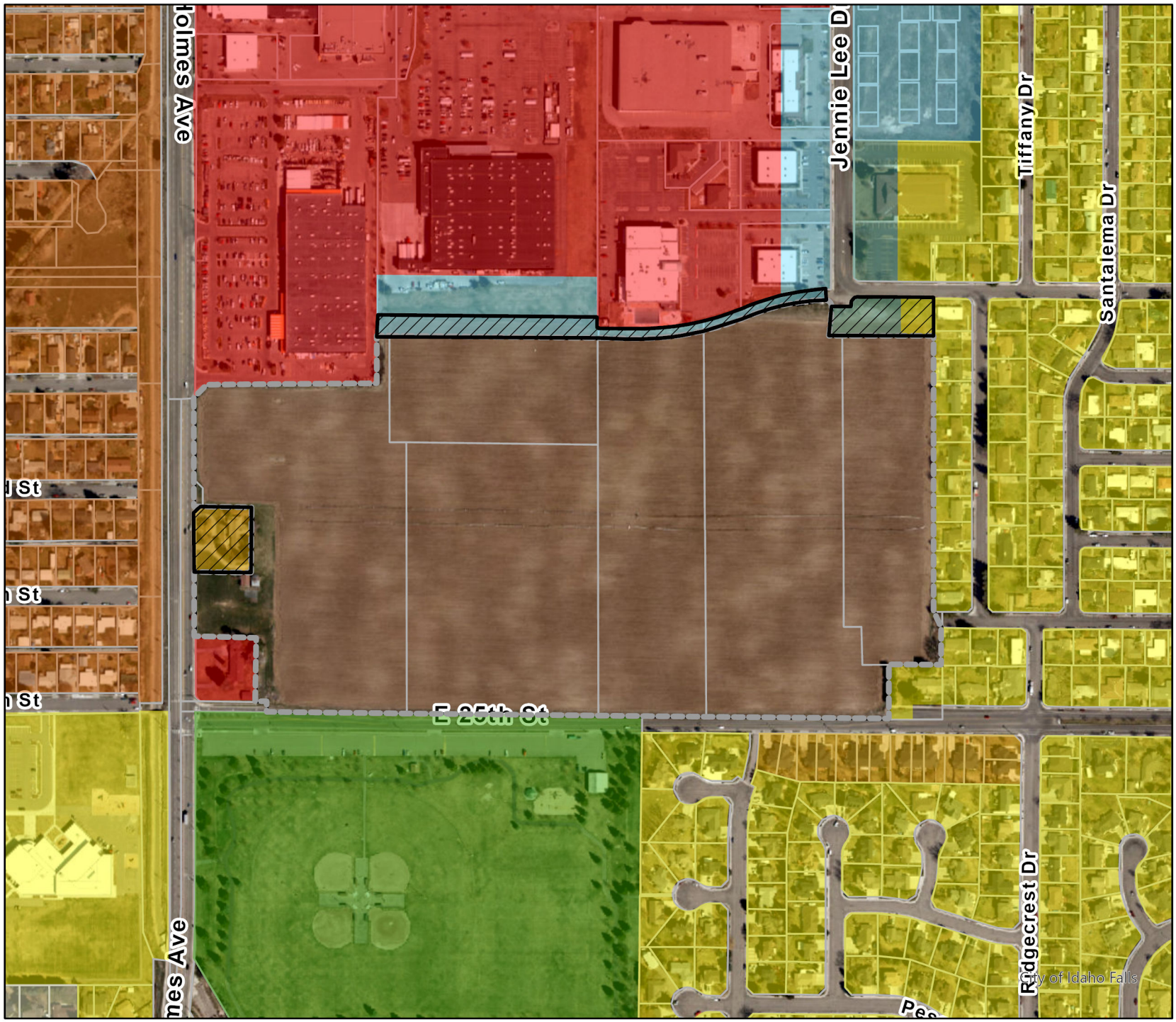

Maple St
W 14th St
E 15th St
W 16th St
E 16th St
W 17th St
W 18th St
E 18th St
W 19th St
E 19th St
E 20th St
Bremer Dr
E 21st St
S Boulevard
E 22nd St
E 23rd St
E 24th St
Tautphaus Dr
E 25th St
Parkview Ln
Rogers St
Greentree Ln
Redbank Ln
Fieldstream Ln
Holly Pl
Homestead Ln
Surrey Ln
Higbee Cir
Ranch Dr
Ranch Cir
Lariat Ln
Lariat Cir
Springwood Ln
S Lee Ave
S Emerson Ave
S Higbee Ave
S Holmes Ave
Cranmer Ave
Taylor Ave
E 13th St
E 14th St
Spratt Ave
June Ave
Hartert Dr
Mesquite Dr
Cedar Ridge Dr
Pescadero Pl
Escalante Ave
Chaparral Dr
Jennie Lee Dr
SE Bonneville Dr
Ponderosa Dr
Juniper Dr
Susanne Ave
Cathryn Ave
Bower Dr
Tower St
Merrett Dr
Bunker Ln
Terry Dr
Austin Ave
E 17th St
Tamarix Dr
Tiffany Dr
Santalema Dr
Sequoia Dr
Azalea Dr
Jeppson Ave
Ricks St
Virginia Ave
McKinzie Ave
Herring St
Sahara St
Pacific St
Atlantic St
Mojave St
Craig Ave
Arctic Ave
Baltic Ave
Aegean Ave
Koro Ave
Tasman Ave
St Clair Rd
Sandstone Dr
Sonora Dr
Ridgecrest Dr
Monaghan Ct
Arklow Ct
Londonderry Ave
Old Castle Ln
County Cork Ln
Waterford Ln
Tipperary Ct
Tipperary Ln
St Charles Ave
Disney Dr
S Woodruff Ave

Rezone

RZON21-018 Rezone from R3A, R2, R1 and PB to LC, R2

- Estate
- Low Density
- Higher Density
- Greenbelt Mixed Uses
- Parks and Recreation
- Public Facilities and Open Spaces
- Commercial
- Employment Centers
- Medical Services Centers
- Higher Education Centers
- Planned Transition
- Highway-related industrial
- Railroad-related industrial

Comprehensive Plan

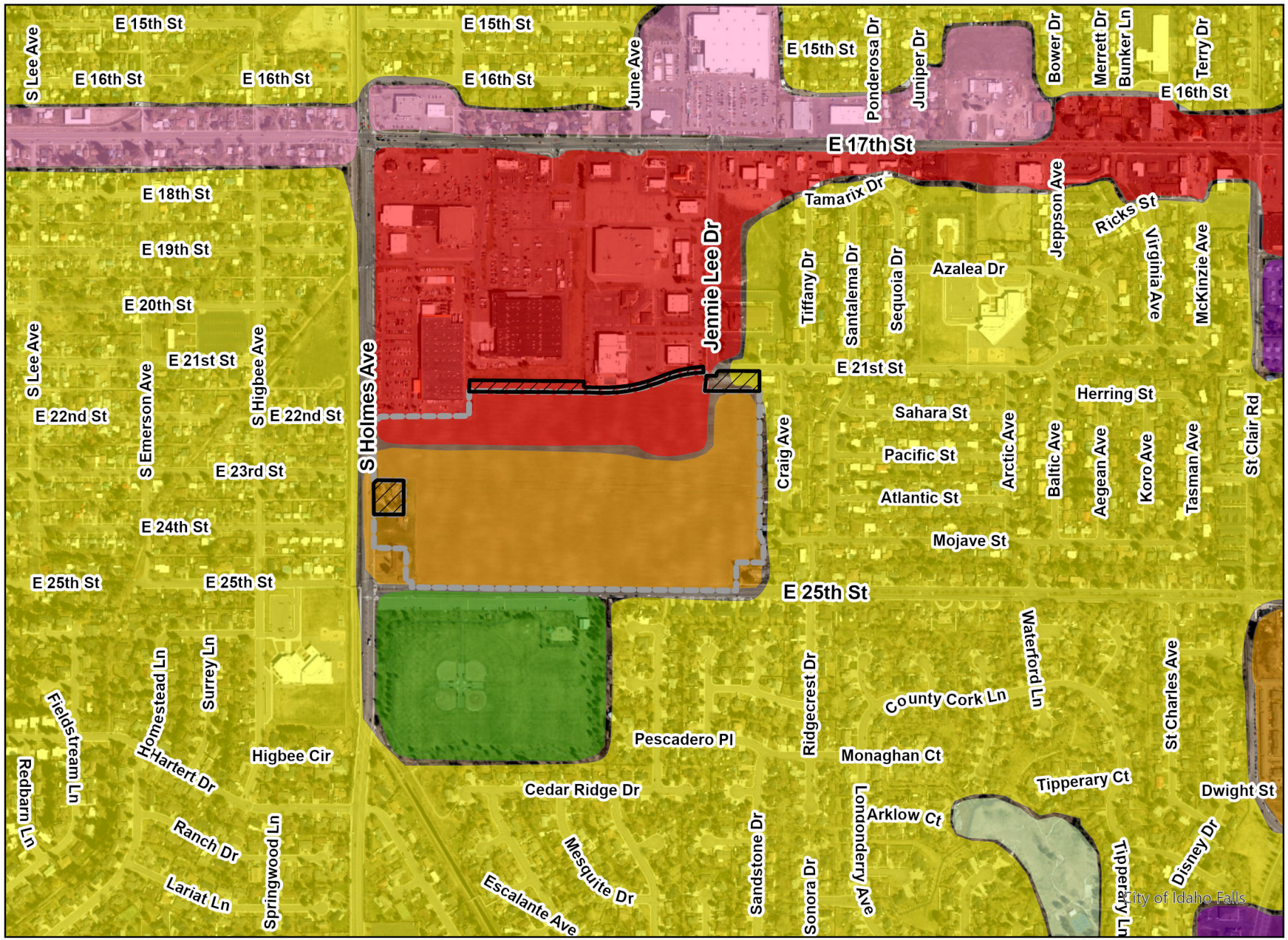

IDAHO FALLS

Planning Division
City Annex Building
680 Park Ave.
Idaho Falls, ID 83402
(208) 612-8276

N

STAFF REPORT

Rezone from R2, Mixed Residential to LC, Limited Commercial R3A, Residential Mixed Use to LC, Limited Commercial, PB, Proffesional Business Office to R2, Mixed Residential and R1, Single Dwelling Residential to R2, Mixed Residential, Approximately 3.079 total acres, SW ¼, NW ¼, Sec 29, T 2N, R 38E

February 10, 2022

IDAHO FALLS

Community Development Services

Applicant: Horrocks Engineers

Project Manager: Naysha Foster

Location: north of E 25th St, east of S Holmes, south of E 17th St, west of Craig St.

Size: 3.079 total acres

Zoning:
North: LC
South: P, R1, & R2
East: TN
West: R1

Existing Zoning: R3A, PB, R1 & R2
Proposed Zoning: LC & R2

Existing Land Uses:
Site: Vacant
North: Commercial
South: Park & Residential
East: Residential
West: Residential

Future Land Use Map: Commercial & Higher Density

Attachments:
1. Comprehensive Plan Policies
2. Zoning Information
3. Maps and Aerial Photos

Requested Action: To approve the rezone of approximately 0.818 acres from R2 to LC, 1.658 acres from R3A to LC, 0.379 acres from PB to R2, and 0.224 acres from R1 to R2.

History: The property along the north was annexed in October of 1979. The property to the west was annexed in December of 2018. None of these properties have been platted at this point. Properties will need to be platted prior to development.

Staff Comments: The property is located southeast from Home Depot, along S Holmes and E 25th. Holmes is a principal arterial and E 25th is a Collector. The property is currently farmed. Water, sewer, and power are easily accessible from various locations. The LC is a commercial zone that allows smaller scale retail and other services which supply the daily needs of residents. This zone is usually located on major streets contiguous to residential uses making it easily accessible for pedestrian to walk or use non-motorized vehicles. The LC Zone also allows a wide variety dwelling types under the R3A requirements, allowing up to 35 units per net acre. The R2 is a mixed residential use allowing up to 4 attached units per structure. R2 is a medium density zone allowing 17 units per net acre. This zone is also located near commercial services.

Staff Recommendation: Staff and the Planning and Zoning Commission recommend approval of the proposed rezone from R2, R3A, PB, and R1 to LC and R2 as it is consistent with the policies of the Comprehensive Plan and the surrounding zoning and uses in the area.

Rezoning Considerations: Because the comprehensive plan provides only general guidance for zoning decisions, the Planning Commission shall also take the following considerations into account:

Criteria for Rezoning Section 11-6-5(I) of Ordinance	**Staff Comment**
The Zoning is consistent with the principles of City's adopted Comprehensive Plan, as required by Idaho Code.	The zoning is consistent with the policies of the Comprehensive Plan.
The potential for traffic congestion as a result of development or changing land use in the area and need that may be created for wider streets, additional turning lanes and signals, and other transportation improvements.	A change in zoning designation for the 3.079 total acres will not affect the potential traffic generation in the area.
The potential for exceeding the capacity of existing public services, including, but not limited to: schools, public safety services, emergency medical services, solid waste collection and disposal, water and sewer services, other public utilities, and parks and recreational services.	Staff would anticipate little to no impact to the capacity of existing public services as a result of the zone change.
The potential for nuisances or health and safety hazards that could have an adverse effect on adjoining properties.	Staff is not aware of any potential nuisances or health and safety hazards as a result of the zone change.
Recent changes in land use on adjoining parcels or in the neighborhood of the proposed zoning map amendment.	Property north on Jennie Lee was changed to R3A and is being developed as higher density residential. The property to the south is pending annexation and mixed residential and commercial zoning designations.
Zoning Application Questions:	**Applicant's response:**
Explain how the proposed change is in accordance with the City of Idaho Falls Comprehensive Plan.	Adds commercial and residential zones adjacent to existing commercial and residential zones.
What changes have occurred in the area to justify the request for rezone?	Annexation
Are there existing land uses in the area similar to the proposed use?	Yes
Is the site large enough to accommodate required access, parking, landscaping, etc. for the proposed use?	Yes

Comprehensive Plan Policies:

Residential development should reflect the economic and social diversity. (p 39)

Higher density housing should be located closer to service areas and those streets designed to move traffic, such as arterial streets and collectors, with access only to the collector street. (pg. 39)

Plan for different commercial functions. (p. 46)

Develop nodes of clustered development. (p.67)

Encourage development in areas served by public utilities or where extensions of facilities are least costly. (p. 67)

Zoning:

11-3-3: PURPOSE OF RESIDENTIAL ZONES
R2 Mixed Residential Zone. This zone provides a residential zone characterized by smaller lots and dwellings, more compact and denser residential development; and higher volumes of vehicular and pedestrian traffi c than are characteristic of the RE, RP and R1 Zones. The principal uses permitted in the R2 Zone shall be one (1), two (2), three (3), and four (4) dwelling units. This zone is also generally located near limited commercial services that provide daily household needs.

11-3-5: PURPOSE OF COMMERCIAL ZONES
LC Limited Commercial Zone. This zone provides a commercial zone for retail and service uses which supply the daily household needs of the City's residents. This Zone is usually located on major streets contiguous to residential uses. This zone is characterized by smaller scale commercial uses which are easily accessible by pedestrians and non-motorized vehicles from the surrounding residential neighborhoods, although larger scale developments such as big-box stores may still serve as anchors. Connectivity is provided with walkways that provide access to and through the development site. Parking for vehicles is understated by the use of landscaping, location, and provision of pedestrian walkways to the businesses.

11-2-3: ALLOWED USES IN RESIDENTIAL ZONES.

Table 11-2-1: Allowed Uses in Residential Zones

P = permitted use. C1 = administrative conditional use. C2 = Planning Commission conditional use. C3 = City Council conditional use. A blank denotes a use that is not allowed in that zone.

*Indicates uses that are subject to specific land use provisions set forth in the Standards for Allowed Land Uses Section of this Chapter.

	Low Density Residential			Medium Density Residential			High Density Residential	
Proposed Land Use Classification	**RE**	**RP**	**R1**	**R2**	**TN**	**RMH**	**R3**	**R3A**
Accessory Use	P	P	P	P	P	P	P	P
Agriculture*	P							
Animal Care Clinic					P*			P
Artist Studio					P*			
Bed and Breakfast*								P
Boarding /Rooming House							P	P
Day Care, Center*			C_2	P	P		P	P
Day Care, Group*	C_1		C_1	P	P	C_1	P	P
Day Care, Home	C_1		C_1	P	P	C_1	P	P
Dwelling, Accessory Unit*	P			P	P		P	P
Dwelling, Multi-Unit*				P*	P		P	P
Dwelling, Multi-Unit Attached*				P	P		P	P
Dwelling, Single Unit Attached*			P	P	P	P	P	P
Dwelling, Single Unit Detached	P	P	P	P	P	P	P	P
Dwelling, Two Unit				P	P		P	P
Eating Establishment, Limited					P*			P
Financial Institutions					P*			P
Food Processing, Small Scale					P*			
Food Store					P*			
Fuel Station					P*			
Health Care and Social Services					P*			P
Home Occupation*	C_1		C_1	C_1	C_1	C_1	C_1	C_1
Information Technology								P
Laundry and Dry Cleaning					P*			P
Live-Work*					C_1			P
Manufactured Home*	P	P	P	P	P	P	P	P
Mobile Home Park*						C_2		C_2
Mortuary								P
Park and Recreation Facility*	P	P	P	P	P	P	P	P
Parking Facility								P
Personal Service					P*			P
Planned Unit Development*	C_3	C_3	C_3	C_3		C_3	C_3	C_3
Professional Service								P
Public Service Facility*	C_2	C_2	C_2	C_2	C_2	C_2	C_2	C_2
Public Service Facility, Limited	P	P	P	P	P	P	P	P
Public Service Use								P

Recreational Vehicle Park*						C_2		
Proposed Land Use Classification	**RE**	**RP**	**R1**	**R2**	**TN**	**RMH**	**R3**	**R3A**
Religious Institution*	C_2	C_2	C_2	C_2	C_2	C_2	C_2	C_2
Residential Care Facility							P	P
Retail					P*			C_2
School	C_2	C_2	C_2	C_2	C_2	C_2	C_2	C_2
Short Term Rental*	P	P	P	P	P	P	P	P
Transite Station								P

(Ord. 3218, 9-13-18) (Ord. 3358, 12-10-20)

11-2-4: ALLOWED USES IN COMMERCIAL ZONES.

Table 11-2-2: Allowed Uses in Commercial Zones

P = permitted use. C1 = administrative conditional use. C2 = Planning Commission conditional use. C3 = City Council conditional use. A blank denotes a use that is not allowed in that zone.

*Indicates uses that are subject to specific land use provisions set forth in the Standards for Allowed Land Uses Section of this Chapter.

	Commercial				
Proposed Land Use Classification	**PB**	**CC**	**LC**	**HC**	**PT**
Accessory Use*	P	P	P	P	P
Accessory Use, Fuel Station*		P	P	P	
Accessory Use, Storage Yard*		P	P	P	
Amusement Center, Indoor		P	P	P	
Amusement Center, Indoor Shooting Range*		P	P	P	
Amusement Center, Outdoor*				P	
Animal Care Clinic*	P	P	P	P	
Animal Care Facility*				P	
Bed and Breakfast*		P	P		P
Boarding /Rooming House		P	P		P
Building Material, Garden and Farm Supplies			P	P	
Cemetery*		C_2	C_2	C_2	
Club*		P	P	P	
Communication Facility		P	P	P	
Day Care, all Types*	P	P	P	P	P
Drinking Establishment		P		P	
Drive-through Establishment *	P*	P	P	P	P
Dwelling, Accessory Unit *		P	P	P	P
Dwelling, Multi-Unit*		P	P		P
Dwelling, Multi-Unit Attached*		P	P		P
Dwelling, Single Unit Atached*			P		
Dwelling, Single Unit Detached			P		
Dwelling, Two Unit			P		P
Eating Establishment		P	P	P	P
Eating Establishment, Limited	P	P	P	P	P

Proposed Land Use Classification	RE	RP	R1	R2	TN	RMH	R3	R3A
Religious Institution*	C_2	C_2	C_2	C_2	C_2	C_2	C_2	C_2
Residential Care Facility							P	P
Retail					P*			C_2
School	C_2	C_2	C_2	C_2	C_2	C_2	C_2	C_2
Short Term Rental*	P	P	P	P	P	P	P	P
Transite Station								P

(Ord. 3218, 9-13-18)

11-2-4: ALLOWED USES IN COMMERCIAL ZONES.

Table 11-2-2: Allowed Uses in Commercial Zones

P = permitted use. C1 = administrative conditional use. C2 = Planning Commission conditional use. C3 = City Council conditional use. A blank denotes a use that is not allowed in that zone.

*Indicates uses that are subject to specific land use provisions set forth in the Standards for Allowed Land Uses Section of this Chapter.

	Commercial				
Proposed Land Use Classification	PB	CC	LC	HC	PT
Accessory Use*	P	P	P	P	P
Accessory Use, Fuel Station*		P	P	P	
Accessory Use, Storage Yard*		P	P	P	
Amusement Center, Indoor		P	P	P	
Amusement Center, Indoor Shooting Range*		P	P	P	
Amusement Center, Outdoor*				P	
Animal Care Clinic*	P	P	P	P	
Animal Care Facility*				P	
Bed and Breakfast*		P	P		P
Boarding /Rooming House		P	P		P
Building Material, Garden and Farm Supplies			P	P	
Cemetery*		C_2	C_2	C_2	
Club*		P	P	P	
Communication Facility		P	P	P	
Day Care, all Types*	P	P	P	P	P
Drinking Establishment		P		P	
Drive-through Establishment *	P*	P	P	P	P
Dwelling, Accessory Unit *		P	P	P	P
Dwelling, Multi-Unit*		P	P		P
Dwelling, Single Unit Atached*			P		
Dwelling, Single Unit Detached			P		
Dwelling, Two Unit			P		P
Eating Establishment		P	P	P	P
Eating Establishment, Limited	P	P	P	P	P
Financial Institutions	P	P	P	P	P
Entertainment and Cultural Facilities	P	P	P	P	P

Proposed Land Use Classification	PB	CC	LC	HC	PT
Equipment Sales, Rental and Services			P	P	
Food Processing, Small Scale				P	
Food Store		P	P	P	P
Health Care and Social Services	P	P	P	P	P
Higher Education Center		P	P	P	P
Home Occupation*	P	P	P	P	P
Hospital*	C_2	C_2	C_2	C_2	C_2
Industry, Craftsman	P	P	P	P	
Industry, Light		P		P	
Information Technology	P	P	P	P	P
Laundry and Dry Cleaning		P			P
Live-Work*	C_2	P	P	P	P
Lodging Facility		P	P	P	P
Mortuary				P	P
Parking Facility		P	P	P	P
Pawn Shop		P			
Personal Service	P	P	P	P	P
Professional Service	P	P	P	P	P
Planned Unit Development*		C_3	C_3		C_3
Public Service Facility*	C_2	C_2	C_2	C_2	C_2
Public Service Facility, Limited	P	P	P	P	P
Public Service Use	P	P	P	P	P
Recreation Vehicle Park*				P	
Religious Institution*		P	P	P	P
Residential Care Facility	P	P	P	P	P
Retail		P	P	P	P
School		P	P	P	P
Short Term Rental*		P	P		P
Fuel Station		P	P	P	
Fuel Station, Super		C_2	P	P	
Storage Facility, Indoor		P	P	P	P
Storage Facility, Outdoor				P	
Storage Yard*				P	
Transit Station		P	P	P	P
Vehicle and Equipment Sales			P	P	
Vehicle Body Shop				P	
Vehicle Repair and Service		P	P	P	
Vehicle Sales, Rental and Service		P		P	
Vehicle Washing Facility		C_2	C_2	P	

(Ord. 3210, 8-23-18) (Ord. 3218, 9-13-18) (Ord. 3233, 12-20-18) (Ord 3277, 10-10-19)

11-2-5: ALLOWED USES IN INDUSTRIAL AND SPECIAL PURPOSE ZONES.

Table 11-2-3: Allowed Uses in Industrial Zones

P = permitted use. C1 = administrative conditional use. C2 = Planning Commission conditional use. C3 = City Council conditional use. A blank denotes a use that is not allowed in that zone.

*Indicates uses that are subject to specific land use provisions set forth in the Standards for Allowed Land Uses Section of this Chapter.

	Industrial		Special Purpose	
Proposed Land Use Classification	**LM**	**I&M**	**R&D**	**P**
Accessory Use*	P	P	P	
Accessory Use, Fuel Station*	P	P	P	
Accessory Use, Storage Yard*	P	P	P	
Airport	P			
Agriculture*	C_2	P		C_2
Agriculture Tourism	C_2	P		C_2
Amusement Center	P	P		
Amusement Center, Indoor Shooting Range*	P	P		
Amusement Center, Outdoor*	P	P		C_2
Adult Business*		P		
Animal Care Clinic*	P	P		
Animal Care Facility*	P	P		
Artist Studio	P	P		
Auction, Livestock		C_2		
Building Contractor Shop	P	P		
Building Material, Garden and Equipment	P	P		
Cemetery*				C_2
Club*	P	P		
Communication Facility	P	P	P	
Correctional Facility or Jail	C_2	P		
Day Care*	P	P	P	
Drinking Establishment	P	P		
Drive-through Establishment*	P	P		
Dwelling, Accessory Unit*	P	P		
Eating Establishment	P	P		
Eating Establishment, Limited	P	P	P	
Equipment Assembly and Sales	P	P		
Financial Institution	P	P	P	
Food Processing, Small Scale Processing With or Without Sales	P	P		
Food Products, Processing, With or Without Retail Sales		P		
Food Store	P	P		
Fuel Station, Super	P	P		

Proposed Land Use Classification	LM	I&M	R&D	P
Health Care and Social Services			P	
Higher Education Facilities	P		P	
Hospital*	C_2	C_2	C_2	
Industry, Craftsman	P	P		
Industry, Heavy		P		
Industry, Light	P	P		
Information Technology	P	P	P	
Laundry and Dry Cleaning	P	P		
Lodging Facility	P		C_2	
Medical Support Facilities	P		P	
Parking Facility	P	P	P	
Park and Recreation Facility*				P
Pawn Shop	P	P		
Personnel Service	P	P		
Professional Service	P	P	P	
Public Service Facility*	P	P	C_2	C_2
Public Service Facility, Limited	P	P	P	P
Public Service Use	P	P	P	P
Railroad Freight Terminal and Station		P		
Recreational Vehicle Park*				C_2
Research and Development Business	P	P	P	
Retail	P	P		
Storage Facility, Indoor	P	P		
Storage Facility, Outdoor	P	P		
Storage Yard*	P	P		
Terminal Yard, Trucking and Bus		P		
Transit Station	P	P	P	
Vehicle and Equipment Sales	P	P		
Vehicle Body Shop	P	P		
Vehicle Sales	P	P		
Vehicle Washing Facility	P	P		
Warehouse	P	P		
Warehouse, Wholesale With Flammable Materials	P	P		

(Ord. 3218, 9-13-18) (Ord. 3233, 12-20-18)

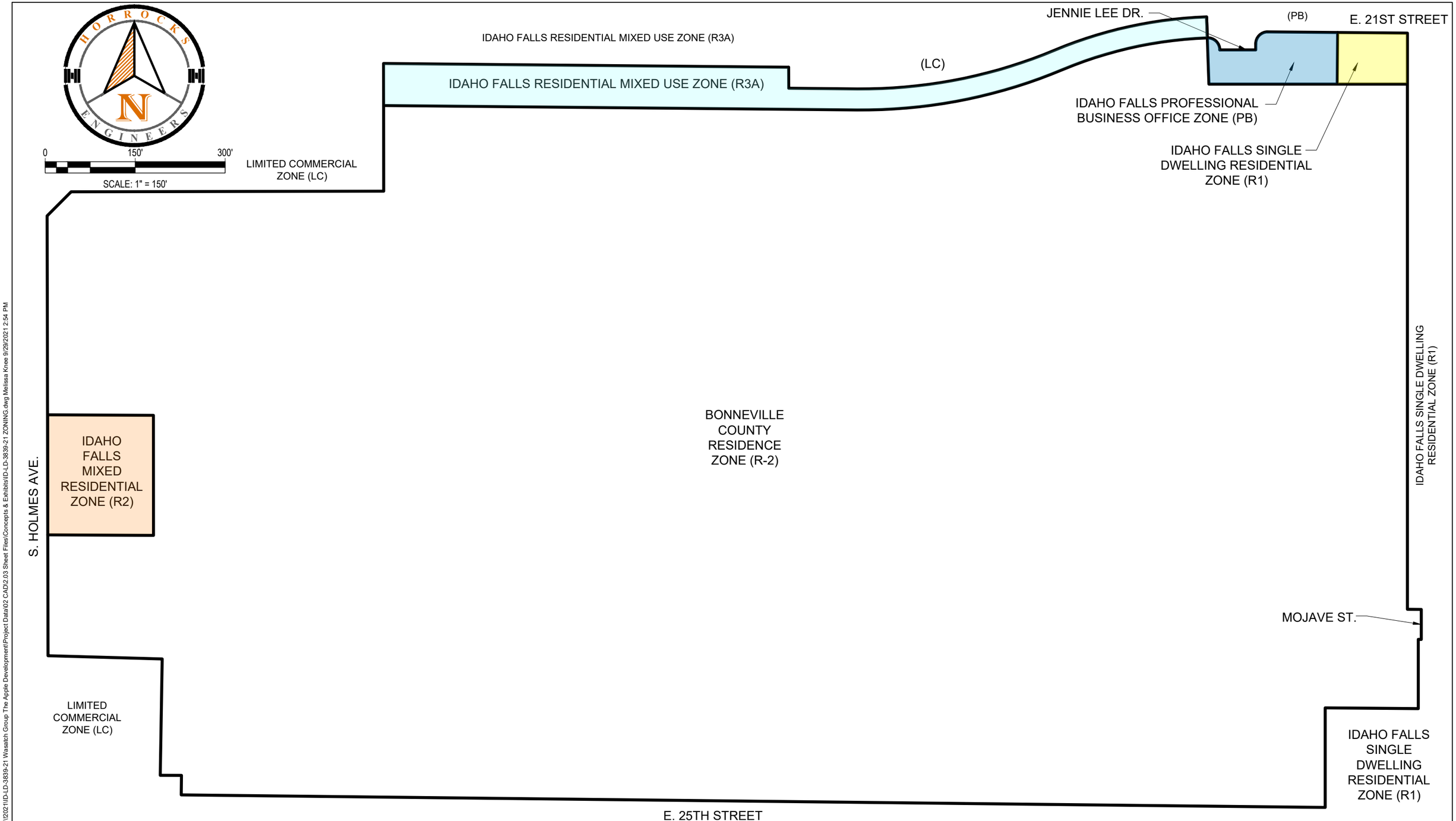

H:\2021\ID-LD-3839-21 Wasatch Group The Apple Development\Project Data\02 CAD\2.03 Sheet Files\Concepts & Exhibits\ID-LD-3839-21 ZONING.dwg Melissa Knee 9/29/2021 2:54 PM

HORROCKS ENGINEERS
2194 Snake River Parkway., Suite 205
Idaho Falls, ID 83402
(208) 522-1223
www.horrocks.com

OWNER:

CITY:

WARNING
0 1/2 1
IF THIS BAR DOES NOT MEASURE 1" THEN DRAWING IS NOT TO SCALE

APPLE DEVELOPMENT EXISTING ZONING

EXHIBIT

DRAWING INFO	
DATE	09/29/21
SCALE	1" = 150'
REV #	DATE
*SEE 2nd SHEET FOR LISTING	
PROJ. NO:	ID-LD-3839-21

1

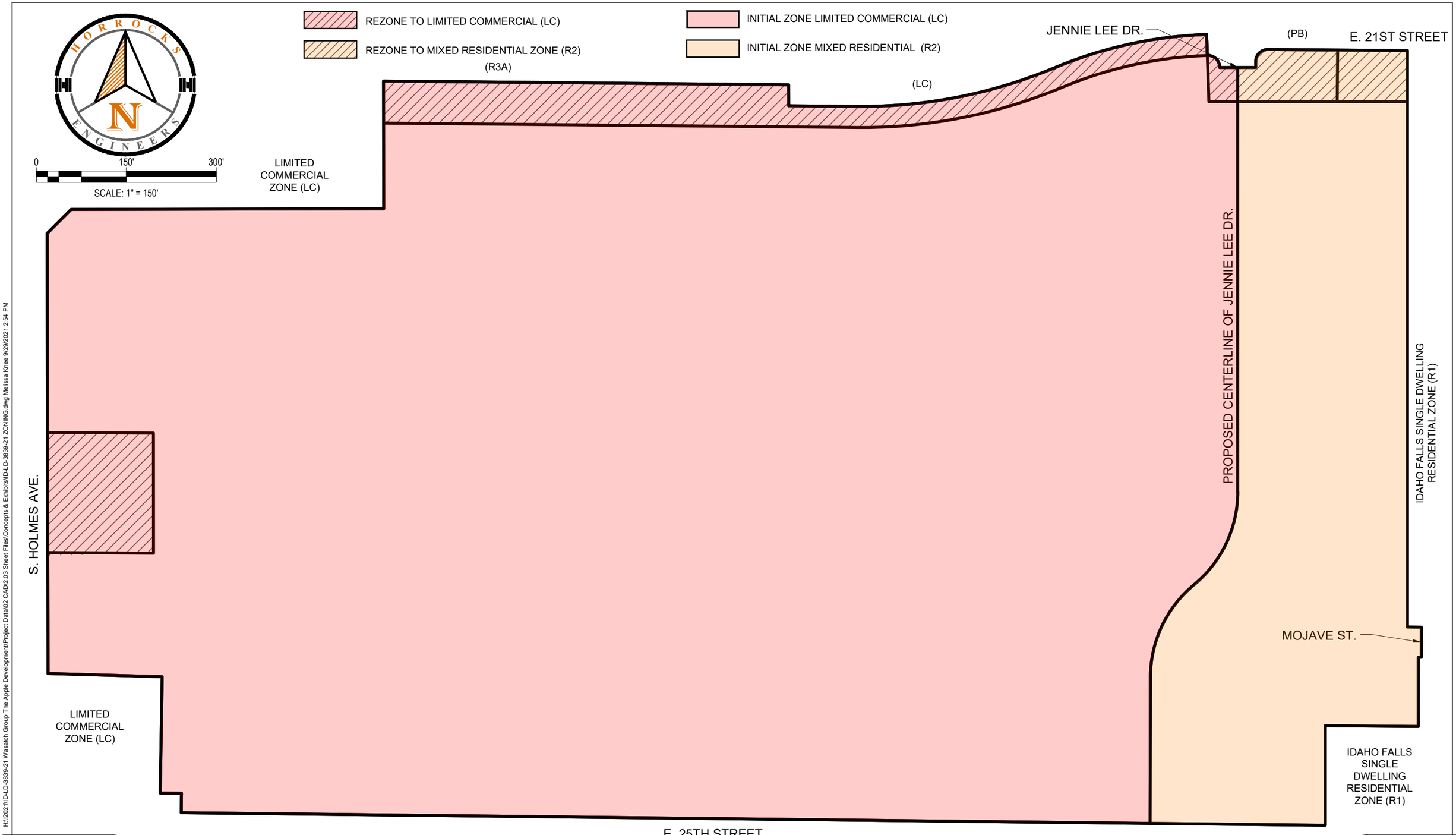

H:\2022\ID-LD-3839-21 Wasatch Group The Apple Development\Project Data\02 CAD\2.03 Sheet Files\Concepts & Exhibits\ID-LD-3839-21 ZONING.dwg Melissa Knee 9/29/2021 2:54 PM

HORROCKS ENGINEERS
2194 Snake River Parkway., Suite 205
Idaho Falls, ID 83402
(208) 522-1223
www.horrocks.com

OWNER:

CITY:

WARNING
0 1/2 1
IF THIS BAR DOES NOT MEASURE 1" THEN DRAWING IS NOT TO SCALE

APPLE DEVELOPMENT PROPOSED ZONING

EXHIBIT

DRAWING INFO	
DATE	09/29/21
SCALE	1" = 150'
REV #	DATE

*SEE 2nd SHEET FOR LISTING
PROJ. NO: ID-LD-3839-21

2

November 9, 2021 7:00 p.m. Planning Department

City Annex Building

MEMBERS PRESENT: Commissioners Brent Dixon, Natalie Black, Joanne Denney, Gene Hicks, Margaret Wimborne, Lindsey Romankiw, George Morrison

MEMBERS ABSENT: Arnold Cantu.

ALSO PRESENT: Planning Director Brad Cramer, Assistant Planning Director Kerry Beutler, and planners Naysha Foster and Caitlin Long, and interested citizens.

CALL TO ORDER: Brent Dixon called the meeting to order at 7:00 p.m.

CHANGES TO AGENDA: None.

MINUTES: Black moved to approve the Minutes from October 5, 2021, Hicks seconded the motion and it passed unanimously.

Hicks moved to approve the Minutes from October 19, 2021, Denney seconded the motion and it passed unanimously.

Public Hearing (s):

3. RZON 21-018: REZONE. Rezone from R3A, R2 and R1 to LC and R2.

Dixon opened the public hearing.

Applicant: Clint Boyle, Horrocks Engineers, 2194 Snake River Parkway, Idaho Falls, Idaho. Boyle indicated this application is a clean-up. Boyle stated that the subject properties have previously been annexed into the City and his clients have assembled all the property to do a master plan development for the area. Boyle showed where the different zonings of LC and R2 and how those proposed rezones line up with the property that was previously annexed and zoned LC and R2.

Foster presented the staff report, a part of the record.

No one appeared in support or opposition.

Dixon closed the public hearing.

Romankiw moved to recommend to the Mayor and City Council approval of the Rezone from R3A, R2, R1 to LC, as proposed, Hicks seconded the motion. Dixon called for roll call vote: Black, yes; Denney, yes; Romankiw, yes; Hicks, yes; Morrison, yes; Wimborne, yes. The motion passed unanimously.

Brad Cramer

From: Dean Groetzinger <dgroetzinger@alleghenyst.com>
Sent: Monday, February 21, 2022 1:14 PM
To: Office of the Mayor; Michelle Ziel-Dingman; Thomas Hally; Jim Freeman; Jim Francis; John Radford; Lisa Burtenshaw; Brad Cramer
Cc: Ann Peterson; Naysha Foster; Caitlin Long; Brian Stevens; Anas Almassrahy; Kerry Beutler
Subject: Regarding Project: RZON21-018 2/24/2022 Idaho Falls City Council Public Meeting . . . .

Importance: High

CAUTION: This email originated from outside of the organization. Do not click links or open attachments unless you recognize the sender and know the content is safe.

Regarding Project: RZON21-018, Rezone from R3A, Residential Mixed Use, R2, Mixed Residential, PB, Professional Business Office, and R1, Single Dwelling Residential to LC, Limited Commercial and R2, Mixed Residential

Hello,

As residents of the Cedar Ridge Subdivision we are extremely concerned about the planned rezoning associated with the above referenced project. We have been unsuccessful in finding out more about the project; calls to City Planning at the number provided were never returned, and the Public Notice sandwich boards provide no detailed information.

We unfortunately will be out of town for the next two weeks but would like to still make our concerns known in advance of the 2/24/2022 Meeting. Our concerns are:

The amount of increased traffic on 25th Street and all streets in the area – particularly through Cedar Ridge, which is already over used to access Sunnyside, etc.
The potential for building two or three story dwellings that overlook adjacent single family homes.
The potential for using 25th Street, the surrounding streets, and Community Park parking lot for overflow parking. Alternatively the loss of the same for large tournaments throughout the year.
The overall increase in density to the area and the negative impact on the same.

There are more, but these are the most concerning.

Our concerns are fueled by the City's stated 'desperation' for affordable housing in the Idaho Falls area* – a fact which has been demonstrated by projects being built like the 3 story apartments on Broadway behind Papa Murphy's and Soapy's; the 'townhomes' off of 17th Street behind Starbucks and the Firehose Car Wash. There are other examples.

Simply stated, we unfortunately don't trust that our interests and the interests of other home owners/residents affected by this development, will be appropriately taken into consideration in your decision making process.

Please take the foregoing into consideration at your meeting.

Thank you,

Dean and Karen Groetzinger
706 Cedar Ridge Drive
Idaho Falls, ID 83404
208.521.1739

**I.F. approves annexation for property north of Community Park, By Katie Fritz, Feb. 14, 2022.*

"Based on the current configuration of the neighborhood, Idaho Falls Planning Commissioner Natalie Black said the Limited Commercial designation, with its associated multifamily housing developments, makes "perfect sense" for the 55-acre parcel, which is within walking distance of Community Park as well as local schools and commercial shopping areas.

She acknowledged that traffic is a "major issue" in Idaho Falls and "will be for a long time," but she hoped that the pedestrian-friendly location of the new development might alleviate some future local congestion while also providing housing — which the city is "so desperate" for.

"No one wants apartments next to their neighborhood, but we need more housing, and this is an area that, to me, makes sense to have that," she said.

Confidentiality Notice: The information in this message is intended for the named recipients only. It may contain information that is privileged, confidential or otherwise protected from disclosure. If you are not the intended recipient, you are hereby notified that any disclosure, copying, distribution, or the taking of any action in reliance on the contents of this message is strictly prohibited. If you have received this e-mail in error, do not print it or disseminate it or its contents. In such event, please notify the sender by return e-mail and delete the e-mail file immediately thereafter. Thank you.

ORDINANCE NO._____

AN ORDINANCE OF THE CITY OF IDAHO FALLS, IDAHO, A MUNICIPAL CORPORATION OF THE STATE OF IDAHO; PROVIDING FOR THE REZONING OF APPROXIMATELY 3.079 ACRES AS DESCRIBED IN SECTION 1 OF THIS ORDINANCE, REZONE 0.818 ACRES FROM R2, MIXED RESIDENTIAL TO LC, LIMITED COMMERCIAL, 1.658 ACRES FROM R3A, RESIDENTIAL MIXED USE TO LC, LIMITED COMMERCIAL 0.379 ACRES FROM PB, PROFFESIONAL BUSINESS OFFICE TO R2, MIXED RESIDENTIAL AND 0.224 ACRES FROM R1, SINGLE DWELLING RESIDENTIAL TO R2, MIXED RESIDENTIAL; AND PROVIDING SEVERABILITY, PUBLICATION BY SUMMARY, AND ESTABLISHING EFFECTIVE DATE.

WHEREAS, the proposed zoning district of lands described in Section 1 is LC and R2 Zone for such annexed lands and such zoning is consistent with the current City of Idaho Falls Comprehensive Plan Land use designation "Commercial" and "Higher Density" and

WHEREAS, the proposed zoning district is consistent and compatible with the existing and surrounding zoning districts and is consistent with the City of Idaho Falls Comprehensive Plan; and

WHEREAS, Idaho Falls Planning and Zoning Commission held a duly noticed public hearing on November 9, 2021, and recommended approval of zoning the subject property to LC and R2 Zones; and

WHEREAS, the Idaho Falls City Council conducted a duly noticed public hearing and passed a motion to approve this zoning on February 24, 2022.

NOW THEREFORE, BE IT ORDAINED BY THE MAYOR AND COUNCIL OF THE CITY OF IDAHO FALLS, IDAHO, AS FOLLOWS:

SECTION 1: LEGAL DESCRIPTION:

This ordinance shall apply to the following described lands in Idaho Falls, Idaho, Bonneville County, to-wit:

Approximately 3.079 Acres in the SW ¼ of the NW ¼ of Section 29, T2N, R 38E

SECTION 2. Zoning. That the property described in Section 1 of this Ordinance be and the same hereby is zoned "LC" and "R2" as shown on Exhibit 1 and the City Planner is hereby ordered to make the necessary amendments to the official maps of the City of Idaho Falls which are on file at the City Planning Department Offices, 680 Park Avenue.

SECTION 3. Savings and Severability Clause. The provisions and parts of this Ordinance are intended to be severable. If any section, sentence, clause or phrase of this Ordinance should be held to be invalid or unconstitutional by a court of competent jurisdiction, such invalidity or unconstitutionality shall not affect the validity or constitutionality of any other section, sentence,

clause or phrase of this Ordinance.

SECTION 4. Publication. This Ordinance, or a summary thereof in compliance with Idaho Code, shall be published once in the official newspaper of the City, and shall take effect immediately upon its passage, approval, and publication.

SECTION 5. Effective Date. This Ordinance shall be in full force and effect from and after its passage, approval, and publication.

PASSED by the City Council and APPROVED by the Mayor of the City of Idaho Falls, Idaho, this_____day of_____, 2022.

CITY OF IDAHO FALLS, IDAHO

_____
Rebecca L. Noah Casper, Mayor

ATTEST:

_____
Kathy Hampton, City Clerk

(SEAL)

STATE OF IDAHO)
) ss:
County of Bonneville)

I, KATHY HAMPTON, CITY CLERK OF THE CITY OF IDAHO FALLS, IDAHO, DO HEREBY CERTIFY:

> That the above and foregoing is a full, true, and correct copy of the Ordinance entitled, "AN ORDINANCE OF THE CITY OF IDAHO FALLS, IDAHO, A MUNICIPAL CORPORATION OF THE STATE OF IDAHO; PROVIDING FOR THE REZONING OF APPROXIMATELY 3.079ACRES AS DESCRIBED IN SECTION 1 OF THIS ORDINANCE TO R2 AND LC; AND PROVIDING SEVERABILITY, PUBLICATION BY SUMMARY, AND ESTABLISHING EFFECTIVE DATE."

_____
Kathy Hampton, City Clerk

REASONED STATEMENT OF RELEVANT CRITERIA AND STANDARDS

REZONE FROM 0.818 ACRES FROM R2, MIXED RESIDENTIAL TO LC, LIMITED COMMERCIAL, 1.658 ACRES FROM R3A, RESIDENTIAL MIXED USE TO LC, LIMITED COMMERCIAL, 0.379 ACRES FROM PB, PROFFESIONAL BUSINESS OFFICE TO R2, MIXED RESIDENTIAL, AND 0.224 ACRES FROM R1, SINGLE DWELLING RESIDENTIAL TO R2, MIXED RESIDENTIAL, APPROXIMATELY 3.079 TOTAL ACRES IN THE SOUTH WEST ¼ OF THE NORTH WEST ¼ OF SECTION 29, T 2N, R 38E, GENERALLY LOCATED NORTH OF E 25TH ST, EAST OF S HOLMES, SOUTH OF E 17TH ST, CRAIG ST.

WHEREAS, the applicant filed an application for annexation on September 29, 2021; and

WHEREAS, this matter came before the Idaho Falls Planning and Zoning Commission during a duly noticed public hearing on November 9, 2021; and

WHEREAS, this matter came before the Idaho Falls City council during a duly noticed public hearing on February 24, 2022; and

WHEREAS, having reviewed the application, including all exhibits entered and having considered the issues presented:

I. RELEVANT CRITERIA AND STANDARDS

1. The City Council considered the request pursuant to City of Idaho Falls Comprehensive Plan, City of Idaho Falls Zoning Ordinance, City of Idaho Falls Subdivision Ordinance, the Local Land Use Planning Act, and other applicable development regulations.
2. The property is approximately 3.079 total acres generally located North of E 25th St, East of S Holmes, South of E 17th St, and West of Craig St.
3. The Comprehensive Plan designates this area as Commercial and Higher Density.
4. The proposed zoning is LC and R2 Zones are consistent with the Comprehensive Plan map and policies and existing zoning and land uses in the area.
5. Idaho Falls Planning and Zoning Commission recommended approval of zoning the property to LC and R2.

II. DECISION

Based on the above Reasoned Statement of Relevant Criteria, the City Council of the City of Idaho Falls approved the initial zoning as presented.

PASSED BY CITY COUNCIL OF THE CITY OF IDAHO FALLS

THIS _____ DAY OF _____, 2022

_____

Rebecca Casper - Mayor

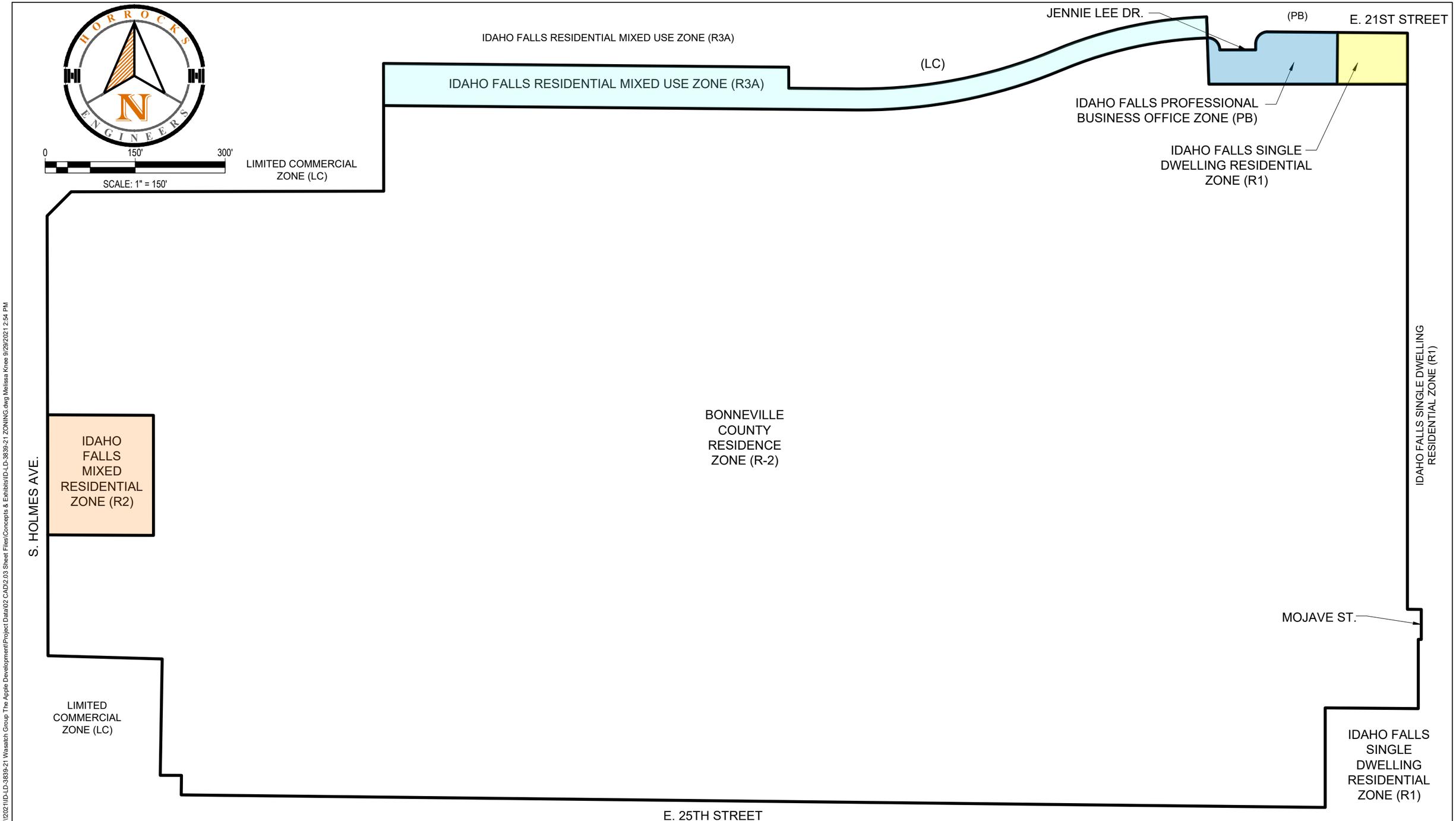

H:\2021\ID-LD-3839-21 Wasatch Group The Apple Development\Project Data\02 CAD\2.03 Sheet Files\Concepts & Exhibits\ID-LD-3839-21 ZONING.dwg Melissa Knee 9/29/2021 2:54 PM

HORROCKS ENGINEERS
2194 Snake River Parkway., Suite 205
Idaho Falls, ID 83402
(208) 522-1223
www.horrocks.com

OWNER:

CITY:

WARNING
0 1/2 1
IF THIS BAR DOES NOT MEASURE 1" THEN DRAWING IS NOT TO SCALE

APPLE DEVELOPMENT EXISTING ZONING

EXHIBIT

DRAWING INFO	
DATE	09/29/21
SCALE	1" = 150'
REV #	DATE
*SEE 2nd SHEET FOR LISTING	
PROJ. NO:	ID-LD-3839-21

1

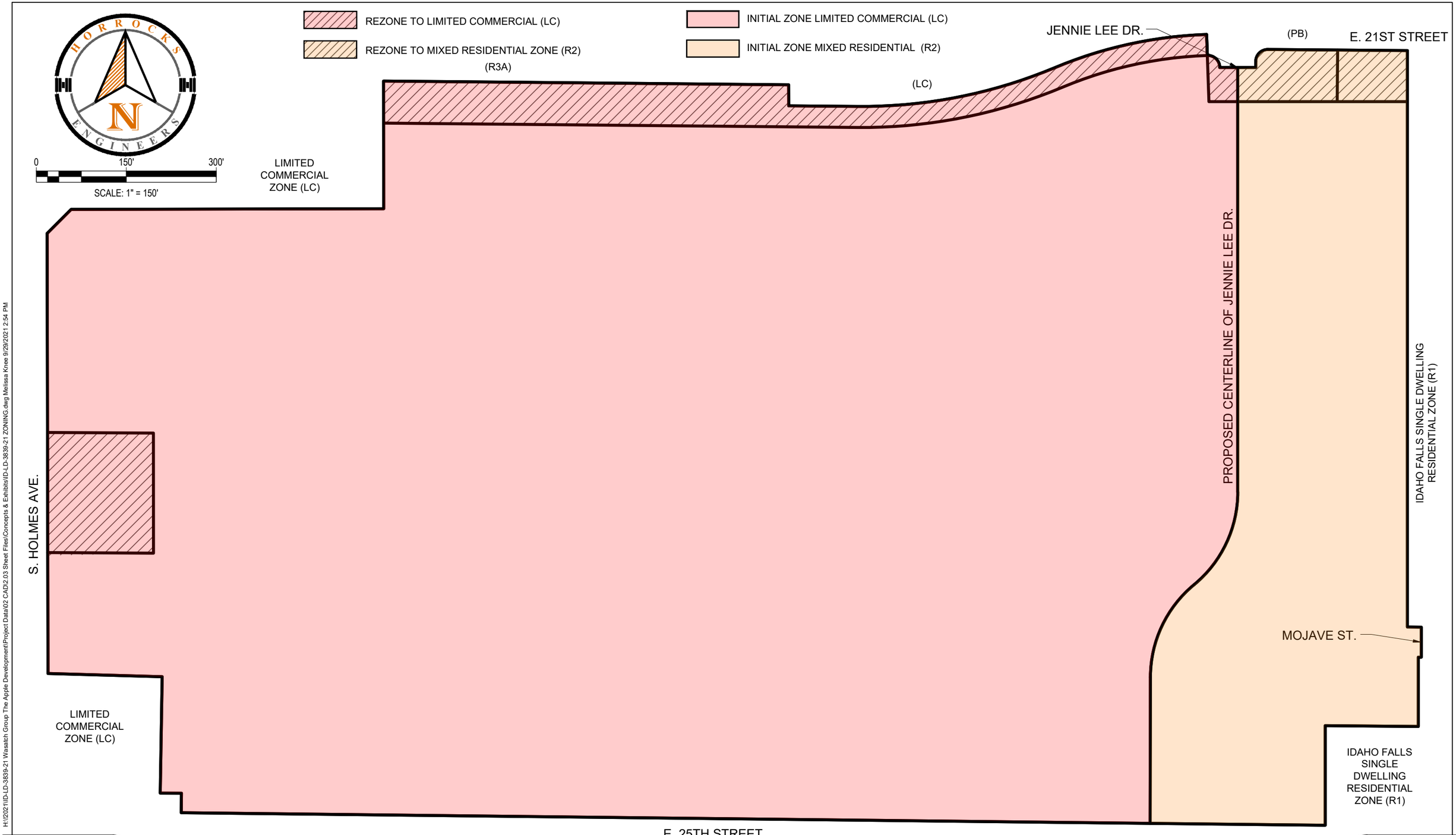

H:\2022\ID-LD-3839-21 Wasatch Group The Apple Development\Project Data\02 CAD\2.03 Sheet Files\Concepts & Exhibits\ID-LD-3839-21 ZONING.dwg Melissa Knee 9/29/2021 2:54 PM

HORROCKS ENGINEERS
2194 Snake River Parkway., Suite 205
Idaho Falls, ID 83402
(208) 522-1223
www.horrocks.com

OWNER:

CITY:

WARNING
0 1/2 1
IF THIS BAR DOES NOT MEASURE 1" THEN DRAWING IS NOT TO SCALE

APPLE DEVELOPMENT PROPOSED ZONING

EXHIBIT

DRAWING INFO	
DATE	09/29/21
SCALE	1" = 150'
REV #	DATE

*SEE 2nd SHEET FOR LISTING
PROJ. NO: ID-LD-3839-21

2

Memorandum

File #: 21-419 **City Council Meeting**

FROM: Brad Cramer, Director
DATE: Monday, January 31, 2022
DEPARTMENT: Community Development Services

Subject

Public Hearing-Rezone from HC, Highway Commercial to LC Limited Commercial, Zoning Ordinance and Reasoned Statement of Relevant Criteria and Standards for approximately 20.5 acres in the northwest 1/4 northeast 1/4 of Section 16, Township 2 North, Range 38 East and Lots 1 and 2, Block 1 Liberty Park.

Council Action Desired

☒ Ordinance ☐ Resolution ☒ Public Hearing

☐ Other Action (Approval, Authorization, Ratification, etc.)

1. Approve the Ordinance Rezoning approximately 20.5 acres in the northwest 1/4 northeast 1/4 of Section 16, Township 2 North, Range 38 East and Lots 1 and 2, Block 1 Liberty Park from HC to LC, under suspension of the rules requiring three complete and separate readings and request that it be read by title and published by summary (or consider the Ordinance on the first reading and that it be read by title, reject the Ordinance, or take other action deemed appropriate).

2. Approve the Reasoned Statement of Relevant Criteria and Standards for the Rezone from HC to LC and give authorization for the Mayor to execute the necessary documents (or take other action as deemed appropriate).

Description, Background Information & Purpose

Attached is the application for Rezoning from HC to LC, Zoning Ordinance, and Reasoned Statement of Relevant Criteria and Standards for approximately 20.5 acres in the northwest 1/4 northeast 1/4 of Section 16, Township 2 North, Range 38 East and Lots 1 and 2, Block 1 Liberty Park. The Planning and Zoning Commission considered this item at its February 2, 2022, meeting and recommended to the Mayor and City Council approval of the zone change with a unanimous vote. Staff concurs with this recommendation.

Alignment with City & Department Planning Objectives

☐ ☒ ☒ ☐ ☒ ☐ ☒ ☐

Consideration of the rezone must be done consistent with the principles of the Comprehensive Plan, which includes many policies and goals related to Good Governance, Growth, Sustainability, and Livable Communities.

Interdepartmental Coordination

The Rezone was reviewed by staff from the Planning Division.

Fiscal Impact

NA

Legal Review

The application and ordinance have been reviewed by the City Attorney pursuant to applicable law.

Rezone

RZON21-020 HC to LC East Lincoln Rd

Legend

- RZON21-020
- City Limit

Overlays

- PT
- PT&T-1
- PUD
- T-1
- T-2

Zoning

- RE
- RP
- R1
- R2
- TN
- RMH
- R3
- R3A
- PB
- CC
- LC
- HC
- R&D
- LM
- I&M
- P

IDAHO FALLS

Planning Division
City Annex Building
680 Park Ave.
Idaho Falls, ID 83402
(208) 612-8276

N

Rezone

RZON21-020 HC to LC East Lincoln Rd

- Estate
- Low Density
- Higher Density
- Greenbelt Mixed Uses
- Parks and Recreation
- Public Facilities and Open Spaces
- Commercial
- Employment Centers
- Medical Services Centers
- Higher Education Centers
- Planned Transition
- Highway-related industrial
- Railroad-related industrial

Comprehensive Plan

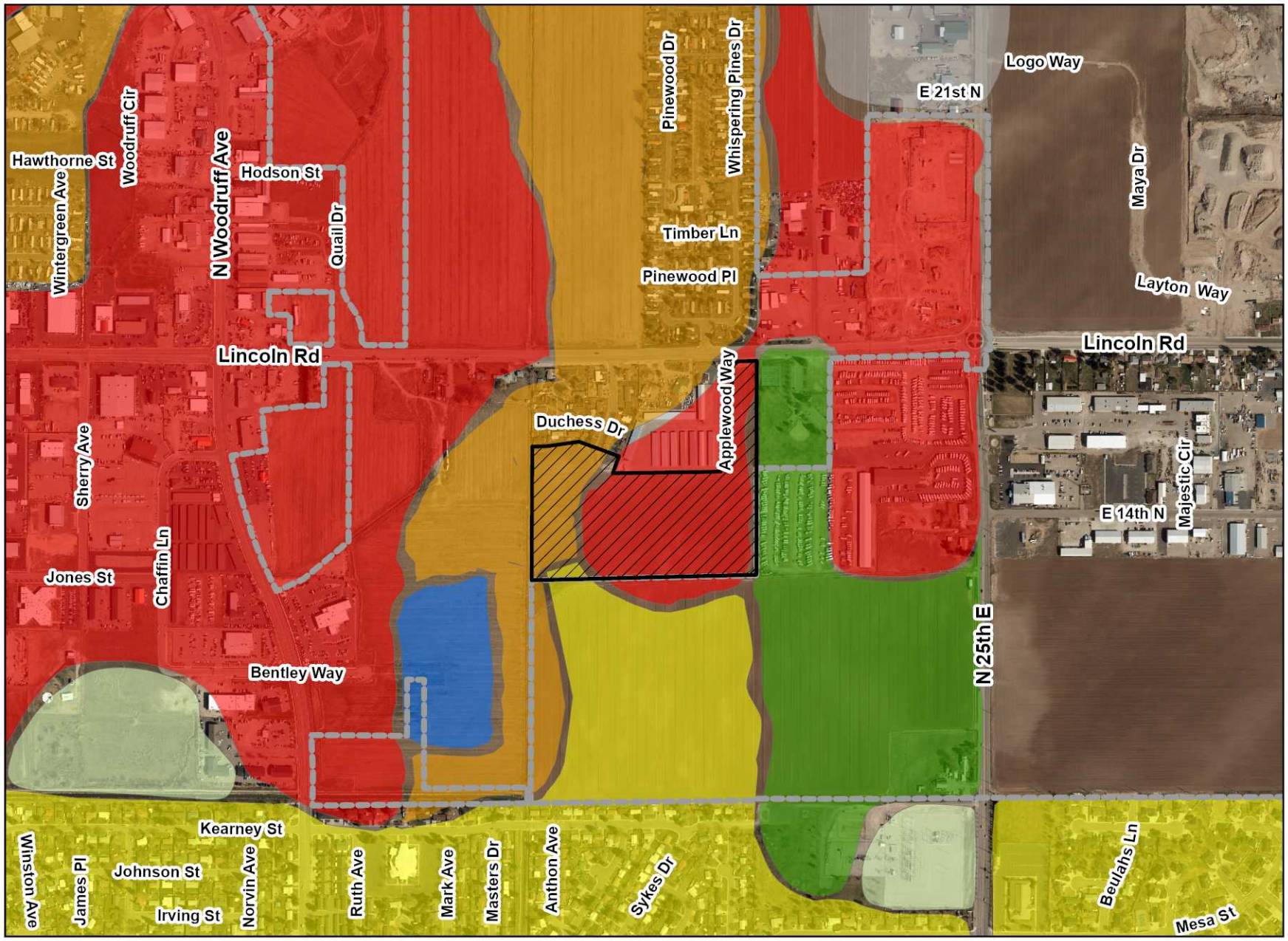

IDAHO FALLS

Planning Division
City Annex Building
680 Park Ave.
Idaho Falls, ID 83402
(208) 612-8276

N

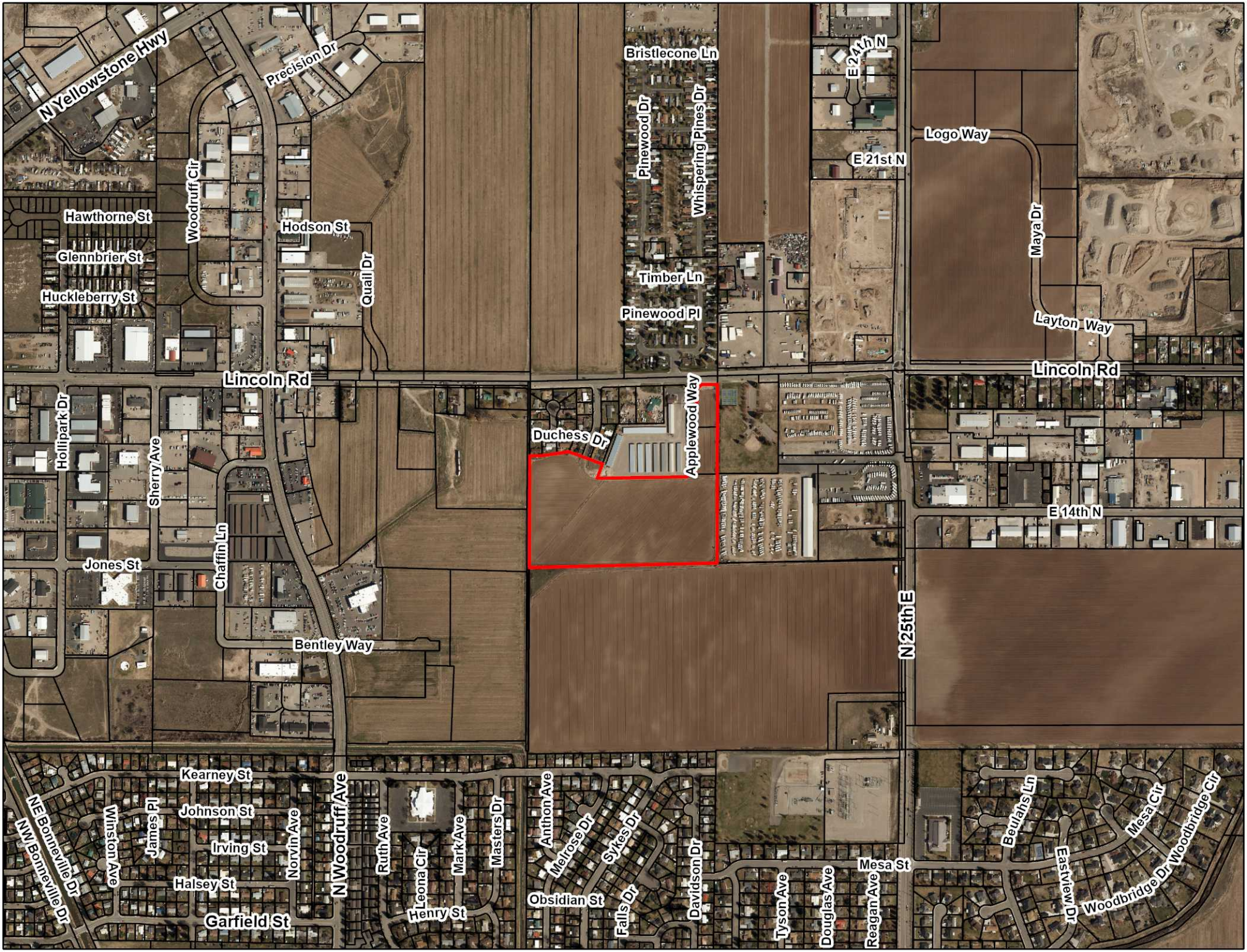
N Yellowstone Hwy
Precision Dr
Bristlecone Ln
E 24th N
Pinewood Dr
Whispering Pines Dr
Logo Way
E 21st N
Woodruff Cir
Hawthorne St
Hodson St
Maya Dr
Glennbrier St
Quail Dr
Huckleberry St
Timber Ln
Pinewood Pl
Layton Way
Lincoln Rd
Lincoln Rd
Hollipark Dr
Sherry Ave
Duchess Dr
Applewood Way
E 14th N
Chaffin Ln
Jones St
Bentley Way
N 25th E
Kearney St
Johnson St
Irving St
Halsey St
Garfield St
NE Bonneville Dr
NW Bonneville Dr
Winston Ave
James Pl
Norvin Ave
N Woodruff Ave
Ruth Ave
Leona Cir
Mark Ave
Masters Dr
Henry St
Anthon Ave
Melrose Dr
Sykes Dr
Obsidian St
Falls Dr
Davidson Dr
Tyson Ave
Douglas Ave
Reagan Ave
Mesa St
Beulahs Ln
Eastview Dr
Mesa Cir
Woodbridge Dr
Woodbridge Cir

IDAHO FALLS PLANNING AND ZONING COMMISSION
STAFF REPORT

REZONE FROM HC TO LC

NW 1/4 NE 1/4, Sec 16, T2N, R 38 and Lot 1 & 2, Block 1, Liberty Park

February 24th, 2022

IDAHO FALLS

Community Development Services

Applicant: Sakkara Properties (Rachel Whoolery)

Project Manager: Anas Almassrahy

Location: This property is located north of Kearney St, east of N Woodruff Ave, south of Lincoln Rd, west of N 25th E.

Size: ~ 22.84 acres

Existing Zoning:
Site: HC
North: R1, HC, RMH
South: County R1
East: P, County R1 and C1
West: LC, HC

Existing Land Uses:
Site: Vacant/ Agricultural
North: Residential/ Commercial
South: Agricultural
East: Commercial
West: Proposed Residential/ Commercial

Future Land Use Map:
Higher Density Residential & Commercial

Attachments:
1. Zoning Ordinance Information
2. Comprehensive Plan Policies
3. Maps and aerial photos

Requested Action: To approve of the rezone from HC, Highway Commercial, to LC, Limited Commercial to the Mayor and City Council.

History: The property was annexed and zoned HC in 2018 as a part of a city-initiated annexation. The HC designation was chosen because the property was zoned C-2 in the county. The HC Zone aligns the most with the county's C-2. This area was proposed to be platted in 1979 to develop 82 single family lots. This plat was recorded but the project never got built. The property was annexed on August 9th, 2018.

Staff Comments: This property is located north of Kearney St, east of N Woodruff Ave, south of Lincoln Rd, west of N 25th E. The LC zone would be consistent with "Higher Density Residential & Commercial" future land use designation. The LC Zone would also provide flexibility in the development, and thus help promote quicker development in this area. The LC is a commercial zone that allows smaller scale retail and other services which supply the daily needs of residents. This zone is usually located on major streets contiguous to residential uses making it easily accessible for pedestrian to walk or use non-motorized vehicles. Lincoln Road is classified as an arterial road.

The LC Zone also allows a wide variety dwelling types under the R3A development standards, allowing up to 35 units per net acre. This zone is also located near commercial services.

Staff Recommendation: Staff recommends approval of the rezone to LC as it is consistent with the policies of the Comprehensive Plan and existing land uses in the area.

Rezoning Considerations: Because the comprehensive plan provides only general guidance for zoning decisions, the Planning Commission shall also take the following considerations into account:

Criteria for Rezoning Section 11-6-5(I) of Ordinance	**Staff Comment**
The Zoning is consistent with the principles of City's adopted Comprehensive Plan, as required by Idaho Code.	The zoning is consistent with the policies of the Comprehensive Plan. Mixed use and higher density housing are to be located near major roads where services and utilities can be provided.
The potential for traffic congestion as a result of development or changing land use in the area and need that may be created for wider streets, additional turning lanes and signals, and other transportation improvements.	A change in zoning designation for the ~ 22.84 total acres will not affect the potential traffic generation in the area. Lincoln Road does not currently have traffic capacity issues. Applewood way will also be extended providing for connection to future development to the west and south.
The potential for exceeding the capacity of existing public services, including, but not limited to: schools, public safety services, emergency medical services, solid waste collection and disposal, water and sewer services, other public utilities, and parks and recreational services.	Staff would anticipate little to no impact to the capacity of existing public services as a result of the zone change.
The potential for nuisances or health and safety hazards that could have an adverse effect on adjoining properties.	Staff is not aware of any potential nuisances or health and safety hazards as a result of the zone change.
Recent changes in land use on adjoining parcels or in the neighborhood of the proposed zoning map amendment.	This area has seen many land use changes since Costco was located at the intersection of Lincoln Rd and 25th E. Additionally property to the west has recently been annexed and zoned LC.
Zoning Application Questions:	**Applicant's response:**
Explain how the proposed change is in accordance with the City of Idaho Falls Comprehensive Plan.	1. Since Idaho Falls desired to protect neighborhoods from "being invaded with box stores", they created transition areas. The new Costco was built away from existing neighborhoods in a "transition area" so there is no current housing available to walk to this shopping area, our goal is to develop new neighborhoods close to Costco, next to Lincoln Park and surrounding schools. 2. Idaho Falls is missing Middle Housing options. With the current growth and even larger future growth, our goal is to provide a mix of apartments and townhouses for the demographic that cannot afford to purchase their own stand alone house or perhaps have aged out of taking care of a yard-- while increasing density around new shopping areas.

What changes have occurred in the area to justify the request for rezone?	A new Costco was built in Idaho Falls which created an anchor for commercial and residential growth in the area. This property was used for agriculture but now its maximum and best use would be to provide higher density homes in the area. Idaho Falls has a housing shortage caused by housing costs rising 35.8% in the last year and population growth of 13.74% in the last 10 years. In addition, the projected job growth for the next 10 years is 43%. INL has recently accepted additional large government contracts and is currently building on to their campus preparing for their huge growth. All of these new employees that will come in the next 3 years will need housing and will add to the current housing shortage. These parcels are an ideal location to add attractive new housing density to the community in a new shopping area.
Are there existing land uses in the area similar to the proposed use?	Our three parcels are contiguous to the neighboring parcel on the west which is zoned- Limited Commercial. By rezoning our properties to Limited Commercial, we would be conforming our properties to the neighbors existing zone.
Is the site large enough to accommodate required access, parking, landscaping, etc. for the proposed use?	Yes. We have over 23 acres to develop into attractive commercial buildings, townhouses, and apartment complexes with room for green spaces, parking, and amenities. We already have 2 existing access roads from our property to Lincoln Road providing adequate ingress and egress.

Comprehensive Plan Policies:

Residential development should reflect the economic and social diversity. (p 39)

Higher density housing should be located closer to service areas and those streets designed to move traffic, such as arterial streets and collectors, with access only to the collector street. (pg. 39)

Plan for different commercial functions. (p. 46)

Develop nodes of clustered development. (p.67)

Encourage development in areas served by public utilities or where extensions of facilities are leastcostly. (p. 67)

Zoning:

11-3-5: PURPOSE OF COMMERCIAL ZONES
HC Highway and General Commercial Zone. This zone provides a commercial zone for retail and service uses serving the traveling public. Characteristics of the Zone are buildings set back from the right-of-way line to promote safety on the highway and maintain maximum use of highway right-of-way for travel purposes, and a wide variety of architectural forms and shapes. This Zone should be located at specific locations along highways leading into The City.

11-3-5: PURPOSE OF COMMERCIAL ZONES
LC Limited Commercial Zone. This zone provides a commercial zone for retail and service useswhich supply the daily household needs of the City's residents. This Zone is usually located on major streets contiguous to residential uses. This zone is characterized by smaller scale commercial uses which are easily accessible by pedestrians and non-motorized vehicles from thesurrounding residential neighborhoods, although larger scale developments such as big-box stores may still serve as anchors. Connectivity is provided with walkways that provide access to and through the development site. Parking for vehicles is understated by the use of landscaping, location, and provision of pedestrian walkways to the businesses.

Table 11-3-5: Dimensional Standards for Commercial Zones

	CC	PB	LC	HC
Site width at front setback - Minimum in ft.		50	*	50
Setbacks – Minimum in ft.				
Front		20	20*	20
Side			*	
Rear			*	
Landscape buffer contiguous to street* in ft.	7*	15	20*	20*
Landscape buffer contiguous to a residential Zones* in ft.	10	10	20/10	30/10
Building height – Maximum in ft.		*	*	
Lot Coverage- Maximum in %		80	80	
*See explanations, exceptions and qualifications that follow in Section 11-3-6A (1-6) of this Zoning Code.				

11-2-4: ALLOWED USES IN COMMERCIAL ZONES.

Table 11-2-2: Allowed Uses in Commercial Zones

P = permitted use. C_1 = administrative conditional use. C_2 = Planning Commission conditional use. C_3 = City Council conditional use. A blank denotes a use that is not allowed in that zone.

*Indicates uses that are subject to specific land use provisions set forth in the Standards for Allowed Land Uses Section of this Chapter.

	Commercial				
Proposed Land Use Classification	**PB**	**CC**	**LC**	**HC**	**PT**
Accessory use*	P	P	P	P	P
Accessory use, Fuel Station*		P	P	P	
Accessory use, Storage Yard*		P	P	P	
Amusement Center, Indoor		P	P	P	
Amusement Center, Indoor Shooting Range*		P	P	P	
Amusement Center, Outdoor*				P	
Animal Care Clinic*	P	P	P	P	
Animal Care Facility*				P	
Bed and Breakfast*		P	P		P
Boarding /Rooming House		P	P		P
Building Material, Garden and Farm Supplies			P	P	
Cemetery*		C_2	C_2	C_2	
Club*		P	P	P	
Communication Facility		P	P	P	
Day Care, all Types*	P	P	P	P	P
Drinking establishment		P		P	
Drive-through Establishment *	P*	P	P	P	P
Dwelling, accessory unit *		P	P	P	P
Dwelling, multi-unit*		P	P		P
Dwelling, single unit attached			P		
Dwelling, single unit detached			P		
Dwelling, two unit			P		P
Eating establishment		P	P	P	P
Eating Establishment, limited	P	P	P	P	P
Financial Institutions	P	P	P	P	P
Entertainment and Cultural Facilities	P	P	P	P	P

Proposed Land Use Classification	PB	CC	LC	HC	PT
Equipment Sales, Rental and Services			P	P	
Food Processing, small scale				P	
Food store		P	P	P	P
Health Care and Social Services	P	P	P	P	P
Higher Education Center		P	P	P	P
Home Occupation*	P	P	P	P	P
Hospital*	C_2	C_2	C_2	C_2	C_2
Industry, craftsman	P	P	P	P	
Industry, light		P		P	
Information Technology	P	P	P	P	P
Laundry and Dry Cleaning		P			P
Live-Work*	C_2	P	P	P	P
Lodging Facility		P	P	P	P
Mortuary				P	P
Parking Facility		P	P	P	P
Pawn Shop		P			
Personal Service	P	P	P	P	P
Professional Service	P	P	P	P	P
Planned Unit Development*		C_3	C_3		C_3
Public Service Facility*	C_2	C_2	C_2	C_2	C_2
Public Service Facility, Limited	P	P	P	P	P
Public Service Use	P	P	P	P	P
Recreation Vehicle Park*				P	
Religious Institution*		P	P	P	P
Residential Care Facility	P	P	P	P	P
Retail		P	P	P	P
School*		P	P	P	P
Short Term Rental*		P	P		P
Fuel Station		P	P	P	
Fuel Station, Super		C_2	P	P	
Storage Facility, Indoor		P	P	P	P
Storage Facility, Outdoor				P	
Storage Yard*				P	
Transit Station		P	P	P	P
Vehicle and Equipment Sales			P	P	
Vehicle Body Shop				P	
Vehicle Repair and Service		P	P	P	
Vehicle Sales, Rental and Service		P		P	
Vehicle Washing Facility		C_2	C_2	P	

(Ord. 3210, 8-23-18) (Ord. 3218, 9-13-18) (Ord. 3233, 12-20-18) (Ord. 3277, 10-10-19)

February 1, 2022 7:00 p.m. Planning Department

City Annex Building

MEMBERS PRESENT: Commissioners Brent Dixon, Joanne Denney, Arnold Cantu, George Morrison, Margaret Wimborne, Lindsey Romankiw

MEMBERS ABSENT: None.

ALSO PRESENT: Assistant Planning Director Kerry Beutler, planners Anas Almassrahy and Caitlin Long and interested citizens.

CALL TO ORDER: Brent Dixon called the meeting to order at 7:00 p.m.

CHANGES TO AGENDA: Item # 4 has been postponed.

MINUTES: **Cantu moved to approve the Minutes from January 4, 2022, Denney seconded the motion and it passed unanimously.**

Public Hearing(s):

5. RZON 21-020: REZONE. Rezone from HC to LC

Denney opened the public hearing.

Applicant: Rachel Whoolery, P.O. Box 327, Rexburg, Idaho 83440. Whoolery is representing the owners as the developer and designer/project manager. Whoolery presented that this property is across the street from Costco. Whoolery stated that Idaho Falls didn't want to have box stores near neighborhoods, so Costco is in a transition area that doesn't have a lot around it, and so now there is a new shopping area, but not housing that can walk to the shopping center. Whoolery is requesting a rezone from Highway Commercial to Limited Commercial in order to have a mix of commercial use buffering and go back into a multi-housing development. Whoolery stated that the neighbors are currently zoned LC, and they want to conform their zone to the neighbors to keep the development of the properties with similar uses. Whoolery feels that LC Zone can create a commercial and housing options. Whoolery reported that housing costs have risen 35% and a population growth on 13% in the last 10 years. Whoolery stated that the area is growing and not everyone can afford a stand-alone house. Whoolery is hoping to create the middle housing that is missing in this area. Whoolery is hoping to have a mix of commercial and multi-family complexes. Whoolery stated that there is 23 acres to develop, and they can work with the green spaces and make it attractive. Whoolery stated that there are two existing access roads (Jonathan Ave. and Applewood Way). Whoolery is working with the neighbors to tie into other developments.

Almassrahy presented the staff report, a part of the record.

No one appeared in Support/Opposition.

Denney closed the public hearing.

Wimborne feels the applicant has looked at the area, and the zone is a good transition zone and compatible with the other uses. Wimborne feels that the applicant has taken time to look at how the other properties have developed so there is consistency.

Morrison feels this is a good idea to change the zoning as it will allow for housing within walking distance to stores and it will be an improvement over the HC zone.

Dixon stated that the Comprehensive Plan does identify the majority of this area for commercial as well as a portion of the area for higher density residential. Dixon stated that this zone makes good sense for residential rather than commercial because it is next to a park. Dixon believes that going forward as things develop around Costco the idea of using the land on the corner of Hitt and Lincoln as RV Parking will change, and they will find a higher use for the property. Dixon has some concern for the existing single family residential and the access via Jonathan Ave.

Wimborne moved to recommend to the Mayor and City Council approval of the Rezone from HC to LC for the NW 1/4 NE ¼, Section 16, T2N, R 38 and Lot 1 & 2, Block 1, Liberty Park, Cantu seconded the motion. Denney called for roll call vote: Romankiw, yes; Wimborne, yes; Dixon, yes; Morrison, yes; Cantu, yes. The motion passed unanimously

Beutler gave updates to the Commission: Beutler stated that there are 2 meetings in February with the next one on February 15, 2022; Beutler stated that the Comprehensive Plan is scheduled to go to city Council next week on February 10th. Beutler stated that they will not take action that night but would take action on the 24th of February. Beutler stated that Cramer and Beutler are working with the Mayors office and have done some interviews with potential volunteers to fill vacant seats on the Commission. Beutler stated that they have recommended for 2 additional people that would get 8 on the Commission. Beutler stated that the 9th position is reserved for someone that it outside of the City limits, but within the Area of Impact. Beutler stated that they also are in need of a Commissioner willing to serve on the County Planning Commission for the City. Beutler asked if anyone is willing and would contact him to discuss it.

Wimborne asked how the conversations went with the County on the Comprehensive Plan. Beutler stated that when

ORDINANCE NO._____

AN ORDINANCE OF THE CITY OF IDAHO FALLS, IDAHO, A MUNICIPAL CORPORATION OF THE STATE OF IDAHO; PROVIDING FOR THE REZONING APPROXIMATELY 20.5 ACRES OF NW 1/4 NE 1/4, SEC 16, T2N, R38 AND LOT 1 & 2, BLOCK 1, LIBERTY PARK AS DESCRIBED IN SECTION 1 OF THIS ORDINANCE FROM HC, HIGHWAY COMMERCIAL, TO LC, LIMITED COMMERCIAL; AND PROVIDING SEVERABILITY, PUBLICATION BY SUMMARY, AND ESTABLISHING EFFECTIVE DATE.

WHEREAS, the proposed zoning district of lands described in Section 1 is LC, Limited Commercial Zone for such annexed lands and such zoning is consistent with the current City of Idaho Falls Comprehensive Plan Land use designation "Higher Density Residential & Commercial"; and

WHEREAS, the proposed zoning district is consistent and compatible with the existing and surrounding zoning districts and is consistent with the City of Idaho Falls Comprehensive Plan; and

WHEREAS, Idaho Falls Planning and Zoning Commission held a duly noticed public hearing on February 1, 2022, and recommended approval of zoning the subject property to LC Zone; and

WHEREAS, the Idaho Falls City Council conducted a duly noticed public hearing and passed a motion to approve this zoning on February 24, 2022.

NOW THEREFORE, BE IT ORDAINED BY THE MAYOR AND COUNCIL OF THE CITY OF IDAHO FALLS, IDAHO, AS FOLLOWS:

SECTION 1: LEGAL DESCRIPTION:

This ordinance shall apply to the following described lands in Idaho Falls, Idaho, Bonneville County, to-wit:

Approximately 20.5 acres of NW 1/4 NE 1/4, Sec 16, T2N, R 38 and Lot 1 & 2, Block 1, Liberty Park

SECTION 2. Zoning. That the property described in Section 1 of this Ordinance be and the same hereby is zoned "LC, Zone" and the City Planner is hereby ordered to make the necessary amendments to the official maps of the City of Idaho Falls which are on file at the City Planning Department Offices, 680 Park Avenue.

SECTION 3. Savings and Severability Clause. The provisions and parts of this Ordinance are intended to be severable. If any section, sentence, clause or phrase of this Ordinance should be held to be invalid or unconstitutional by a court of competent jurisdiction, such invalidity or unconstitutionality shall not affect the validity or constitutionality of any other section, sentence,

clause or phrase of this Ordinance.

SECTION 4. Publication. This Ordinance, or a summary thereof in compliance with Idaho Code, shall be published once in the official newspaper of the City, and shall take effect immediately upon its passage, approval, and publication.

SECTION 5. Effective Date. This Ordinance shall be in full force and effect from and after its passage, approval and publication.

PASSED by the City Council and APPROVED by the Mayor of the City of Idaho Falls, Idaho, this_____day of_____, 2022.

CITY OF IDAHO FALLS, IDAHO

_____
Rebecca L. Noah Casper, Mayor

ATTEST:

_____
Kathy Hampton, City Clerk

(SEAL)

STATE OF IDAHO)
) ss:
County of Bonneville)

I, KATHY HAMPTON, CITY CLERK OF THE CITY OF IDAHO FALLS, IDAHO, DO HEREBY CERTIFY:

> That the above and foregoing is a full, true and correct copy of the Ordinance entitled, "AN ORDINANCE OF THE CITY OF IDAHO FALLS, IDAHO, A MUNICIPAL CORPORATION OF THE STATE OF IDAHO; PROVIDING FOR THE REZONING APPROXIMATELY 20.5 ACRES OF NW 1/4 NE 1/4, SEC 16, T2N, R38 AND LOT 1 & 2, BLOCK 1, LIBERTY PARK AS DESCRIBED IN SECTION 1 OF THIS ORDINANCE FROM HC, HIGHWAY COMMERCIAL, TO LC, LIMITED COMMERCIAL; AND PROVIDING SEVERABILITY, PUBLICATION BY SUMMARY, AND ESTABLISHING EFFECTIVE DATE."

_____

Kathy Hampton, City Clerk

REASONED STATEMENT OF RELEVANT CRITERIA AND STANDARDS

REZONE FROM HC, HIGHWAY COMMERCIAL TO LC, LIMITED COMMERCIAL FOR APPROXIMATELY 20.5 ACRES, NW 1/4 NE 1/4, SEC 16, T2N, R 38 AND LOT 1 & 2, BLOCK 1, LIBERTY PARK, GENERALLY LOCATED NORTH OF KEARNEY ST, EAST OF N WOODRUFF AVE, SOUTH OF LINCOLN RD, WEST OF N 25TH E.

WHEREAS, the applicant filed an application for rezoning on December 30, 2021; and

WHEREAS, this matter came before the Idaho Falls Planning and Zoning Commission during a duly noticed public hearing on February 1, 2022; and

WHEREAS, this matter came before the Idaho Falls City Council during a duly noticed public hearing on February 24, 2022; and

WHEREAS, having reviewed the application, including all exhibits entered and having considered the issues presented:

I. RELEVANT CRITERIA AND STANDARDS

1. The City Council considered the request pursuant to the City of Idaho Falls 2013 Comprehensive Plan, the City of Idaho Falls Zoning Ordinance, the Local Land Use Planning Act, and other applicable development regulations.
2. The property is generally located north of Kearney Street, East of North Woodruff Avenue, South of Lincoln Road, and west of Hitt Road.
3. The Comprehensive Plan designation for this area Higher Density Residential & Commercial.
4. The requested LC Zone is consistent with the Higher Density Residential & Commercial.
5. The Planning and Zoning Commission recommend approval of the rezone from HC to LC Zone.

II. DECISION

Based on the above Reasoned Statement of Relevant Criteria, the City Council of the City of Idaho Falls approved the Rezone.

PASSED BY THE CITY COUNCIL OF THE CITY OF IDAHO FALLS

THIS _____ DAY OF _____, 2022

_____

Rebecca L. Noah Casper, Mayor

Memorandum

File #: 21-422 **City Council Meeting**

FROM: Brad Cramer, Director
DATE: Thursday, February 17, 2022
DEPARTMENT: Community Development Services

Subject
Public Hearing-Part 1 of 2 of the Annexation and Initial Zoning-Annexation Ordinance and Reasoned Statement of Relevant Criteria and Standards for 22.669 acres, Northeast ¼ of Section 31, Township 3 North, Range 38 East.

Council Action Desired

☒ Ordinance ☐ Resolution ☒ Public Hearing
☐ Other Action (Approval, Authorization, Ratification, etc.)

1. Approve the Ordinance annexing 22.669 acres, Northeast ¼ of Section 31, Township 3 North, Range 38 East under a suspension of the rules requiring three complete and separate readings and request that it be read by title and published by summary (or consider the Ordinance on the first reading and that it be read by title, reject the Ordinance, or take other action deemed appropriate).

2. Approve the Reasoned Statement of Relevant Criteria and Standards for the annexation of 22.669 acres, Northeast ¼ of Section 31, Township 3 North, Range 38 East and give authorization for the Mayor to execute the necessary documents (or take other action deemed appropriate).

Description, Background Information & Purpose

Attached is part 1 of 2 of the application for Annexation and Initial Zoning of R3A, Residential Mixed Use with the Airport Overlay Zone of Approach Surface which includes the Annexation Ordinance and Reasoned Statement of Relevant Criteria and Standards for 22.669 acres, Northeast ¼ of Section 31, Township 3 North, Range 38 East. The Planning and Zoning Commission considered this item at its January 4, 2022, meeting and recommended approval by a unanimous vote. Staff concurs with this recommendation.

Alignment with City & Department Planning Objectives

☐ ☒ ☒ ☐ ☒ ☐ ☐ ☐

Consideration of annexation must be consistent with the principles of the Comprehensive Plan which includes many

policies and goals related to Good Governance, Growth, Sustainability, and Livable Communities.

Interdepartmental Coordination

The annexation legal description has been reviewed by the Survey Division.

Fiscal Impact

NA

Legal Review

This application and ordinance have been reviewed by Legal pursuant to applicable law.

Annexation and Initial Zoning

ANNX21-019 N 5th E - R3A

Legend

- ANNX21-019
- City Limit

Zoning

- RE
- RP
- R1
- R2
- TN
- RMH
- R3
- R3A
- PB
- CC
- LC
- HC
- R&D
- LM
- I&M
- P

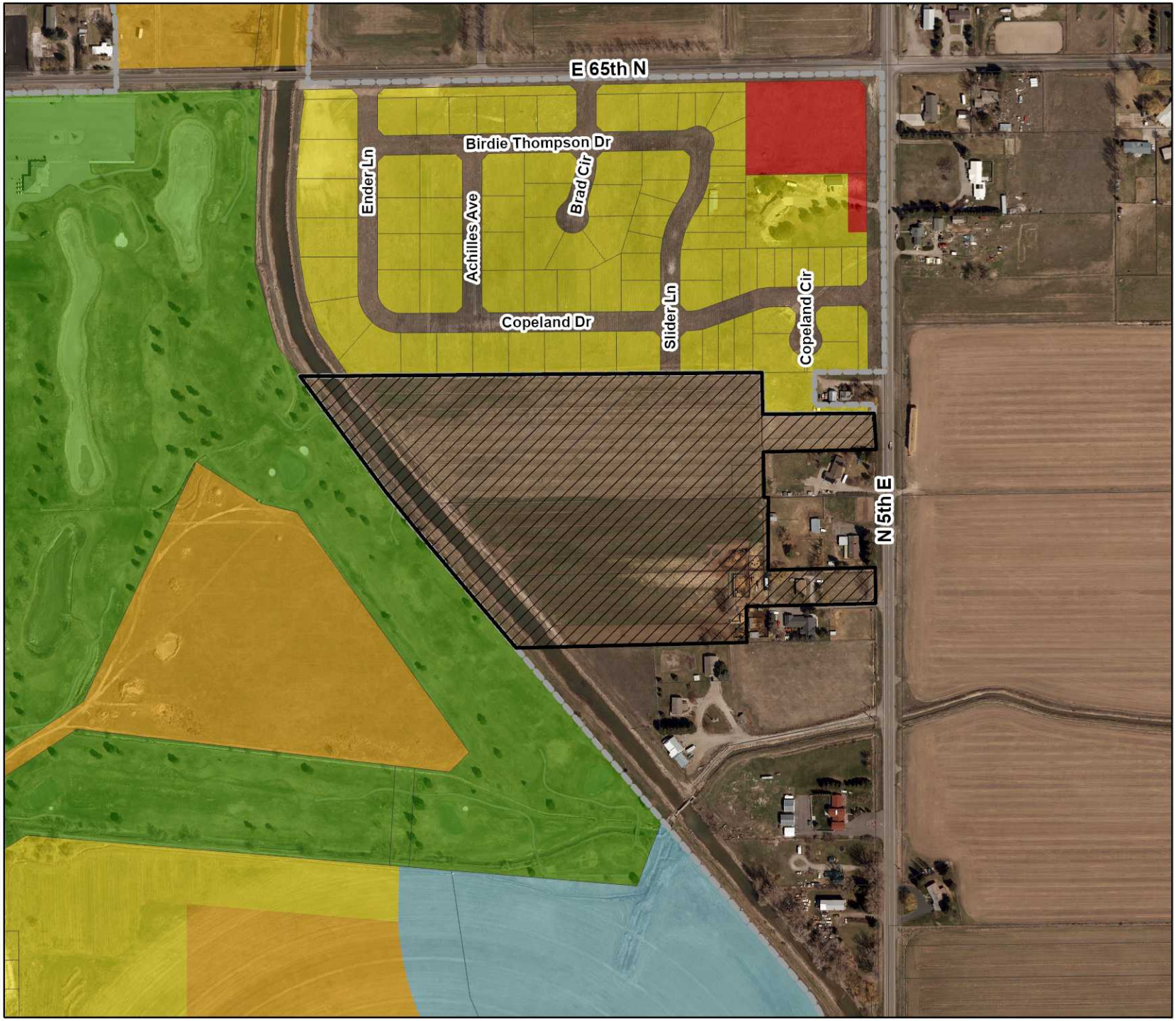

IDAHO FALLS

Planning Division
City Annex Building
680 Park Ave.
Idaho Falls, ID 83402
(208) 612-8276

N

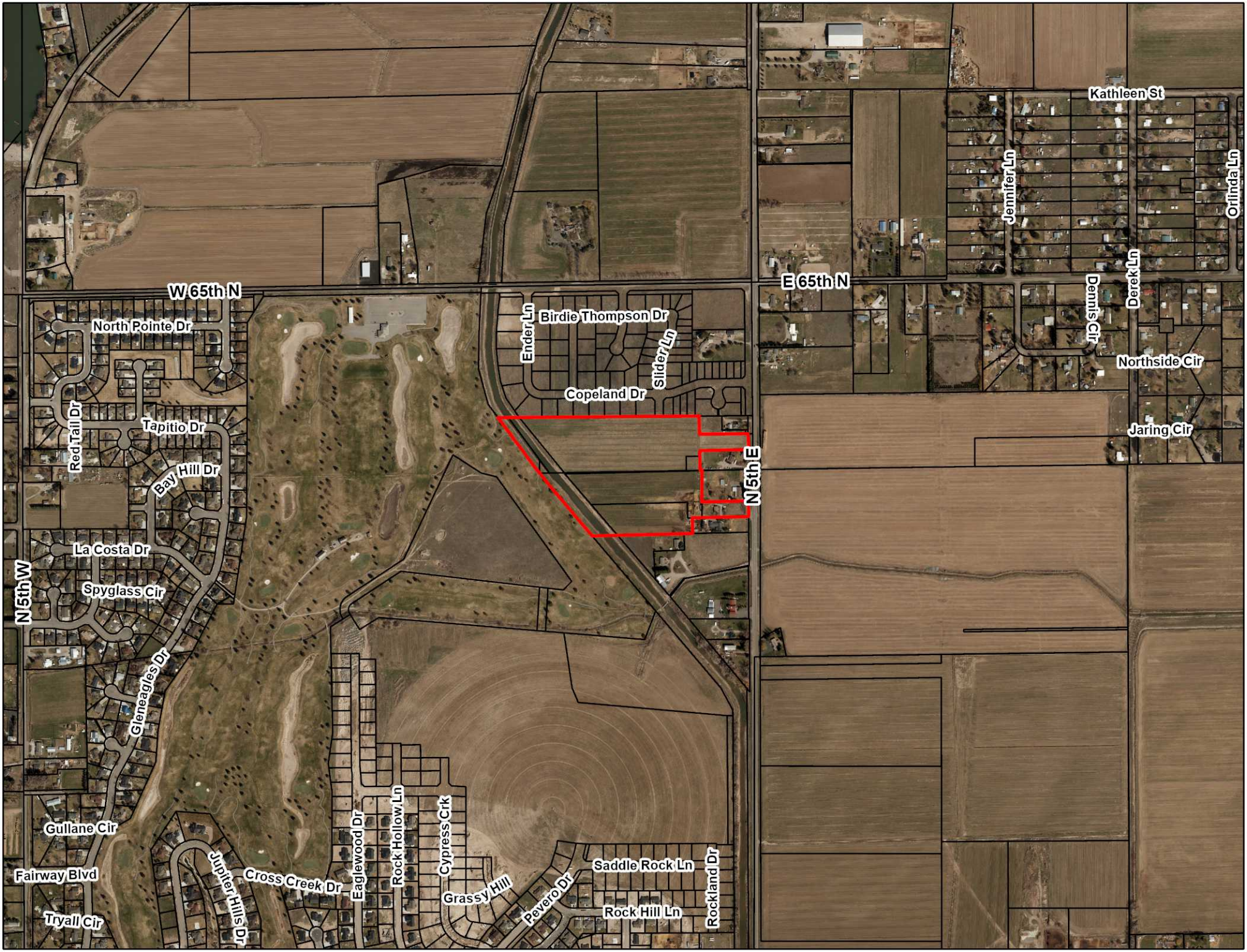
W 65th N
E 65th N
N 5th W
N 5th E
North Pointe Dr
Red Tail Dr
Tapitio Dr
Bay Hill Dr
La Costa Dr
Spyglass Cir
Gleneagles Dr
Gullane Cir
Fairway Blvd
Tryall Cir
Jupiter Hills Dr
Cross Creek Dr
Eaglewood Dr
Rock Hollow Ln
Cypress Crk
Grassy Hill
Pevero Dr
Saddle Rock Ln
Rock Hill Ln
Rockland Dr
Ender Ln
Birdie Thompson Dr
Slider Ln
Copeland Dr
Kathleen St
Jennifer Ln
Dennis Cir
Derek Ln
Orlinda Ln
Northside Cir
Jaring Cir

Annexation and Initial Zoning

ANNX21-019 N 5th E - R3A

- Estate
- Low Density
- Higher Density
- Greenbelt Mixed Uses
- Parks and Recreation
- Public Facilities and Open Spaces
- Commercial
- Employment Centers
- Medical Services Centers
- Higher Education Centers
- Planned Transition
- Highway-related industrial
- Railroad-related industrial

Comprehensive Plan

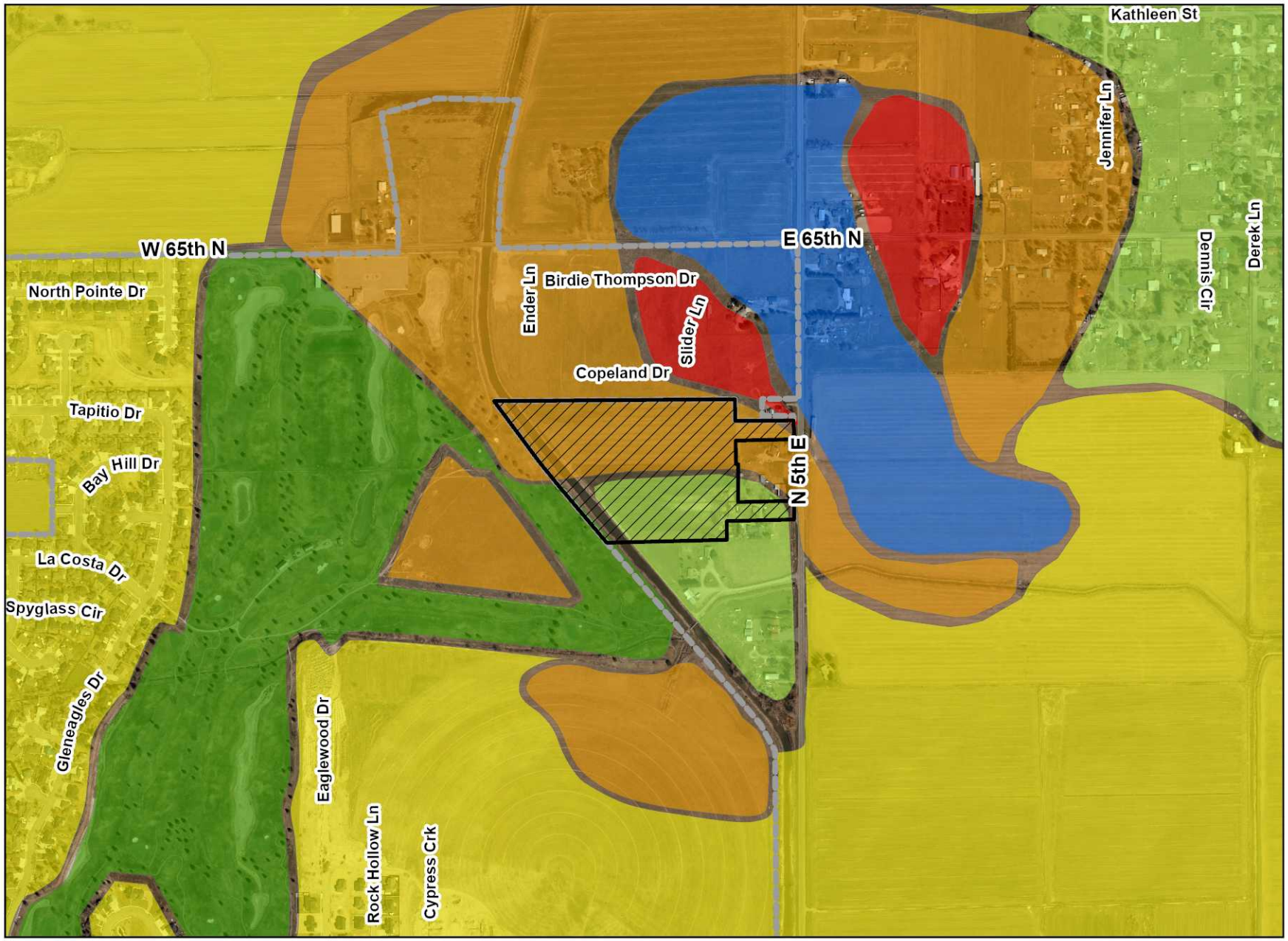

IDAHO FALLS

Planning Division
City Annex Building
680 Park Ave.
Idaho Falls, ID 83402
(208) 612-8276

N

STAFF REPORT
ANNEXATION AND INITIAL ZONING
Annex & Initial Zoning of R3A and the Airport Overlay Zone
22.669 Acres in the NE ¼ of Section 31, T 3N, R 38E
February 24, 2022

IDAHO FALLS
Community Development Services

Applicant: HLE, Inc

Project Manager: Naysha Foster

Location: Generally, north of Saddle Rock Ln, east of N 5th W, south of W 65th N, west of N 5th E

Size: 22.669 Acres

Existing Zoning: County A-1
North: R1
South: County A-1
East: County A-1
West: P

Proposed Zoning: R3A

Existing Land Uses:
Site: Ag
North: Vacant
South: Residential
East: Ag
West: Golf Course

Future Land Use Map:
Higher Density and Estate

Attachments:
1. Comprehensive Plan Policies
2. Zoning Information
3. Maps and Aerial Photos

Requested Action: To approve the annexation and initial zoning of R3A, Residential Mixed Use.

Annexation: This is a Category "A" annexation as it is requested by the property owner. The property is within the Area of Impact and contiguous to city limits on the north and west sides. The property Annexation of the property is consistent with the City's Comprehensive Plan.

Initial Zoning: The proposed zoning is R3A. The Comprehensive Plan identifies this area as Higher Density and Estate. This property is currently zoned A-1 in the County, an agricultural zone. The Airport Overlay zone is Approach Surface Zone and allows for residential and commercial uses.

Staff Comments: The proposed R3A Zone allows a mix of uses in the primary use of the land for residential purposes, but in which office buildings and certain other uses of a semi-commercial nature may be located. Characteristics of the zone is a greater amount of automobile traffic, greater density and a wider variety of dwelling types. Utilities will need to be extended but are in the vicinity. The property is adjacent to 5th E, a Principal Arterial.

Staff Recommendation: Staff and the Planning and Zoning Commission recommend approval of the annexation and initial zoning of R3A as it is consistent with the policies of the Comprehensive Plan.

Comprehensive Plan Policies:

Residential development should reflect the economic and social diversity of Idaho Falls.

Higher density housing should be located closer to service areas and those streets designed to move traffic, such as arterials and collectors, with access only to the collector streets. (p. 48)

Encourage development in areas served by public utilities or where extension of facilities are least costly. (p. 67)

Zoning Ordinance:

11-3-3: PURPOSE OF RESIDENTIAL ZONES

(G) R3A Residential Mixed Use Zone. To provide for a mix of uses in which the primary use of the land is for residential purposes, but in which office buildings and certain other uses of a semi-commercial nature may be located. Characteristic of this Zone is a greater amount of automobile traffic, greater density, and a wider variety of dwelling types and uses than is characteristic of the R3 Residential Zone. While office buildings and certain other uses of a semi-commercial nature may be located in the Zone, the R3A Zone is essentially residential in character. Therefore, all uses must be developed and maintained in harmony with residential uses. This zone should be located along major streets such as arterials and collectors.

11-3-4: STANDARDS FOR RESIDENTIAL ZONES.

Table 11-3-1: Standards for Residential Zones

	RE	RP	R1	R2	TN	R3	R3A	RMH
Lot Area								
Lot Area Minimum in ft^2	1 acre*	12,000	7,000	6,000*	3,000*	5,000*	5,000	5,000
Lot Area Maximum in ft^2			13,500*					
Site Width								
Site Width at Front Setback, Minimum in ft.	150	60	50	50	25	50	50	50
Setbacks, Minimum in ft.								
Front	40	30*	25*	20*	15*	15	15	30
Front Maximum in ft.					20*			
Side	20	7.5/10*	6	6	5	6	6	10
Rear	40	25	25	25	10	25*	25*	25*
Lot Coverage, Building Height, and Density								
Maximum Lot Coverage in %	30	40	40	80	50	80	80	40
Maximum Building Height in ft*	24	24	24	36	*			24
Maximum Density in net units/acre	1	4	6	17	15	35	35	8
*See explanations, exceptions and qualifications in Section 11-3-4A,B,C of this Zoning Code.								

11-2-3: ALLOWED USES IN RESIDENTIAL ZONES.

Table 11-2-1: Allowed Uses in Residential Zones

P = permitted use. C1 = administrative conditional use. C2 = Planning Commission conditional use. C3 = City Council conditional use. A blank denotes a use that is not allowed in that zone.

*Indicates uses that are subject to specific land use provisions set forth in the Standards for Allowed Land Uses Section of this Chapter.

	Low Density Residential			Medium Density Residential			High Density Residential	
Proposed Land Use Classification	**RE**	**RP**	**R1**	**R2**	**TN**	**RMH**	**R3**	**R3A**
Accessory Use	P	P	P	P	P	P	P	P
Agriculture*	P							
Animal Care Clinic					P*			P
Artist Studio					P*			
Bed and Breakfast*								P
Boarding /Rooming House							P	P
Day Care, Center*			C_2	P	P		P	P
Day Care, Group*	C_1		C_1	P	P	C_1	P	P
Day Care, Home	C_1		C_1	P	P	C_1	P	P
Dwelling, Accessory Unit*	P			P	P		P	P
Dwelling, Multi-Unit*				P*	P		P	P
Dwelling, Multi-Unit Attached*				P	P		P	P
Dwelling, Single Unit Attached*			P	P	P	P	P	P
Dwelling, Single Unit Detached	P	P	P	P	P	P	P	P
Dwelling, Two Unit				P	P		P	P
Eating Establishment, Limited					P*			P
Financial Institutions					P*			P
Food Processing, Small Scale					P*			
Food Store					P*			
Fuel Station					P*			
Health Care and Social Services					P*			P
Home Occupation*	C_1		C_1	C_1	C_1	C_1	C_1	C_1
Information Technology								P
Laundry and Dry Cleaning					P*			P
Live-Work*					C_1			P
Manufactured Home*	P	P	P	P	P	P	P	P
Mobile Home Park*						C_2		C_2
Mortuary								P
Park and Recreation Facility*	P	P	P	P	P	P	P	P
Parking Facility								P
Personal Service					P*			P
Planned Unit Development*	C_3	C_3	C_3	C_3		C_3	C_3	C_3
Professional Service								P
Public Service Facility*	C_2	C_2	C_2	C_2	C_2	C_2	C_2	C_2
Public Service Facility, Limited	P	P	P	P	P	P	P	P
Public Service Use								P

Recreational Vehicle Park*						C_2		
Proposed Land Use Classification	**RE**	**RP**	**R1**	**R2**	**TN**	**RMH**	**R3**	**R3A**
Religious Institution*	C_2	C_2	C_2	C_2	C_2	C_2	C_2	C_2
Residential Care Facility							P	P
Retail					P*			C_2
School	C_2	C_2	C_2	C_2	C_2	C_2	C_2	C_2
Short Term Rental*	P	P	P	P	P	P	P	P
Transite Station								P

(Ord. 3218, 9-13-18) (Ord. 3358, 12-10-20)

11-2-4: ALLOWED USES IN COMMERCIAL ZONES.

Table 11-2-2: Allowed Uses in Commercial Zones

P = permitted use. C1 = administrative conditional use. C2 = Planning Commission conditional use. C3 = City Council conditional use. A blank denotes a use that is not allowed in that zone.

*Indicates uses that are subject to specific land use provisions set forth in the Standards for Allowed Land Uses Section of this Chapter.

	Commercial				
Proposed Land Use Classification	**PB**	**CC**	**LC**	**HC**	**PT**
Accessory Use*	P	P	P	P	P
Accessory Use, Fuel Station*		P	P	P	
Accessory Use, Storage Yard*		P	P	P	
Amusement Center, Indoor		P	P	P	
Amusement Center, Indoor Shooting Range*		P	P	P	
Amusement Center, Outdoor*				P	
Animal Care Clinic*	P	P	P	P	
Animal Care Facility*				P	
Bed and Breakfast*		P	P		P
Boarding /Rooming House		P	P		P
Building Material, Garden and Farm Supplies			P	P	
Cemetery*		C_2	C_2	C_2	
Club*		P	P	P	
Communication Facility		P	P	P	
Day Care, all Types*	P	P	P	P	P
Drinking Establishment		P		P	
Drive-through Establishment *	P*	P	P	P	P
Dwelling, Accessory Unit *		P	P	P	P
Dwelling, Multi-Unit*		P	P		P
Dwelling, Multi-Unit Attached*		P	P		P
Dwelling, Single Unit Atached*			P		
Dwelling, Single Unit Detached			P		
Dwelling, Two Unit			P		P
Eating Establishment		P	P	P	P
Eating Establishment, Limited	P	P	P	P	P

(11) Uses listed as not compatible in Table 11-5-6: Compatible Uses in the Airport Overlay, may beconsidered compatible when:

(a) The use was approved prior to the approval of this Section.

(b) The FAA Form 7460.1, Notice of Proposed Construction or Alteration determines that there is "no objection" or "no objection with provisions" for the use.

(c) The requirements of the most restrictive Zone are applied.

Table 11-5-6: Compatible Uses in the Airport Overlay

"N" denotes a use that is not compatible and is prohibited.
"Y" denotes a use that is compatible.
"C" denotes a use that is compatible that meets one or more of the following indicated conditions where applicable:

a. Residential densities must be less than nine (9) units per acre for areas of parcels located within the sixty fi ve (65) decibel limit on the IFRA Noise Contours Map (located in the City's Planning Division)
b. Structures shall be shifted away from runway centerline when possible
c. A recorded avigation easement is required
d. A recorded avigation easement is required if within one thousand feet (1000') of the runway.
e. Permitted uses will not create bodies of water, or generate smoke, steam, or other visual obstruction
f. An Airport Disclosure Note is required on plats recorded after the adoption of this Section.

Compatable Land Uses				
Land Use	No Development	Limited Development Approach Surface	Controlled Development Approach	Limited Development
Accessory use	N	C[c,f]	Y	Y
Adult Business	N	C[c,f]	Y	Y
Agriculture	N	Y	Y	Y
Agriculture Tourism	N	C[c,f]	Y	Y
Airport	Y	Y	Y	Y
Amusement Center, Indoor	N	N	Y	Y
Amusement Center, Indoor Shooting Range	N	N	Y	Y
Amusement Center, Outdoor	N	C[c,e,f]	C[e]	Y
Animal Care Clinic	N	C[C,F]	Y	Y
Animal Care Facility	N	C[c,f]	Y	Y
Artist Studio	N	C[b,c,e,f]	C[e]	C[e]
Auction, livestock	N	C[c,e,f]	Y	Y
Bed and Breakfast	N	N	C[a,b,f]	C[d,f]
Boarding /Rooming House	N	N	C[a,b,f]	C[d,f]
Building Contractor Shop	N	C[b,c,f]	Y	Y
Building Material, Garden and Farm Supplies	N	C[b,c,f]	Y	Y
Cemetery	N	C[c,e,f]	C[e]	Y
Club	N	N	Y	Y
Communication Facility	N	C[b,c,e,f]	Y	Y
Correctional Facility or Jail	N	C[b,c,e,f]	C[b,e]	Y
Day Care, all Types	N	C[b,c,f]	Y	Y
Drinking Establishment	N	C[b,c,f]	Y	Y

Compatable Land Uses				
Land Use	No Development	Limited Development Approach Surface	Controlled Development Approach	Limited Development
Drive-through Establishment	N	C[b,c,f]	Y	Y
Dwelling, accessory unit	N	N	C[a,b,f]	C[d,f]
Dwelling, multi-unit	N	N	C[a,b,f]	C[d,f]
Dwelling, single unit attached	N	N	C[a,b,f]	C[d,f]
Dwelling, single unit detached	N	N	C[a,b,f]	C[d,f]
Dwelling, two unit	N	N	C[a,b,f]	C[d,f]
Eating Establishment	N	C[b,c,f]	Y	Y
Eating Establishment, limited	N	C[b,c,f]	Y	Y
Equipment Assembly	N	C[b,c,e,f]	C[b,e]	C[e]
Entertainment and Cultural Facilities	N	N	Y	C[e]
Equipment Sales, Rental and Services	N	C[b,c,f]	Y	Y
Financial Institutions N	N	C[b,c,f]	Y	Y
Food Processing, small scale	N	C[b,c,e,f]	C[b,e]	C[e]
Food Processing N Cb,c,e,f Cb,e Ce	N	C[b,c,e,f]	C[b,e]	C[e]
Food Store N Cb,c,f Y Y	N	C[b,c,f]	Y	Y
Fuel Station N Cb,c,f Y Y	N	C[b,c,f]	Y	Y
Fuel Station, super N Cb,c,f Y Y	N	C[b,c,f]	Y	Y
Health Care and Social Services N N Y Y	N	N	Y	Y
Higher Education Center N Cb,c,f Y Y	N	C[b,c,f]	Y	Y
Home Occupation N N Y Y	N	N	Y	Y
Hospital N Cb,c,f Y Y	N	C[b,c,f]	Y	Y
Industry, Craftsman N Cb,c,e,f Cb,e Ce	N	C[b,c,e,f]	C[b,e]	C[e]
Industry, Heavy N Cb,c,e,f Cb,e Ce	N	C[b,c,e,f]	C[b,e]	C[e]
Industry, Light N Cb,c,e,f Cb,e Ce	N	C[b,c,e,f]	C[b,e]	C[e]
Information Technology N Cb,c,f Y Y	N	C[b,c,f]	Y	Y
Laundry and Dry Cleaning N Cb,c,f Y Y	N	C[b,c,f]	Y	Y
Live-Work	N	N	C[a,b,f]	C[d,f]
Lodging Facility	N	N	C[a,b,f]	C[d,f]
Manufactured Home	N	N	C[a,b,f]	C[d,f]
Medical Support Facility	N	C[b,c,f]	Y	Y
Mobile Home Park	N	N	C[a,b]	C[d,f]
Mortuary	N	N	Y	Y
Park and Recreation Facility	N	N	Y	Y
Parking Facility	C[b,c,e,f]	C[b,c,f]	Y	Y
Pawn Shop	N	C[b,c,f]	Y	Y
Personal Service	N	C[b,c,f]	Y	Y
Planned Unit Development	N	N	C[a,d,f]	C[d,f]
Professional Service	N	C[b,c,f]	Y	Y
Public Service Facility	C[b,c,e,f]	C[b,c,e,f]	C[b,e]	C[e]

Compatable Land Uses				
Land Use	No Development	Limited Development Approach Surface	Controlled Development Approach	Limited Development
Public Service Facility, limited	C[b,c,e,f]	C[b,c,e,f]	C[b,e]	C[e]
Public Service Use	C[b,c,e,f]	C[b,c,e,f]	C[b,e]	C[e]
Railroad Freight Terminal and Station	C[b,c,e,f]	C[b,c,f]	Y	Y
Recreational Vehicle Park	N	N	C[a,b,f]	C[d,f]
Religious Institution	N	N	Y	Y
Research and Development	N	C[b,c,e,f]	C[b,e]	C[e]
Residential Care Facility	N	N	C[a,b,f]	C[d,f]
Retail	N	C[b,c,f]	Y	Y
School	N	C[b,c,f]	Y	Y
Short Term Rental	N	N	C[a,b,f]	C[d,f]
Storage Facility, Indoor	N	C[b,c,f]	Y	Y
Storage Facility, self serve	N	C[b,c,f]	Y	Y
Storage Yard	N	C[b,c,f]	Y	Y
Terminal Yard, trucking and bus	C[b,c,e,f]	C[b,c,f]	Y	Y
Transit Station	C[b,c,e,f]	C[b,c,f]	Y	Y
Vehicle Body Shop	N	C[b,c,f]	Y	Y
Vehicle Repair and Service	N	C[b,c,f]	Y	Y
Vehicle Sales and Rentals	N	C[b,c,f]	Y	Y
Vehicle Washing Facility	N	C[b,c,f]	Y	Y
Warehouse	N	C[b,c,f]	Y	Y
Warehouse, Wholesale with flammable materials	N	N	C[b]	Y

(C) Airport Overlay Height Zone Limitations. In order to support the provisions of this Chapter, there are hereby created and established certain Height Zones, which Zones include all of the land and airspace above the surface of the land. Such Height Zones shall be known respectively as the Approach Surface Height Zone, Transitional Surface Height Zone, Horizontal Surface Height Zone and Conical Surface Height Zone. Such Height Zones are shown on the Idaho Falls Regional Airport Height Limitations Map, located in the City's Planning Division.

(1) Establishment of Airport Height Zones: Each portion of a parcel located in more than one (1) of the following Height Zones shall be evaluated independently. The various zones are hereby established and defi ned as follows:

(a) Approach Surface Height Zone. The inner edge of this Zone coincides with the width of the primary surface and is one thousand (1,000) feet wide. The Approach Surface Height Zone expands outward uniformly from the edge of the runway to a width of sixteen thousand (16,000) feet at a horizontal distance of fifty thousand (50,000) feet. Its centerline is the continuation of the centerline of the runway.

(b) Transitional Surface Height Zone. The Transitional Surface Height Zone is the areas beneath the transitional surfaces.

(c) Horizontal Surface Height Zone. The Horizontal Surface Height Zone is established by

Legend

IFRA Off Airport Land Use

Compatible Land Use

- Approach Surface
- Controlled Development
- Controlled Development Approach Surface
- Limited Development
- Limited Development Approach Surface
- No Development
- Parcel
- City Limit
- Street Names
- ANNX21-019

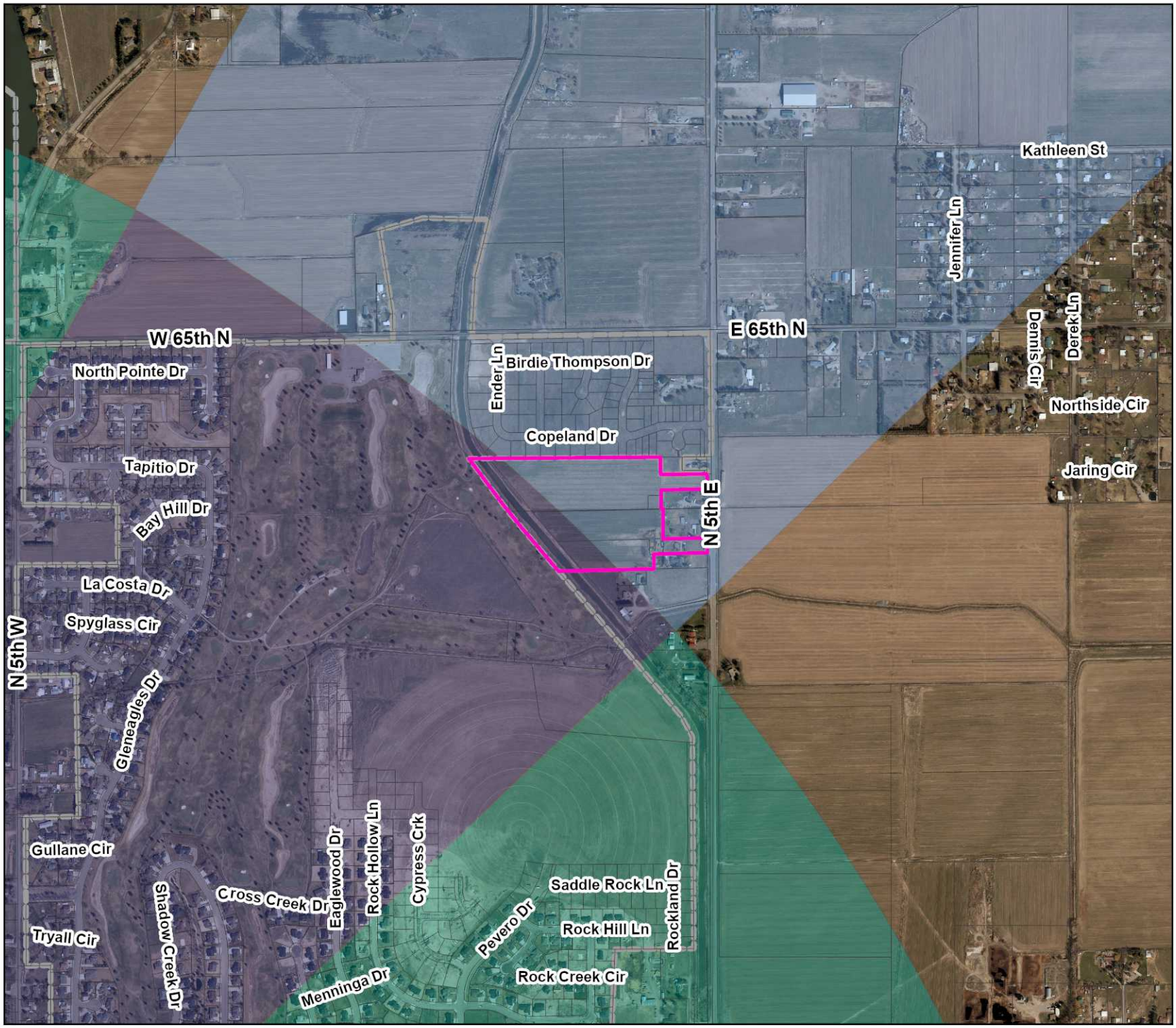

IDAHO FALLS

Planning Division
City Annex Building
680 Park Ave.
Idaho Falls, ID 83402
(208) 612-8276

N

Legend

Surface Type

- Approach Surface
- Conical Surface
- Horizontal Surface
- Primary Surface
- Transitional Surface
- Parcel
- City Limit
- Street Names
- ANNX21-019

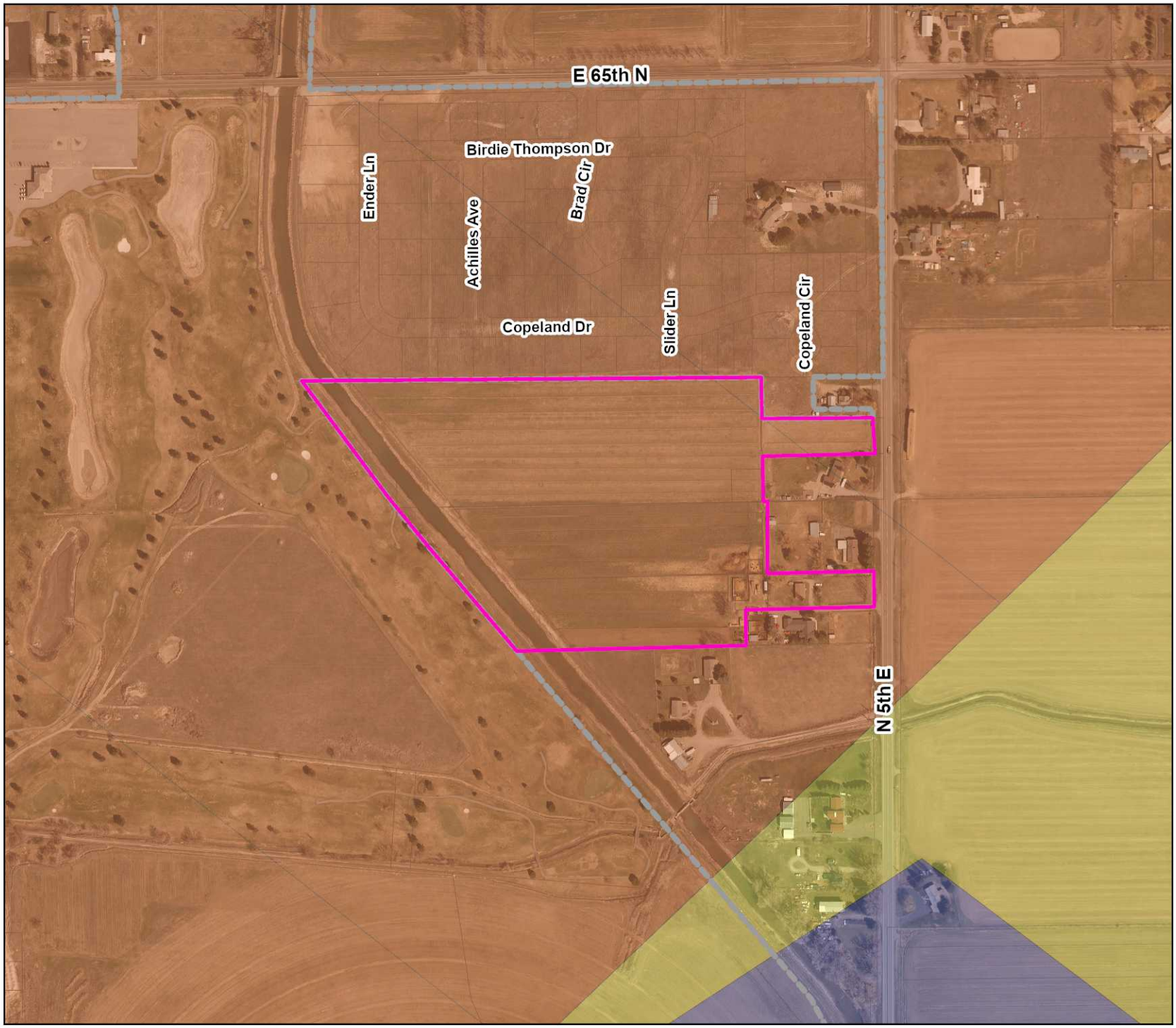

IDAHO FALLS

Planning Division
City Annex Building
680 Park Ave.
Idaho Falls, ID 83402
(208) 612-8276

N

January 4, 2022 7:00 p.m. Planning Department

City Annex Building

MEMBERS PRESENT: Commissioners Brent Dixon, Arnold Cantu, George Morrison, Margaret Wimborne, Joanne Denney

MEMBERS ABSENT: Lindsey Romankiw

ALSO PRESENT: Planning Director Brad Cramer, Assistant Planning Director Kerry Beutler, planners Naysha Foster and Caitlin Long and interested citizens.

CALL TO ORDER: Brent Dixon called the meeting to order at 7:00 p.m.

CHANGES TO AGENDA: None.

MINUTES: Denney moved to approve the Minutes from December 7, 2021, Morrison seconded the motion and it passed unanimously.

Public Hearing(s):

Public Hearing(s):

2. ANNX 21-019: ANNEXATION/INITIAL ZONING. Annexation and Initial Zoning of R3A for approximately 22.669 Acres.

Dixon opened the public hearing.

Applicant: Gilmore Jenkins, HLE, 101 S. Park, Idaho Falls, Idaho. Jenkins presented the property that is approximately 23 acres south of 65th and West of 5th and east of the Idaho Canal. Jenkins presented that the property would have 2 points of access off of Lewisville to ensure good access to a major arterial which is needed for R3A zoning. Jenkins stated that they are requesting R3A which is consistent with the Comprehensive Plan.

Morrison asked if they are going to put a bridge across the canal as the property line appears to cross the canal.

Jenkins stated that the annexation includes the canal, but the property line does not include the canal, so they have no plans to have a bridge into the golf course.

Foster presented the staff report, a part of the record.

Wimborne asked about the zoning toward the residential development that has 65th on one end and borders the property is R1. Foster agreed that is zoned R1 and the corner piece is limited commercial which would allow for high density residential as well as commercial.

Dixon asked if most of the utilities are in the arterials of 65th and 5th East. Foster indicated that there is water in 5th East and sewer in the subdivision to the south. Foster stated that there is some sewer that has been stubbed to the proposed development to the north, and utilities along the west side. Dixon clarified that the platted development to the north has not developed. Foster agreed that the development has not been constructed.

No one appeared in Support/Opposition.

Dixon closed the public hearing.

Morrison feels this is straight forward and he is glad to see development in this area.

Morrison moved to recommend to the Mayor and City Council approval of the annexation of 22.669 acres in the NE ¼ Section of 31, T 3N, R 38 E with an initial zoning of R3A and the Airport Overlay Zone, Wimborne seconded the motion. Dixon called for roll call vote: Wimborne, yes; Denney, yes; Cantu, yes; Morrison yes. The motion passed unanimously.

ORDINANCE NO. _____

AN ORDINANCE OF THE CITY OF IDAHO FALLS, IDAHO, A MUNICIPAL CORPORATION OF THE STATE OF IDAHO; PROVIDING FOR THE ANNEXATION OF APPROXIMATELY 22.669 ACRES DESCRIBED IN EXHIBIT A OF THIS ORDINANCE, AMENDING THE LEGAL DESCRIPTION OF THE CITY WITH THE APPROPRIATE COUNTY AND STATE AUTHORITIES; AND PROVIDING SEVERABILITY, PUBLICATION BY SUMMARY, AND ESTABLISHING EFFECTIVE DATE.

WHEREAS, the lands described in Exhibit A of this Ordinance are contiguous and adjacent to the City limits of the City of Idaho Falls, Idaho; and

WHEREAS, such lands described herein are subject to annexation to the City pursuant to the provisions of Idaho Code Section 50-222, and other laws, as amended; and

WHEREAS, the annexation of the lands described in Exhibit A is reasonably necessary to assure the orderly development of the City in order to allow efficient and economically viable provision of tax-supported and fee-supported municipal services; to enable the orderly development of private lands which benefit from a cost-effective availability of City services in urbanizing areas; and to equitably allocate the costs of City/public services in management of development on the City's urban fringe; and

WHEREAS, the City has authority to annex lands into the City pursuant to procedures of Idaho Code Section 50-222, as amended; and

WHEREAS, any portion of a highway lying wholly or partially within the lands to be annexed are included in the lands annexed by this Ordinance; and

WHEREAS, the lands annexed by this Ordinance are not connected to the City only by a "shoestring" or a strip of land which comprises a railroad or right-of-way; and

WHEREAS, all private landowners have consented to annexation of such lands, where necessary; and

WHEREAS, City of Idaho Falls Comprehensive Plan includes the area of annexation; and

WHEREAS, after considering the written and oral comments of property owners whose lands would be annexed and other affected persons, City Council specifically makes the following findings:

1) That the lands annexed meet the applicable requirements of Idaho Code Section 50-222 and does not fall within exceptions or conditional exceptions contained in Idaho Code Section 50-222;

2) The annexation is consistent with public purposes addressed in annexation and related plans prepared by the City; and

3) Annexation of the lands described in Section 1 are reasonably necessary for the orderly development of the City; and

WHEREAS, it appears to the Council that the lands described herein below in Exhibit A of this Ordinance should be annexed to and become a part of the City of Idaho Falls, Idaho; and

WHEREAS, the City wishes to exercise jurisdiction over the annexed lands in a way that promotes the orderly development of such lands; and

WHEREAS, the City of Idaho Falls Comprehensive Plan sets out policies and strategies designed to promote and sustain future growth within the City; and

WHEREAS, such designation is consistent with policies and principles contained within the City of Idaho Falls Comprehensive Plan; and

WHEREAS, the City desires the City of Idaho Falls Comprehensive Plan Map to be amended to reflect the designation contained in this Ordinance.

NOW THEREFORE, BE IT ORDAINED BY THE MAYOR AND COUNCIL OF THE CITY OF IDAHO FALLS, IDAHO, as follows:

SECTION 1. Annexation of Property. The lands described in Exhibit A are hereby annexed to the City of Idaho Falls, Idaho.

SECTION 2. Amended Map and Legal Description. The City Clerk shall file a certified copy of this Ordinance with the Bonneville County Auditor, Treasurer, and Assessor, within ten (10) days after the effective date hereof. The City Engineer shall, within ten (10) days after such effective date, file an amended legal description and map of the City, with the Bonneville County Recorder and Assessor and the Idaho State Tax Commission, all in accordance with Idaho Code Section 63-2215.

SECTION 3. Findings. The findings contained in the recitals of this Ordinance be, and the same are hereby adopted as the official City Council findings for this Ordinance, and any further findings relative to this Ordinance shall be contained in the officially adopted Council minutes of the meeting in which this Ordinance was passed.

SECTION 4. Savings and Severability Clause. The provisions and parts of this Ordinance are intended to be severable. If any section, sentence, clause or phrase of this Ordinance should be held to be invalid or unconstitutional by a court of competent jurisdiction, such invalidity or unconstitutionality shall not affect the validity or constitutionality of any other section, sentence, clause or phrase of this Ordinance.

SECTION 5. Publication. This Ordinance, or a summary thereof in compliance with Idaho Code, shall be published once in the official newspaper of the City, and shall take effect immediately upon its passage, approval, and publication.

SECTION 6. Effective Date. This Ordinance shall be in full force and effect from and after its passage, approval and publication.

PASSED BY THE COUNCIL AND APPROVED BY THE MAYOR this_____day of _____, 2022.

_____
Rebecca L. Noah Casper, Mayor

ATTEST:

_____
Kathy Hampton, City Clerk

(SEAL)

STATE OF IDAHO)
: ss.
County of Bonneville)

I, KATHY HAMPTON, CITY CLERK OF THE CITY OF IDAHO FALLS, IDAHO, DO HEREBY CERTIFY:

That the above and foregoing is a full, true and correct copy of the Ordinance entitled: "AN ORDINANCE OF THE CITY OF IDAHO FALLS, IDAHO, A MUNICIPAL CORPORATION OF THE STATE OF IDAHO; PROVIDING FOR THE ANNEXATION OF APPROXIMATELY 22.669 ACRES DESCRIBED IN EXHIBIT A OF THIS ORDINANCE, AMENDING THE LEGAL DESCRIPTION OF THE CITY WITH THE APPROPRIATE COUNTY AND STATE AUTHORITIES; AND PROVIDING SEVERABILITY, PUBLICATION BY SUMMARY, AND ESTABLISHING EFFECTIVE DATE."

_____

Kathy Hampton, City Clerk

(SEAL)

Exhibit "A"

LEGAL DESCRIPTION (Page 1 of 1)

ANNEXATION IN A PORTION OF THE NE1/4 OF SECTION 31, T. 3N., R 38 E.B.M., BONNEVILLE COUNTY , IDAHO

COMMENCING AT THE EAST 1/4 CORNER OF SAID SECTION 31; THENCE N 00º27'16" W 986.62 FEET ALONG THE EAST SECTION LINE; THENCE S89º23'44"W 33.00 FEET TO THE WESTERLY RIGHT-OF-WAY OF 5TH EAST AND THE POINT OF BEGINNING; THENCE S88°38'44"W 396.50 FEET; THENCE S00°27'15"E 109.96 FEET; THENCE S88°38'27"W 704.97 FEET TO THE NORTHEASTERLY LINE OF CITY OF IDAHO FALLS ANNEXATION ORDINANCE 2062; THENCE NORTHWESTERLY, ALONG SAID ORDINANCE THE FOLLOWING TWO (2) COURSES; 1) THENCE N40°14'36"W 555.14 FEET; 2) THENCE N36°38'08"W 507.72 FEET TO THE SOUTHERLY LINE OF CITY OF IDAHO FALLS ANNEXATION ORDINANCE 2749; THENCE EASTERLY ALONG SAID ORDINANCE THE FOLLOWING FOUR (4) COURSES; 1) THENCE N89°32'06"E 1163.10 FEET; 2) THENCE N89°33'58"E 250.90 FEET; 3) THENCE S01°00'29"E 127.51 FEET; 4) THENCE N89°32'06" E 340.93 FEET TO SAID WESTERLY RIGHT-OF-WAY OF 5TH EAST THENCE S01°17'15" E 110.72 FEET ALONG SAID RIGHT-OF-WAY; THENCE S88°42'45"W 341.46 FEET; THENCE S01°01'10" E 139.15 FEET; THENCE N88°30'19" E 10.69 FEET; THENCE S00°26'59" E 222.28 FEET; THENCE N88°38'44" E 328.00 FEET TO SAID WESTERLY RIGHT-OF-WAY OF 5TH EAST; THENCE S00°27'05" E 110.00 FEET ALONG SAID WESTERLY RIGHT-OF-WAY OF 5TH EAST TO THE POINT OF BEGINNING.

PARCEL CONTAINS 22.669 ACRES, MORE OR LESS.

Submitted by:

Eng/Survey Firm Name: HLE

Contact Name: Clint Jolley

Phone Number: 208-524-0212

Email: clintj@hleinc.com

Overall Document Page Range:_____of_____

PLS Seal:

PROFESSIONAL LAND SURVEYOR
LICENSED
15571
1/24/22
STATE OF IDAHO
CLINT M. JOLLEY

ORIGINAL

ORDINANCE RECORDED WITH THE
BONNEVILLE COUNTY RECORDERS OFFICE
AS INSTRUMENT NO. _____

CITY OF IDAHO FALLS
BONNEVILLE COUNTY
PART OF SECTION 31, T. 3 N., R. 38 E.B.M.

ANNEX ORDINANCE
_____

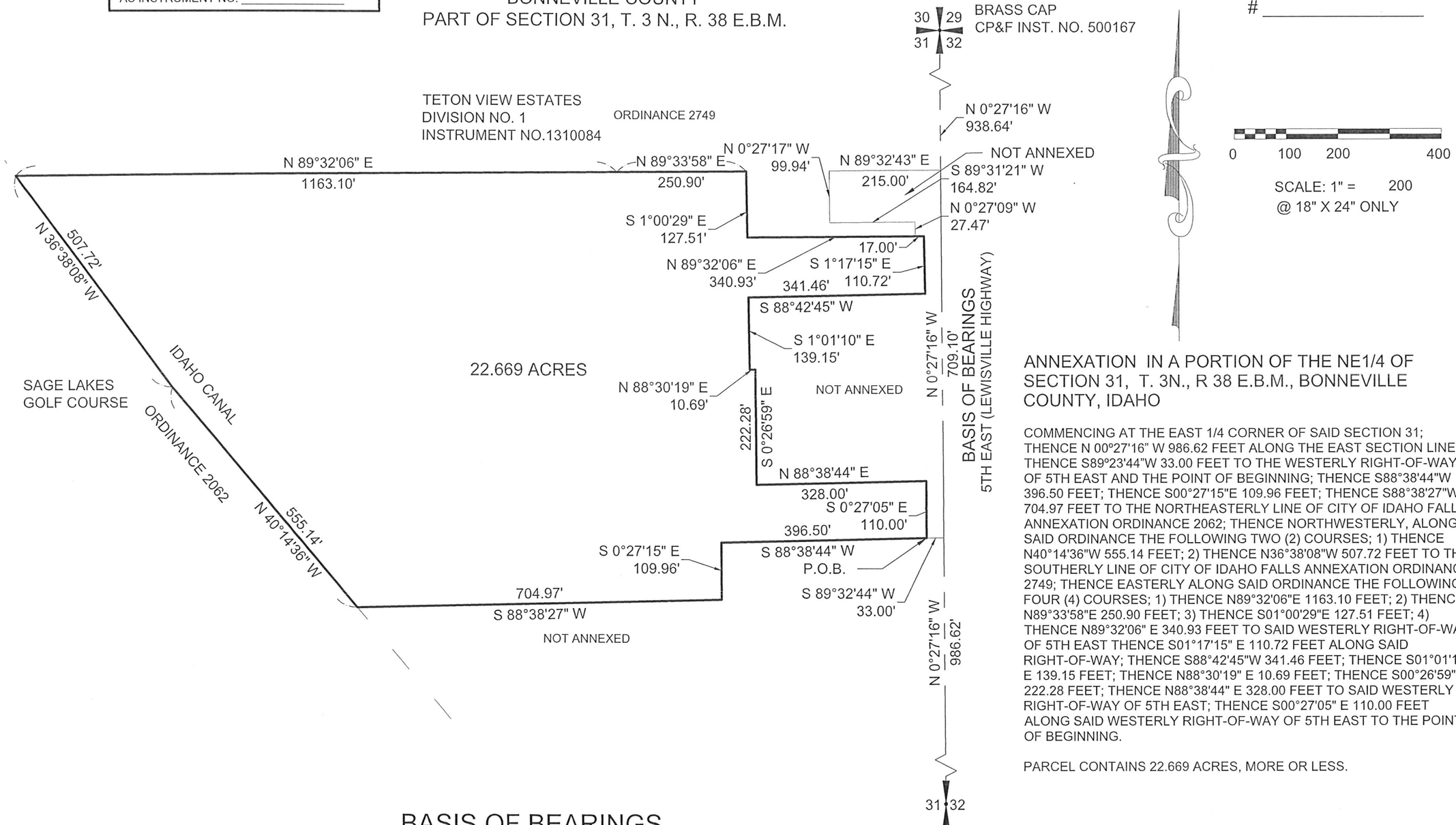

ANNEXATION IN A PORTION OF THE NE1/4 OF SECTION 31, T. 3N., R 38 E.B.M., BONNEVILLE COUNTY, IDAHO

COMMENCING AT THE EAST 1/4 CORNER OF SAID SECTION 31; THENCE N 00°27'16" W 986.62 FEET ALONG THE EAST SECTION LINE; THENCE S89°23'44"W 33.00 FEET TO THE WESTERLY RIGHT-OF-WAY OF 5TH EAST AND THE POINT OF BEGINNING; THENCE S88°38'44"W 396.50 FEET; THENCE S00°27'15"E 109.96 FEET; THENCE S88°38'27"W 704.97 FEET TO THE NORTHEASTERLY LINE OF CITY OF IDAHO FALLS ANNEXATION ORDINANCE 2062; THENCE NORTHWESTERLY, ALONG SAID ORDINANCE THE FOLLOWING TWO (2) COURSES; 1) THENCE N40°14'36"W 555.14 FEET; 2) THENCE N36°38'08"W 507.72 FEET TO THE SOUTHERLY LINE OF CITY OF IDAHO FALLS ANNEXATION ORDINANCE 2749; THENCE EASTERLY ALONG SAID ORDINANCE THE FOLLOWING FOUR (4) COURSES; 1) THENCE N89°32'06"E 1163.10 FEET; 2) THENCE N89°33'58"E 250.90 FEET; 3) THENCE S01°00'29"E 127.51 FEET; 4) THENCE N89°32'06" E 340.93 FEET TO SAID WESTERLY RIGHT-OF-WAY OF 5TH EAST THENCE S01°17'15" E 110.72 FEET ALONG SAID RIGHT-OF-WAY; THENCE S88°42'45"W 341.46 FEET; THENCE S01°01'10" E 139.15 FEET; THENCE N88°30'19" E 10.69 FEET; THENCE S00°26'59" E 222.28 FEET; THENCE N88°38'44" E 328.00 FEET TO SAID WESTERLY RIGHT-OF-WAY OF 5TH EAST; THENCE S00°27'05" E 110.00 FEET ALONG SAID WESTERLY RIGHT-OF-WAY OF 5TH EAST TO THE POINT OF BEGINNING.

PARCEL CONTAINS 22.669 ACRES, MORE OR LESS.

LEGEND

P.O.B.	Point of Beginning
———	Survey Boundary Line
— - - —	Section Control Line

BASIS OF BEARINGS

The bearing along this line is the basis for all other bearings listed on this survey. This bearing relates directly to the "City of Idaho Falls Coordinate System of 2004." Which is derived from the Idaho State Plane Coordinate System (East Zone 1101) US Survey feet and using a combined scale factor of 1.000277265 for a grid to ground conversion, (reference frame NAD_83(2011), epoch 2010.0000). The system orientation is based on grid north along the East Zone central meridian. No convergence angle has been applied.

E 1/4 COR SEC 3
FOUND BRASS CAP
CP&F INST. NO. 937286

PROFESSIONAL LAND SURVEYOR
REGISTERED
15571
1/24/22
STATE OF IDAHO
CLINT M. JOLLEY

CIVIL & STRUCTURAL ENGINEERING
MATERIALS TESTING & LAND SURVEYING
101 S. Park Avenue, Idaho Falls, ID 83402, (208)524-0212
800 W. Judicial Street, Blackfoot, ID 83221, (208)785-2977
460 Lincoln Street, American Falls, ID 83211, (208)226-5764
hleinc.com

DRAWN BY	DESIGN BY	CHECK BY
TD		CMJ

JOB NO: 2021-671

DATE: January 19, 2022

REVISIONS	DATE

CITY OF IDAHO FALLS ANNEXATION

PART OF SECTION 31,
T. 3 N., R. 38 E.B.M.
BONNEVILLE COUNTY, IDAHO

SHEET NO. 1 OF 1 SHEETS

Z:\Projects\00-2021 Projects\21-671 Tracts of Land, LLC - Lot line adj, Annexation & Concept\dwg\Survey\21-671 Tracts of Land12-21-21.dwg

REASONED STATEMENT OF RELEVANT CRITERIA AND STANDARDS

ANNEXATION OF APPROXIMATELY 22.669 ACRES IN THE NORTHEAST QUARTER OF SECTION 31, TOWNSHIP 3 NORTH, RANGE 38 EAST, GENERALLY LOCATED NORTH OF SADDLE ROCK LN, EAST OF N 5TH W, SOUTH OF W 65TH N, WEST OF N 5TH E.

WHEREAS, the applicant filed an application for annexation on December 1, 2021; and

WHEREAS, this matter came before the Idaho Falls Planning and Zoning Commission during a duly noticed public hearing on January 4, 2022; and

WHEREAS, this matter came before the Idaho Falls City Council during a duly noticed public hearing on February 24, 2022; and

WHEREAS, having reviewed the application, including all exhibits entered and having considered the issues presented:

I. RELEVANT CRITERIA AND STANDARDS

1. The City Council considered the request pursuant to City of Idaho Falls Comprehensive Plan, City of Idaho Falls Zoning Ordinance, City of Idaho Falls Subdivision Ordinance, the Local Land Use Planning Act, and other applicable development regulations.
2. The property is approximately 22.669 acres generally located north of Saddle Rock Ln, east of N 5th W, south of W 65th N, west of N 5th E.
3. This property is within the city's area of impact. It is contiguous on two sides.
4. The application is a Category "A" annexation.
5. The Comprehensive Plan designates this area as Higher Density and Estate.
6. Idaho Falls Planning and Zoning Commission recommended approval of annexation.

II. DECISION

Based on the above Reasoned Statement of Relevant Criteria, the City Council of the City of Idaho Falls approved the annexation as presented.

PASSED BY CITY COUNCIL OF THE CITY OF IDAHO FALLS

THIS _____ DAY OF _____, 2022

_____

Rebecca Casper - Mayor

Memorandum

File #: 21-423 **City Council Meeting**

FROM: Brad Cramer, Director
DATE: Thursday, February 17, 2022
DEPARTMENT: Community Development Services

Subject
Public Hearing-Part 2 of 2 of the Annexation and Initial Zoning of R3A, Residential Mixed Use with an Airport Overlay Zone of Approach Surface, Initial Zoning Ordinance and Reasoned Statement of Relevant Criteria and Standards, 22.669 Acres, Northeast ¼ of Section 31 Township 3 North, Range 38 East.

Council Action Desired

☒ Ordinance ☐ Resolution ☒ Public Hearing
☐ Other Action (Approval, Authorization, Ratification, etc.)

1. Assign a Comprehensive Plan Designation of "Residential and Estate" and approve the Ordinance establishing the initial zoning for R3A, Residential Mixed Use with the Airport Overlay Zone of Approach Surface as shown in the Ordinance exhibits under a suspension of the rules requiring three complete and separate readings and request that it be read by title and published by summary, that the City limits documents be amended to include the area annexed herewith, and that the City Planner be instructed to reflect said annexation, amendment to the Comprehensive Plan, and initial zoning on the Comprehensive Plan and Zoning Maps located in the Planning office (or consider the Ordinance on the first reading and that it be read by title, reject the Ordinance, or take other action deemed appropriate).

2. Approve the Reasoned Statement of Relevant Criteria and Standards for the Initial Zoning of R3A, Residential Mixed Use and give authorization for the Mayor to execute the necessary documents (or take other action deemed appropriate).

Description, Background Information & Purpose

Attached is part 2 of 2 of the application for Annexation and Initial Zoning of R3A, Residential Mixed Use with the Airport Overlay Zone of Approach Surface which includes the Initial Zoning Ordinance and Reasoned Statement of Relevant Criteria and Standards for 22.669 Acres, Northeast ¼ of Section 31 Township 3 North, Range 38 East. The Planning and Zoning Commission considered this item at its January 4, 2022, meeting and recommended approval of R3A, Residential Mixed Use with the Airport Overlay Zone of Approach Surface by a unanimous vote. Staff concurs with this recommendation and recommends approval.

Alignment with City & Department Planning Objectives

☐ ☒ ☒ ☐ ☒ ☐ ☐ ☐

Consideration of initial zoning must be consistent with the principles of the Comprehensive Plan which includes many policies and goals related to Good Governance, Growth, Sustainability, and Livable Communities.

Interdepartmental Coordination

The initial zoning legal description has been reviewed by the Survey Division.

Fiscal Impact

NA

Legal Review

This application and ordinance have been reviewed by Legal pursuant to applicable law.

Annexation and Initial Zoning

ANNX21-019 N 5th E - R3A

Legend

- ANNX21-019
- City Limit

Zoning

- RE
- RP
- R1
- R2
- TN
- RMH
- R3
- R3A
- PB
- CC
- LC
- HC
- R&D
- LM
- I&M
- P

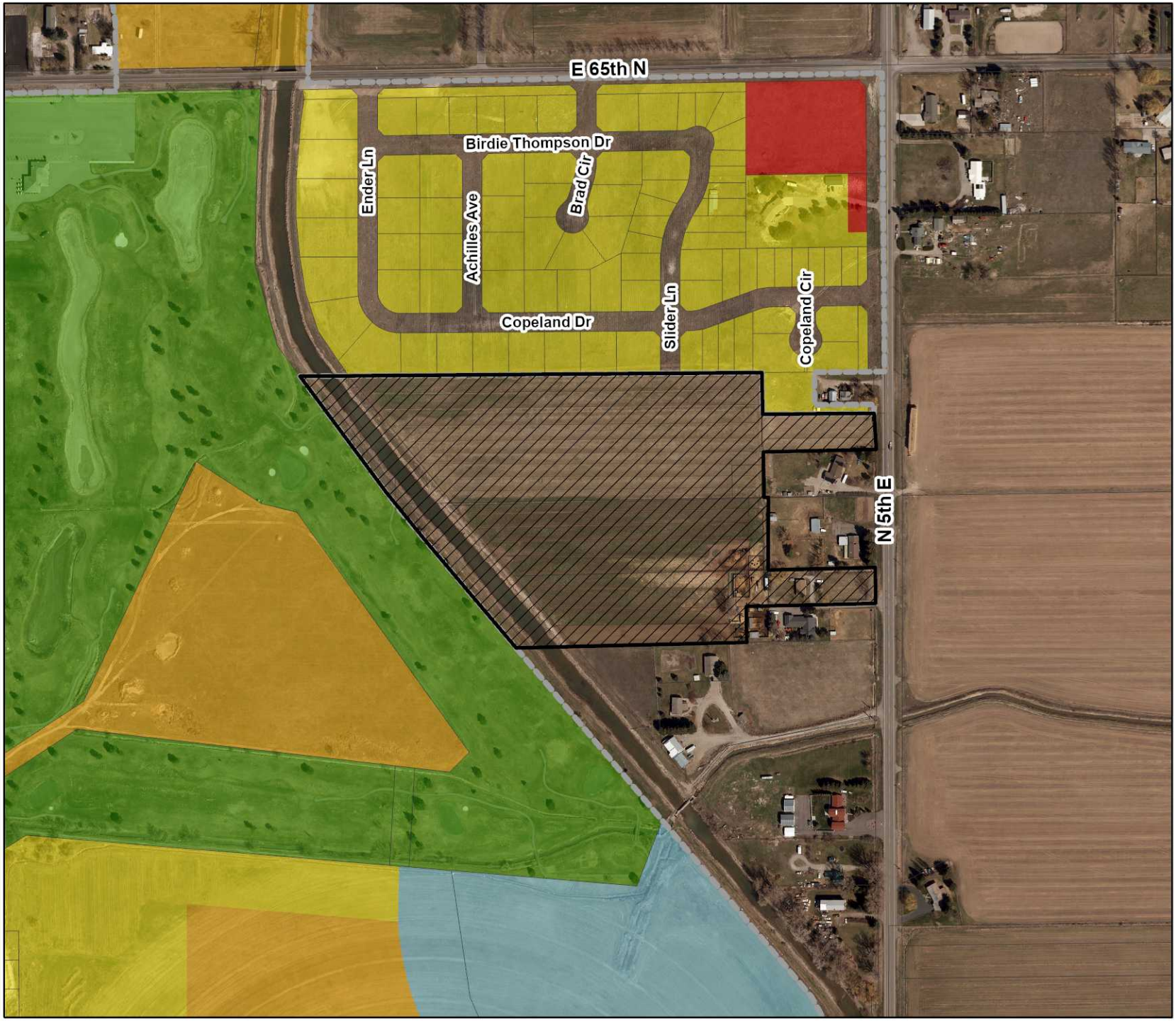

IDAHO FALLS

Planning Division
City Annex Building
680 Park Ave.
Idaho Falls, ID 83402
(208) 612-8276

N

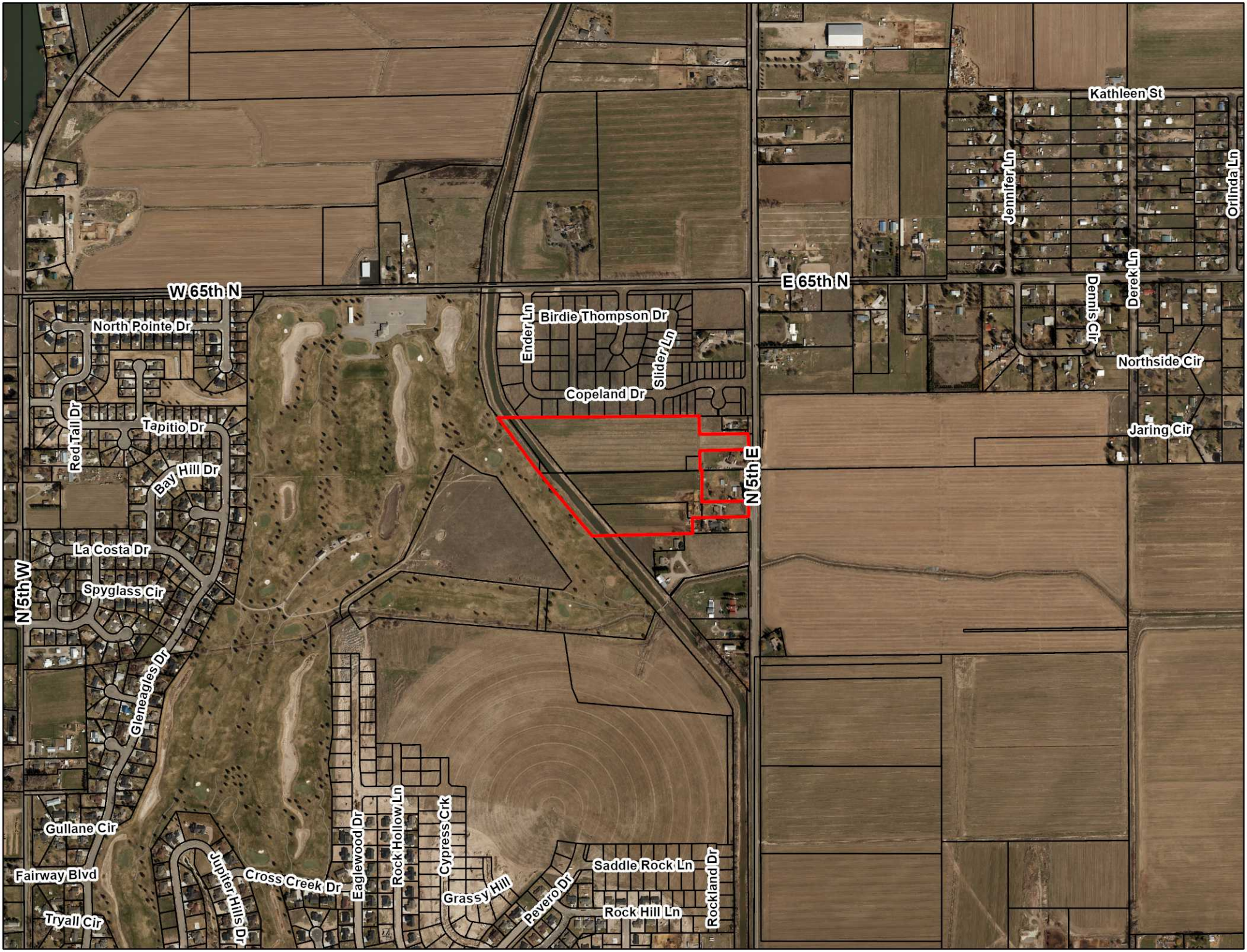
W 65th N
E 65th N
N 5th W
N 5th E
North Pointe Dr
Red Tail Dr
Tapitio Dr
Bay Hill Dr
La Costa Dr
Spyglass Cir
Gleneagles Dr
Gullane Cir
Fairway Blvd
Tryall Cir
Jupiter Hills Dr
Cross Creek Dr
Eaglewood Dr
Rock Hollow Ln
Cypress Crk
Grassy Hill
Pevero Dr
Saddle Rock Ln
Rock Hill Ln
Rockland Dr
Ender Ln
Birdie Thompson Dr
Slider Ln
Copeland Dr
Kathleen St
Jennifer Ln
Dennis Cir
Derek Ln
Orlinda Ln
Northside Cir
Jaring Cir

Annexation and Initial Zoning

ANNX21-019 N 5th E - R3A

- Estate
- Low Density
- Higher Density
- Greenbelt Mixed Uses
- Parks and Recreation
- Public Facilities and Open Spaces
- Commercial
- Employment Centers
- Medical Services Centers
- Higher Education Centers
- Planned Transition
- Highway-related industrial
- Railroad-related industrial

Comprehensive Plan

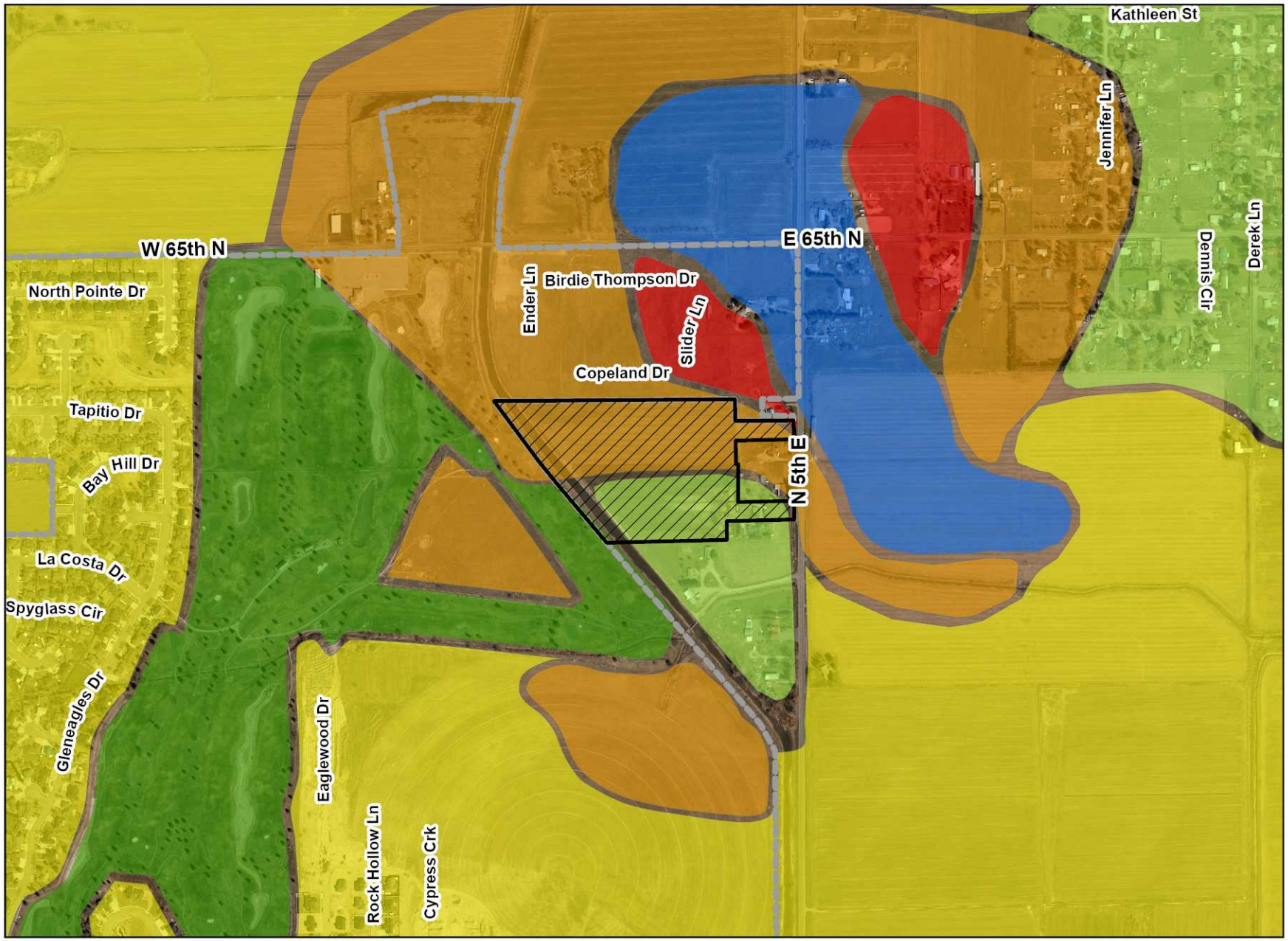

IDAHO FALLS

Planning Division
City Annex Building
680 Park Ave.
Idaho Falls, ID 83402
(208) 612-8276

N

ORDINANCE NO._____

AN ORDINANCE OF THE CITY OF IDAHO FALLS, IDAHO, A MUNICIPAL CORPORATION OF THE STATE OF IDAHO; PROVIDING FOR THE INITIAL ZONING OF APPROXIMATELY 22.669 ACRES DESCRIBED IN EXHIBIT A OF THIS ORDINANCE AS; AND PROVIDING SEVERABILITY, PUBLICATION BY SUMMARY, AND ESTABLISHING EFFECTIVE DATE.

WHEREAS, the proposed initial zoning district of lands described in Exhibit A is R3A Residential Mixed Use and Airport Overlay Zone of Approach Surface for such annexed lands is consistent with the current City of Idaho Falls Comprehensive Plan Land use designation "Higher Density" and "Estate"; and

WHEREAS, the proposed zoning district is consistent and compatible with the existing and surrounding zoning districts and is consistent with principles of the City of Idaho Falls Comprehensive Plan; and

WHEREAS, for consistency with the Comprehensive Plan, the Council desires to designate the lands within the area of annexation as "Higher Density" and "Estate"; and

WHEREAS, Idaho Falls Planning and Zoning Commission held a duly noticed public hearing on January 4, 2022, and recommended approval of zoning the subject property to R3A, Residential Mixed Use Zone and Airport Overlay Zone of Approach Surface; and

WHEREAS, the Council conducted a duly noticed public hearing and passed a motion to approve this zoning on February 24, 2022.

NOW THEREFORE, BE IT ORDAINED BY THE MAYOR AND COUNCIL OF THE CITY OF IDAHO FALLS, IDAHO, AS FOLLOWS:

SECTION 1: Comprehensive Plan Designation. The area described in Exhibit A are hereby given a Comprehensive Plan designation of Higher Density and Estate.

SECTION 2: Legal Description. The lands described in Exhibit A are hereby zoned as R3A, Residential Mixed Use Zone and Airport Overlay Zone of Approach Surface.

SECTION 3. Zoning. The property described in Section 1 of this Ordinance be and the same hereby is zoned "R3A, Residential Mixed Use" and "Airport Overlay Zone of Approach Surface" and the City Planner is hereby ordered to make the necessary amendments to the official maps of the City of Idaho Falls which are on file at the City Planning Department Offices, 680 Park Avenue.

SECTION 4. Savings and Severability Clause. The provisions and parts of this Ordinance are intended to be severable. If any section, sentence, clause or phrase of this Ordinance should be held to be invalid or unconstitutional by a court of competent jurisdiction, such invalidity or

unconstitutionality shall not affect the validity or constitutionality of any other section, sentence, clause or phrase of this Ordinance.

SECTION 5. Publication. This Ordinance, or a summary thereof in compliance with Idaho Code, shall be published once in the official newspaper of the City, and shall take effect immediately upon its passage, approval, and publication.

SECTION 6. Effective Date. This Ordinance shall be in full force and effect from and after its passage, approval and publication.

PASSED by the City Council and APPROVED by the Mayor of the City of Idaho Falls, Idaho, this_____day of_____, 2022.

CITY OF IDAHO FALLS, IDAHO

_____
Rebecca L. Noah Casper, Mayor

ATTEST:

_____
Kathy Hampton, City Clerk

(SEAL)

STATE OF IDAHO)
) ss:
County of Bonneville)

I, KATHY HAMPTON, CITY CLERK OF THE CITY OF IDAHO FALLS, IDAHO, DO HEREBY CERTIFY:

That the above and foregoing is a full, true and correct copy of the Ordinance entitled, "AN ORDINANCE OF THE CITY OF IDAHO FALLS, IDAHO, A MUNICIPAL CORPORATION OF THE STATE OF IDAHO; PROVIDING FOR THE INITIAL ZONING OF APPROXIMATELY 22.669 ACRES DESCRIBED IN SECTION 1 OF THIS ORDINANCE AS R3A, RESIDENTIAL MIXED USE AND AIRPORT OVERLAY ZONE OF APPROACH SURFACE; AND PROVIDING SEVERABILITY, PUBLICATION BY SUMMARY, AND ESTABLISHING EFFECTIVE DATE."

_____
Kathy Hampton, City Clerk

Exhibit "A"

LEGAL DESCRIPTION (Page 1 of 1)

ANNEXATION IN A PORTION OF THE NE1/4 OF SECTION 31, T. 3N., R 38 E.B.M., BONNEVILLE COUNTY , IDAHO

COMMENCING AT THE EAST 1/4 CORNER OF SAID SECTION 31; THENCE N 00º27'16" W 986.62 FEET ALONG THE EAST SECTION LINE; THENCE S89º23'44"W 33.00 FEET TO THE WESTERLY RIGHT-OF-WAY OF 5TH EAST AND THE POINT OF BEGINNING; THENCE S88°38'44"W 396.50 FEET; THENCE S00°27'15"E 109.96 FEET; THENCE S88°38'27"W 704.97 FEET TO THE NORTHEASTERLY LINE OF CITY OF IDAHO FALLS ANNEXATION ORDINANCE 2062; THENCE NORTHWESTERLY, ALONG SAID ORDINANCE THE FOLLOWING TWO (2) COURSES; 1) THENCE N40°14'36"W 555.14 FEET; 2) THENCE N36°38'08"W 507.72 FEET TO THE SOUTHERLY LINE OF CITY OF IDAHO FALLS ANNEXATION ORDINANCE 2749; THENCE EASTERLY ALONG SAID ORDINANCE THE FOLLOWING FOUR (4) COURSES; 1) THENCE N89°32'06"E 1163.10 FEET; 2) THENCE N89°33'58"E 250.90 FEET; 3) THENCE S01°00'29"E 127.51 FEET; 4) THENCE N89°32'06" E 340.93 FEET TO SAID WESTERLY RIGHT-OF-WAY OF 5TH EAST THENCE S01°17'15" E 110.72 FEET ALONG SAID RIGHT-OF-WAY; THENCE S88°42'45"W 341.46 FEET; THENCE S01°01'10" E 139.15 FEET; THENCE N88°30'19" E 10.69 FEET; THENCE S00°26'59" E 222.28 FEET; THENCE N88°38'44" E 328.00 FEET TO SAID WESTERLY RIGHT-OF-WAY OF 5TH EAST; THENCE S00°27'05" E 110.00 FEET ALONG SAID WESTERLY RIGHT-OF-WAY OF 5TH EAST TO THE POINT OF BEGINNING.

PARCEL CONTAINS 22.669 ACRES, MORE OR LESS.

Submitted by:

Eng/Survey Firm Name: HLE

Contact Name: Clint Jolley

Phone Number: 208-524-0212

Email: clintj@hleinc.com

Overall Document Page Range:_____of_____

PLS Seal:

PROFESSIONAL LAND SURVEYOR
LICENSED
15571
1/24/22
STATE OF IDAHO
CLINT M. JOLLEY

ORIGINAL

ORDINANCE RECORDED WITH THE
BONNEVILLE COUNTY RECORDERS OFFICE
AS INSTRUMENT NO. _____

CITY OF IDAHO FALLS
BONNEVILLE COUNTY
PART OF SECTION 31, T. 3 N., R. 38 E.B.M.

ANNEX ORDINANCE
_____

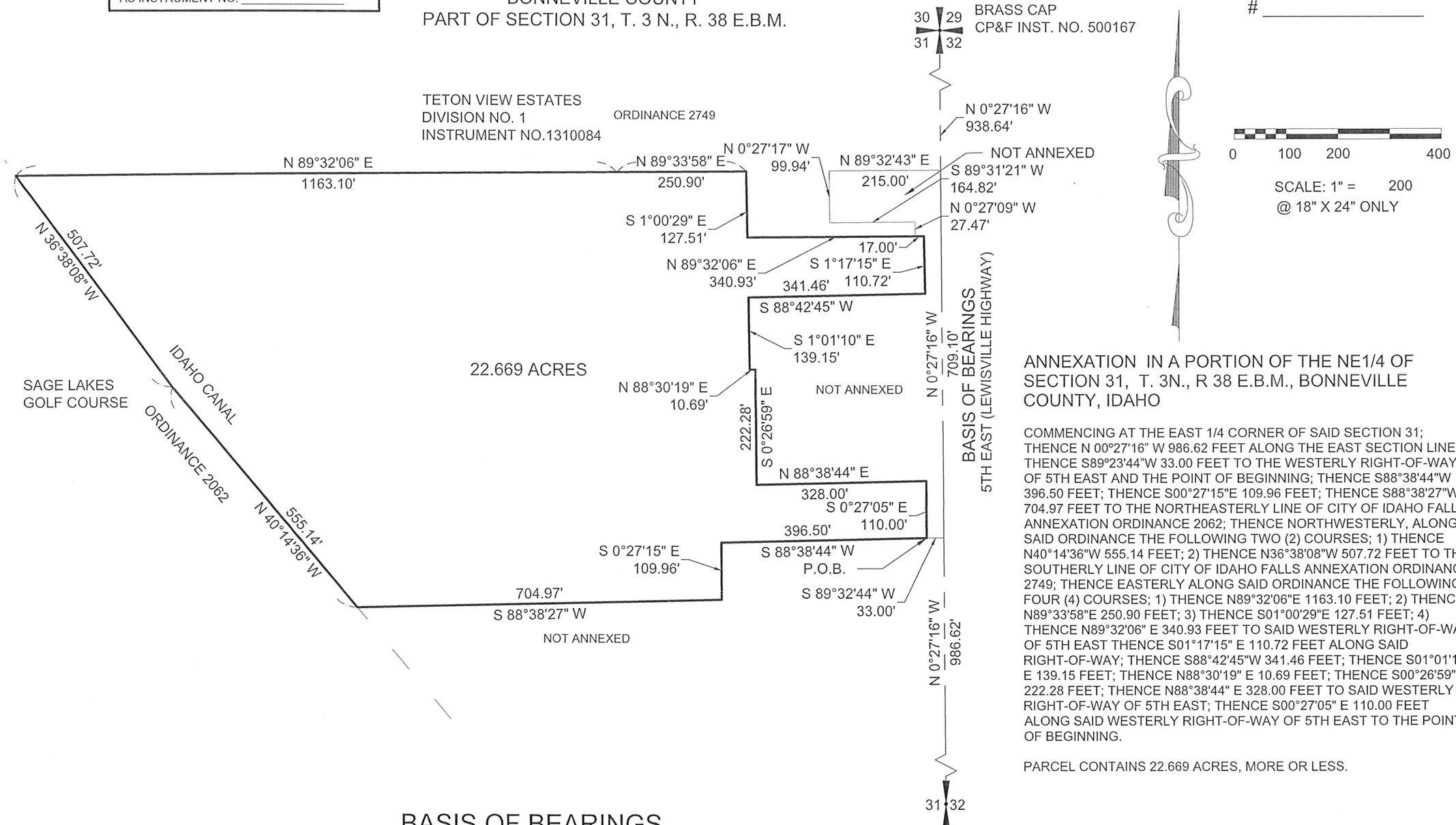

ANNEXATION IN A PORTION OF THE NE1/4 OF SECTION 31, T. 3N., R 38 E.B.M., BONNEVILLE COUNTY, IDAHO

COMMENCING AT THE EAST 1/4 CORNER OF SAID SECTION 31; THENCE N 00°27'16" W 986.62 FEET ALONG THE EAST SECTION LINE; THENCE S89°23'44"W 33.00 FEET TO THE WESTERLY RIGHT-OF-WAY OF 5TH EAST AND THE POINT OF BEGINNING; THENCE S88°38'44"W 396.50 FEET; THENCE S00°27'15"E 109.96 FEET; THENCE S88°38'27"W 704.97 FEET TO THE NORTHEASTERLY LINE OF CITY OF IDAHO FALLS ANNEXATION ORDINANCE 2062; THENCE NORTHWESTERLY, ALONG SAID ORDINANCE THE FOLLOWING TWO (2) COURSES; 1) THENCE N40°14'36"W 555.14 FEET; 2) THENCE N36°38'08"W 507.72 FEET TO THE SOUTHERLY LINE OF CITY OF IDAHO FALLS ANNEXATION ORDINANCE 2749; THENCE EASTERLY ALONG SAID ORDINANCE THE FOLLOWING FOUR (4) COURSES; 1) THENCE N89°32'06"E 1163.10 FEET; 2) THENCE N89°33'58"E 250.90 FEET; 3) THENCE S01°00'29"E 127.51 FEET; 4) THENCE N89°32'06" E 340.93 FEET TO SAID WESTERLY RIGHT-OF-WAY OF 5TH EAST THENCE S01°17'15" E 110.72 FEET ALONG SAID RIGHT-OF-WAY; THENCE S88°42'45"W 341.46 FEET; THENCE S01°01'10" E 139.15 FEET; THENCE N88°30'19" E 10.69 FEET; THENCE S00°26'59" E 222.28 FEET; THENCE N88°38'44" E 328.00 FEET TO SAID WESTERLY RIGHT-OF-WAY OF 5TH EAST; THENCE S00°27'05" E 110.00 FEET ALONG SAID WESTERLY RIGHT-OF-WAY OF 5TH EAST TO THE POINT OF BEGINNING.

PARCEL CONTAINS 22.669 ACRES, MORE OR LESS.

LEGEND

P.O.B.	Point of Beginning
———	Survey Boundary Line
— - - —	Section Control Line

BASIS OF BEARINGS

The bearing along this line is the basis for all other bearings listed on this survey. This bearing relates directly to the "City of Idaho Falls Coordinate System of 2004." Which is derived from the Idaho State Plane Coordinate System (East Zone 1101) US Survey feet and using a combined scale factor of 1.000277265 for a grid to ground conversion, (reference frame NAD_83(2011), epoch 2010.0000). The system orientation is based on grid north along the East Zone central meridian. No convergence angle has been applied.

E 1/4 COR SEC 3
FOUND BRASS CAP
CP&F INST. NO. 937286

PROFESSIONAL LAND SURVEYOR
REGISTERED
15571
1/24/22
STATE OF IDAHO
CLINT M. JOLLEY

CIVIL & STRUCTURAL ENGINEERING
MATERIALS TESTING & LAND SURVEYING
101 S. Park Avenue, Idaho Falls, ID 83402, (208)524-0212
800 W. Judicial Street, Blackfoot, ID 83221, (208)785-2977
460 Lincoln Street, American Falls, ID 83211, (208)226-5764
hleinc.com

DRAWN BY	DESIGN BY	CHECK BY
TD		CMJ

JOB NO: 2021-671

DATE: January 19, 2022

REVISIONS	DATE

CITY OF IDAHO FALLS ANNEXATION

PART OF SECTION 31,
T. 3 N., R. 38 E.B.M.
BONNEVILLE COUNTY, IDAHO

SHEET NO. 1 OF 1 SHEETS

Z:\Projects\00-2021 Projects\21-671 Tracts of Land, LLC - Lot line adj, Annexation & Concept\dwg\Survey\21-671 Tracts of Land12-21-21.dwg

REASONED STATEMENT OF RELEVANT CRITERIA AND STANDARDS

INITIAL ZONING OF R3A, RESIDENTIAL MIXED USE, AND AIRPORT OVERLAY ZONE OF APPROACH SURFACE OF APPROXIMATELY 22.669 ACRES IN NORTHEAST QUARTER OF SECTION 31, TOWNSHIP 3 NORTH, RANGE 38 EAST, GENERALLY LOCATED NORTH OF SADDLE ROCK LN, EAST OF N 5TH W, SOUTH OF W 65TH N, WEST OF N 5TH E.

WHEREAS, the applicant filed an application for annexation on December 1, 2021; and

WHEREAS, this matter came before the Idaho Falls Planning and Zoning Commission during a duly noticed public hearing on January 4, 2022; and

WHEREAS, this matter came before the Idaho Falls City Council during a duly noticed public hearing on February 24, 2022; and

WHEREAS, having reviewed the application, including all exhibits entered and having considered the issues presented:

I. RELEVANT CRITERIA AND STANDARDS

1. The City Council considered the request pursuant to City of Idaho Falls Comprehensive Plan, City of Idaho Falls Zoning Ordinance, City of Idaho Falls Subdivision Ordinance, the Local Land Use Planning Act, and other applicable development regulations.
2. The property is approximately 22.669 acres generally located north of Saddle Rock Ln, east of N 5th W, south of W 65th N, west of N 5th E.
3. The Comprehensive Plan designates this area as Higher Density and Estate.
4. The proposed zoning is R3A, Residential Mixed Use and Airport Overlay of Approach Surface Zone is consistent with the Comprehensive Plan map and policies and existing zoning in the area.
5. Idaho Falls Planning and Zoning Commission recommended approval of zoning the subject property to R3A, Residential Mixed Use and Airport Overlay Zone of Approach Surface.

II. DECISION

Based on the above Reasoned Statement of Relevant Criteria, the City Council of the City of Idaho Falls approved the initial zoning as presented.

PASSED BY CITY COUNCIL OF THE CITY OF IDAHO FALLS

THIS _____ DAY OF _____, 2022

_____

Rebecca Casper - Mayor

Memorandum

File #: 21-396 **City Council Meeting**

FROM: Brad Cramer, Director
DATE: Monday, January 31, 2022
DEPARTMENT: Community Development Services

Subject
Ordinance amending Title 10, chapter 7 of the City of Idaho Falls Form Based Code Use Category and Subcategory Table to allow neighborhood retail and neighborhood services in the Edge C Subdistrict.

Council Action Desired
☒ Ordinance ☐ Resolution ☒ Public Hearing

☐ Other Action (Approval, Authorization, Ratification, etc.)

To approve the Ordinance amending the Form Based Code to allow neighborhood retail and neighborhood services in the Edge C Subdistrict under a suspension of the rules requiring three complete and separate readings and request that it be read by title and published by summary (or consider the Ordinance on the first reading and that it be read by title, reject the Ordinance, or take other action deemed appropriate).

Description, Background Information & Purpose
Attached is an ordinance amending the Form Based Code for the Downtown District to allow for neighborhood retail and neighborhood services in the Edge C Subdistrict. The purpose of an Edge Subdistrict is to, "…provide a transition between the Core and General Subdistricts and adjacent open space, residential or alternative Place Types." The code also specifies that the Edge C Subdistrict, "…provides an important transition between Core Subdistricts and existing established single unit residential areas. Mixed-use development is lower in intensity." This low-intensity guide is the reason for selecting "neighborhood" scale retail and service, which limits the uses and size of the use. Edge C covers F and G Streets on the north end of town, which historically have included retail and service uses, but were left out of the allowed use tables in the code. On January 4, 2022, the Planning and Zoning Commission recommended approval of the amendment to the Form Based Code as presented to the Mayor and City Council. Voting was unanimous.

Alignment with City & Department Planning Objectives

☒ ☒ ☒ ☒ ☐ ☐ ☐ ☒

The proposed ordinance is consistent with principles of Good Governance, Transportation, and Livable Communities.

Interdepartmental Coordination
CDS has worked with the City Attorney's office on the drafting of the ordinance.

Fiscal Impact
NA

Legal Review
Legal has reviewed the attached ordinance.

STAFF REPORT

Amendments to the Form Based Code To Change the Use Table To Allow Neighborhood Retail and Neighborhood Services In The Edge C Subdistrict

February 10, 2022

IDAHO FALLS

Community Development Services

Applicant: City of Idaho Falls

Project Manager: Naysha Foster

Attachments:
1. Proposed Amendment Language
2. Subdistrict Map

Staff Recommendation: To **recommend** to the Mayor and City Council approval of the amendment to the Use Table in the Form Based Code to allow restaurants in the Edge C Subdistrict.

History: The Form Based Code was adopted in 2019.

Staff Comments: The proposed amendment would change the Use Table in Chapter 4. The change would allow Neighborhood Retail and Neighborhood Services in the Edge C Subdistrict. The Edge C Subdistrict provides a transition between Core Subdistricts and residential. The Edge C Subdistrict is located between F and G Street and between Memorial and Yellowstone.

Staff feels the uses allowed in the Neighborhood Retail and Neighborhood services will create the transition from the Core to Residential, however it will offer residents in the area daily services within walking distance of their homes.

The uses allowed in the Neighborhood Retail and Neighborhood Services would be compatible with the surrounding uses. There are currently some office buildings, a couple of small markets and a restaurant in the Edge C Subdistrict. Restaurants became non-conforming with the adoption of the code. This amendment would correct that issue. There is a mix of housing types between G St and H St, consisting of both single dwelling units and multi-dwelling units.

Staff Recommendation: Staff recommends approval of the amendment to the Form Based Code to Change the Use Table to allow Neighborhood Retail and Neighborhood Services in the Edge C Subdistrict. The uses allowed in the Edge C Subdistrict are compatible with the surrounding land use and still meet the intent of a transition from the Core Subdistricts to residential uses.

Figure 3.1 Subdistricts Regulating Map for the Downtown District.

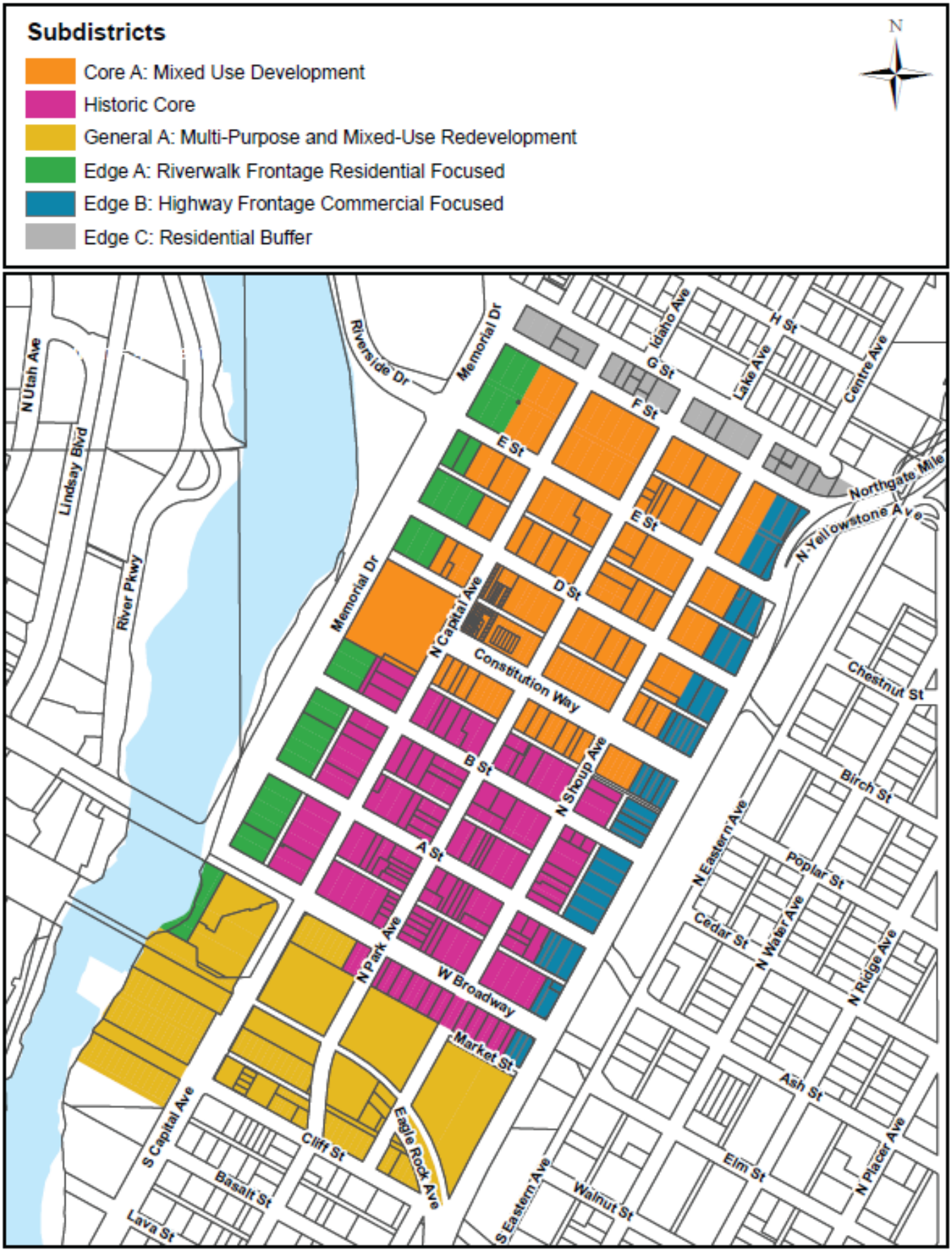

4.0 Uses

KEY

- ● Permitted
- ◓ Permitted in Upper Stories Only
- ◐ Permitted with Development Standards
- ○ Requires a Conditional Use Permit

Use Category and Subcategory Table	Subdistricts						
	Core A	Historic Center	General A	Edge A	Edge B	Edge C	Future Subdistrict
Residential & Lodging							
Residential	●	●	●	●	◓	●	
Hotel & Inn	◓	◓	●	●	●	◐	
Residential Care	●	●	●	●	●	◐	
Civic							
Assembly	◐	◐	●	◐	◐		
Transit Station	●	●	●	◐	●		
Hospital & Clinic	●	◐	●	◐	◐		
Library/Museum/Post Office (no distribution)	●	●	●	◐			
Mail Service (distribution)	◐		◐		◐		
Police & Fire	●	●	●		●		
School	○	○	○	○	○	○	
Retail							
Neighborhood Retail	●	●	●	●	●	◐	
General Retail	●	●	●	◐	◐		
Outdoor Sales							
Service							
Neighborhood Service	●	●	●	◐	◐	◐	
General Service	●	●	●	◐	◐		
Eating & Drinking Establishments	●	●	●	●	●		
Vehicle Service			○		○		
Office & Industrial							
Office	◓	◓	●	◓	●	◐	
Craftsman Industrial	◐	◐	◐	◐	◐		
Infrastructure							
Parking Lot	◐	◐	◐		◐		
Parking Structure (Stand Alone)	◐	◐	◐		◐		
Utility & Infrastructure	○	○	○	○	○		
Open Space	◐	◐	◐	◐	◐	●	
Accessory Uses							
Home Occupation	●	●	●	●	●	●	
Outdoor Storage of Goods			○				
Drive Through			◐		◐		

Table 4.1 (1). Uses by District.

ORDINANCE NO. _____

AN ORDINANCE OF THE CITY OF IDAHO FALLS, IDAHO, A MUNICIPAL CORPORATION OF THE STATE OF IDAHO; AMENDING TITLE 10, CHAPTER 7 OF THE CITY OF IDAHO FALLS FORM BASED CODE TO AMEND THE USE CATEGORY AND SUBCATEGORY IN TABLE 4.0 USES IN SECTION 4 TO ALLOW NEIGHBORHOOD RETAIL AND NEIGHBORHOOD SERVICES IN THE EDGE C SUBDISTRICT AND PROVIDING SEVERABILITY, CODIFICATION, PUBLICATION BY SUMMARY, AND ESTABLISHING EFFECTIVE DATE.

WHEREAS, the City adopted the October 2020 edition of the "Idaho Falls Form Based Code" (Form Based Code) which was prepared for the downtown and south downtown areas and created standards to protect and enhance the unique and historic character of those areas; and

WHEREAS, the City desires for the standards, maps, and graphics of the Code to be consistent and clear; and

WHEREAS, upon review of the Code, City Planning Division staff has determined there are minor updates needed to improve the consistency and clarity of the Code's standards; and

WHEREAS, the City encourages walkable neighborhoods to access daily services; and

WHEREAS, "Neighborhood Retail" and "Neighborhood Services" are considered daily services; and

WHEREAS, the Edge C Subdistrict acts as a buffer between residential and commercial uses and should allow for daily goods and services next to residential in order to provide a walkable neighborhood to those services; and

WHEREAS, on February , 2022, the Council conducted a duly noticed public hearing and passed a motion to approve the recommended changes; and

NOW THEREFORE, BE IT ORDAINED BY THE MAYOR AND COUNCIL OF THE CITY OF IDAHO FALLS, IDAHO, AS FOLLOWS:

SECTION 1. Title 10, Chapter 7, Table 4.0 Uses, Section 4 of the City of Idaho Falls Form Based Code is hereby amended to read as follows:

4.0 Uses

KEY
- ● Permitted
- ◓ Permitted in Upper Stories Only
- ◐ Permitted with Development Standards
- ○ Requires a Conditional Use Permit

Use Category and Subcategory Table	Subdistricts						
	Core A	Historic Center	General A	Edge A	Edge B	Edge C	Future Subdistrict
Residential & Lodging							
Residential	●	●	●	●	◓	●	
Hotel & Inn	◓	◓	●	●	●	◐	
Residential Care	●	●	●	●	●	◐	
Civic							
Assembly	◐	◐	●	◐	◐		
Transit Station	●	●	●	◐	●		
Hospital & Clinic	●	◐	●	◐	◐		
Library/Museum/Post Office (no distribution)	●	●	●	◐			
Mail Service (distribution)	◐		◐		◐		
Police & Fire	●	●	●		●		
School	○	○	○	○	○	○	
Retail							
Neighborhood Retail	●	●	●	●	●	◐	
General Retail	●	●	●	◐	◐		
Outdoor Sales							
Service							
Neighborhood Service	●	●	●	◐	◐	◐	
General Service	●	●	●	◐	◐		
Eating & Drinking Establishments	●	●	●	●	●		
Vehicle Service			○		○		
Office & Industrial							
Office	◓	◓	●	◓	●	◐	
Craftsman Industrial	◐	◐	◐	◐	◐		
Infrastructure							
Parking Lot	◐	◐	◐		◐		
Parking Structure (Stand Alone)	◐	◐	◐		◐		
Utility & Infrastructure	○	○	○	○	○		
Open Space	◐	◐	◐	◐	◐	●	
Accessory Uses							
Home Occupation	●	●	●	●	●	●	
Outdoor Storage of Goods			○				
Drive Through			◐		◐		

Table 4.1 (1). Uses by District.

CHAPTER 4: USES

SECTION 7. Savings and Severability Clause. The provisions and parts of this Ordinance are intended to be severable. If any section, sentence, clause, or phrase of this Ordinance should be held to be invalid or unconstitutional by a court of competent jurisdiction, such invalidity or unconstitutionality shall not affect the validity or constitutionality of any other section, sentence, clause, or phrase of this Ordinance.

SECTION 8. Codification Clause. The City Clerk is instructed to immediately forward this Ordinance to the codifier of the official municipal code for proper revision of the Code.

SECTION 9. Publication. This Ordinance, or a summary thereof in compliance with Idaho Code, shall be published once in the official newspaper of the City, and shall take effect immediately upon its passage, approval, and publication.

SECTION 10. Effective Date. This Ordinance shall be in full force and effect from and after its passage, approval and publication.

PASSED by the City Council and APPROVED by the Mayor of the City of Idaho Falls, Idaho, this _____day of_____, 2022.

ATTEST:	CITY OF IDAHO FALLS, IDAHO
_____	_____
KATHY HAMPTON, CITY CLERK	REBECCA L. NOAH CASPER, Ph. D., MAYOR

STATE OF IDAHO)
) ss:
County of Bonneville)

I, KATHY HAMPTON, CITY CLERK OF THE CITY OF IDAHO FALLS, IDAHO, DO HEREBY CERTIFY:

That the above and foregoing is a full, true and correct copy of the Ordinance entitled, "AN ORDINANCE OF THE CITY OF IDAHO FALLS, IDAHO, A MUNICIPAL CORPORATION OF THE STATE OF IDAHO; AMENDING TITLE 10, CHAPTER 7 OF THE CITY OF IDAHO FALLS FORM BASED CODE BY AMENDING THE USE TABLE TO ALLOW NEIGHBORHOOD RETAIL AND NEIGHBORHOOD SERVICES IN THE EDGE C SUBDISTRICT AND PROVIDING SEVERABILITY, CODIFICATION, PUBLICATION BY SUMMARY, AND ESTABLISHING EFFECTIVE DATE."

(SEAL) _____
KATHY HAMPTON, CITY CLERK

Memorandum

File #: 21-415 **City Council Meeting**

FROM: Chris H Fredericksen, Public Works Director
DATE: Wednesday, February 16, 2022
DEPARTMENT: Public Works

Subject

Public Hearing and Resolution to Adopt the Capital Improvement Plan and Development Impact Fee Study

Council Action Desired

☐ Ordinance ☒ Resolution ☒ Public Hearing
☐ Other Action (Approval, Authorization, Ratification, etc)

Approve the Resolution to adopt the Capital Improvement Plan and Development Impact Fee Study (or other action deemed appropriate).

Description, Background Information & Purpose

Idaho Code Title 67, Chapter 82 authorizes cities and counties to impose development impact fees to cover the costs of necessary infrastructure and facility improvements in compliance with the requirements of the Act.

In order to implement an equitable impact fee system for the public facilities identified and to include 1.) parks, 2.) police, 3.) fire/EMS and 4.) transportation, the City retained TischlerBise, Inc. to prepare an impact fee study titled "Capital Improvement Plan and Development Impact Fee Study of City of Idaho Falls, Idaho 2021", dated December 15, 2021. The study developed maximum supportable development impact fees that could be imposed on new development to meet the new demands generated for public facilities within the City.

The study has been reviewed by staff and the Impact Fee Advisory Committee. Impact fee discussions were held at Work Sessions on November 8, 2021, November 22, 2021 and February 7, 2022. The Impact Fee Advisory Committee voted to recommend the City Council accept the impact fee study at their meeting held on January 24, 2022.

Staff recommends approval of the Resolution adopting the study. Adoption of the study does not require the City to implement impact fees but is a required step in order for the City to consider them.

Alignment with City & Department Planning Objectives

☐ ☐ ☒ ☐ ☒ ☒ ☐ ☒

Adoption of the impact fee study would support the community-oriented results of safe and secure community, well-planned growth and development, livable community and reliable public infrastructure and transportation.

Interdepartmental Coordination

Reviews have been conducted with all relevant city departments to ensure coordination of the Capital Improvement Plan and Development Impact Fee Study.

Fiscal Impact

If approved, impact fees collected from new development would be deposited into four separate accounts and would only be spent on allowable public improvements as specified within the plan.

Legal Review

The Legal Department prepared the Resolution and has reviewed the Capital Improvement Plan and Development Impact Fee Study and determined that it complies with applicable Idaho State Statutes.

0-00-00-0-OTH-2021-07
2022-14

RESOLUTION NO. 2022-

A RESOLUTION OF THE CITY OF IDAHO FALLS, IDAHO, A MUNICIPAL CORPORATION OF THE STATE OF IDAHO, ADOPTING A STUDY TITLED "CAPITOL IMPROVEMENT PLAN AND DEVELOPMENT IMPACT FEE STUDY OF CITY OF IDAHO FALLS, IDAHO 2021"; AND PROVIDING THAT THIS RESOLUTION BE EFFECTIVE UPON ITS PASSAGE, APPROVAL, AND PUBLICATION ACCORDING TO LAW.

WHEREAS, Idaho Code Title 67, Chapter 82 (the "Idaho Development Fee Act") authorizes cities and counties to impose development impact fees to cover the costs of necessary infrastructure and facility improvements in compliance with the requirements of the Act; and

WHEREAS, in order to implement an equitable impact fee system for the public facilities identified, the City retained TischlerBise to prepare an impact fee study titled "Capital Improvement Plan and Development Impact Fee Study of City of Idaho Falls, Idaho 2021", dated December 15, 2021; and

WHEREAS, the creation of an equitable impact fee system will enable the City to impose a proportionate share of the costs of needed improvements to City public facilities to accommodate new growth and development and will assist the City in implementing the capital improvements element of the Comprehensive Plan, when amended; and

WHEREAS, the Council, by this Resolution, adopts the Impact Fee Study attached to this Resolution.

NOW, THEREFORE, BE IT RESOLVED BY THE MAYOR AND COUNCIL OF THE CITY OF IDAHO FALLS, AS FOLLOWS:

1. The Capital Improvement Plan and Development Impact Fee Study of City of Idaho Falls, Idaho 2021 attached to this Resolution sets forth reasonable methodologies and analyses for determining the impacts of various types of new growth and development of the identified City public facilities.

2. The Council finds that the Impact Fee Study uses a calculation methodology in accordance with generally accepted accounting principles and other relevant principles.

3. The Council of the City of Idaho Falls, Idaho, hereby adopts the "Capital Improvement Plan and Development Impact Fee Study of City of Idaho Falls, Idaho 2021."

ADOPTED and effective this ____ day of _____, 2022.

ATTEST: CITY OF IDAHO FALLS, IDAHO

_____ _____

Kathy Hampton, City Clerk Rebecca L. Noah Casper, Mayor

(SEAL)

STATE OF IDAHO)
) ss:
County of Bonneville)

I, KATHY HAMPTON, CITY CLERK OF THE CITY OF IDAHO FALLS, IDAHO, DO HEREBY CERTIFY:

> That the above and foregoing is a full, true and correct copy of the Resolution entitled, "A RESOLUTION OF THE CITY OF IDAHO FALLS, IDAHO, A MUNICIPAL CORPORATION OF THE STATE OF IDAHO, ADOPTING A STUDY TITLED "CAPITOL IMPROVEMENT PLAN AND DEVELOPMENT IMPACT FEE STUDY OF CITY OF IDAHO FALLS, IDAHO 2021"; AND PROVIDING THAT THIS RESOLUTION BE EFFECTIVE UPON ITS PASSAGE, APPROVAL, AND PUBLICATION ACCORDING TO LAW."

_____

Kathy Hampton, City Clerk

(SEAL)

IDAHO FALLS

Capital Improvement Plan and Development Impact Fee Study

Submitted to:

City of Idaho Falls, Idaho

December 15, 2021

Prepared by:

TischlerBise
FISCAL | ECONOMIC | PLANNING

4701 Sangamore Road
Suite S240
Bethesda, Maryland 20816
800.424.4318
www.tischlerbise.com

TischlerBise
4701 Sangamore Road
Suite S240
Bethesda, Maryland 20816
800.424.4318

999 W Main Street
Suite 100
Boise, Idaho 83703
208.515.7480

www.tischlerbise.com

Impact Fee Study
City of Idaho Falls, Idaho

Executive Summary 1
Idaho Development Impact Fee Enabling Legislation 2
Summary of Capital Improvement Plans and Development Impact Fees 3
Methodologies and Credits 3
Fee Methodologies 4
Parks and Recreation 5
Transportation 5
Police 6
Fire/EMS 6
Maximum Supportable Development Impact Fees by Type of Land Use 6
Capital Improvement Plans 8
Parks and Recreation 9
Transportation 11
Police 12
Fire/EMS 15
Funding Sources for Capital Improvements 16
Parks & Recreation Development Impact Fee Analysis 17
Parks & Recreation Level of Service and Cost Analysis 17
Neighborhood Park Land and Park Improvements – Incremental Expansion 17
Urban/Community Park Land and Park Improvements – Incremental Expansion 18
Civic Park Land and Park Improvements – Incremental Expansion 19
Indoor Recreation Center Land and Square Footage – Incremental Expansion 20
Parks & Recreation Capital Improvements Needed to Serve Growth 22
Neighborhood Park Land and Improvements 22
Urban/Community Park Land and Improvements 23
Civic Park Land and Improvements 24
Indoor Recreation Center Land and Square Footage 25
Parks & Recreation Input Variables and Development Impact Fees,854. 26
Cash Flow Projections for Parks & Recreation Maximum Supportable Impact Fee 27
Transportation Development Impact Fee Analysis 28
Methodology 28
Demand for Transportation Infrastructure 29
Trip Length Weighting Factor by Type of Land Use 29
Lane Capacity 29
Summary of Demand Model Inputs 29
Projected Travel Demand 30

Roads Improvements – Incremental Expansion 32
Transportation Input Variables and Development Impact Fees 33
Cash Flow Projections for Transportation Maximum Supportable Impact Fee 34
Police Development Impact Fee Analysis 35
Methodology 35
Cost Allocation for Police Infrastructure 36
Police Level of Service and Cost Analysis 37
Police Station – Plan-Based 37
Police Vehicles – Incremental Expansion 38
Police Capital Improvement Needs to Serve Growth 40
Police Vehicles 40
Police Input Variables and Development Impact Fees 41
Cash Flow Projections for Police Maximum Supportable Impact Fee 42
Fire/EMS Development Impact Fee Analysis 43
Methodology 43
Service Area 43
Cost Allocation for Fire/EMS Infrastructure 44
Fire/EMS Level of Service and Cost Analysis 46
Fire/EMS Station Facilities – Incremental Expansion 46
Fire/EMS Vehicles and Apparatus – Incremental Expansion 47
Fire/EMS Training Center – Incremental Expansion 47
Fire/EMS Capital Improvement Needs to Serve Growth 49
Fire/EMS Station Facilities 49
Fire/EMS Vehicles and Apparatus 49
Fire/EMS Training Center 50
Fire Input Variables and Development Impact Fees 52
Cash Flow Projections for Fire/EMS Maximum Supportable Impact Fee 53
Proportionate Share Analysis 54
Implementation and Administration 55
Appendix A. Land Use Definitions 57
Residential Development 57
Nonresidential Development Categories 57
Appendix B. Demographic Assumptions 59
Population and Housing Characteristics 59
Residential Building Permits 60
Base Year Population and Housing Units 61
Population and Housing Unit Projections 62
Current Employment and Nonresidential Floor Area 63
Nonresidential Floor Area Projections 65
Functional Population 66

Vehicle Trip Generation 67
Residential Vehicle Trips by Housing Type 67
Residential Vehicle Trips Adjustment Factors 68
Nonresidential Vehicle Trips 68
Vehicle Trip Projection 70

EXECUTIVE SUMMARY

The City of Idaho Falls, Idaho, retained TischlerBise, Inc. to update the impact fees imposed on new development to meet the new demands generated for public facilities in the City. It is the intent of the City of Idaho Falls to evaluate and establish impact fees for: (1) parks, (2) transportation, (3) public safety (police and fire/EMS). This report presents the methodologies and calculations used to generate current levels of service and updated maximum supportable impact fees. It is intended to serve as supporting documentation for the evaluation and establishment of impact fees in the City of Idaho Falls.

The purpose of this study is to demonstrate the City's compliance with Idaho Statutes as authorized by the Idaho Legislature. Consistent with the authorization, it is the intent of the City of Idaho Falls to: (Idaho Code 67-8202(1-4))

1. Collect impact fees to ensure that adequate public facilities are available to serve new growth and development;
2. Promote orderly growth and development by establishing uniform standards by which local governments may require that those who benefit from new growth and development pay a proportionate share of the cost of new public facilities needed to serve new growth and development;
3. Establish minimum standards for the adoption of development impact fee ordinances by government entities;
4. Ensure that those who benefit from new growth and development are required to pay no more than their proportionate share of the cost of public facilities needed to serve new growth and development and to prevent duplicate and ad hoc development requirements;

Impact fees are one-time payments used to construct system improvements needed to accommodate new development. An impact fee represents new growth's fair share of capital facility needs. By law, impact fees can only be used for capital improvements, not operating or maintenance costs. Impact fees are subject to legal standards, which require fulfillment of three key elements: need, benefit and proportionality.

- First, to justify a fee for public facilities, it must be demonstrated that new development will create a need for capital improvements.
- Second, new development must derive a benefit from the payment of the fees (i.e., in the form of public facilities constructed within a reasonable timeframe).
- Third, the fee paid by a particular type of development should not exceed its proportional share of the capital cost for system improvements.

TischlerBise evaluated possible methodologies and documented appropriate demand indicators by type of development for the levels of service and fees. Local demographic data and improvement costs were

used to identify specific capital costs attributable to growth. This report includes summary tables indicating the specific factors, referred to as level of service standards, used to derive the impact fees.

The geographic area for all fees, except Fire, is the City of Idaho Falls. The Idaho Falls Fire Department service area includes the City of Idaho Falls and parts of unincorporated Bonneville County. The Fire impact fee is for the City of Idaho Falls service area. Parks and Recreation fees are based on residential demand, while the remaining four fees are calculated for both residential and nonresidential development.

IDAHO DEVELOPMENT IMPACT FEE ENABLING LEGISLATION

The Enabling Legislation governs how development fees are calculated for municipalities in Idaho. All requirements of the Idaho Development Impact Fee Act have been met in the supporting documentation prepared by TischlerBise. There are four requirements of the Idaho Act that are not common in the development impact fee enabling legislation of other states. This overview offers further clarification of these unique requirements.

First, as specified in 67-8204(2) of the Idaho Act, "development impact fees shall be calculated on the basis of levels of service for public facilities . . . applicable to existing development as well as new growth and development."

Second, Idaho requires a Capital Improvements Plan (CIP) [see 67-8208]. The CIP requirements are summarized in this report, with detailed documentation provided in the discussion on infrastructure.

Third, the Idaho Act also requires documentation of any existing deficiencies in the types of infrastructure to be funded by development impact fees [see 67-8208(1)(a)]. The intent of this requirement is to prevent charging new development to cure existing deficiencies. In the context of development impact fees for the City of Idaho Falls, the term "deficiencies" means a shortage or inadequacy of current system improvements when measured against the levels of service to be applied to new development. It does not mean a shortage or inadequacy when measured against some "hoped for" level of service.

TischlerBise used the current infrastructure cost per service unit (i.e., existing standards), or future levels of service where appropriate, multiplied by the projected increase in service units over an appropriate planning timeframe, to yield the cost of growth-related system improvements. The relationship between these three variables can be reduced to a mathematical formula, expressed as A x B = C. In section 67-8204(16), the Idaho Act simply reorganizes this formula, stating the cost per service unit (i.e., development impact fee) may not exceed the cost of growth-related system improvements divided by the number of projected service units attributable to new development (i.e., A = C ÷ B). By using existing infrastructure standards to determine the need for growth-related capital improvements, the City of Idaho Falls ensures the same level-of-service standards are applicable to existing and new development.

Using existing infrastructure standards also means there are no existing deficiencies in the current system that must be corrected from non-development impact fee funding.

Fourth, Idaho requires a proportionate share determination [see 67-8207]. Basically, local government must consider various types of applicable credits and/or other revenues that may reduce the capital costs attributable to new development. The development impact fee methodologies and the cash flow analysis have addressed the need for credits to avoid potential double payment for growth-related infrastructure.

SUMMARY OF CAPITAL IMPROVEMENT PLANS AND DEVELOPMENT IMPACT FEES

METHODOLOGIES AND CREDITS

Development impact fees can be calculated by any one of several legitimate methods. The choice of a particular method depends primarily on the service characteristics and planning requirements for each facility type. Each method has advantages and disadvantages in a particular situation, and to some extent can be interchangeable, because each allocates facility costs in proportion to the needs created by development.

Reduced to its simplest terms, the process of calculating development impact fees involves two main steps: (1) determining the cost of development-related capital improvements and (2) allocating those costs equitably to various types of development. In practice, though, the calculation of impact fees can become quite complicated because of the many variables involved in defining the relationship between development and the need for facilities. The following paragraphs discuss three basic methods for calculating development impact fees, and how each method can be applied.

Plan-Based Fee Calculation. The plan-based method allocates costs for a specified set of improvements to a specified amount of development. Facility plans identify needed improvements, and land use plans identify development. In this method, the total cost of relevant facilities is divided by total demand to calculate a cost per unit of demand. Then, the cost per unit of demand is multiplied by the amount of demand per unit of development (e.g., housing units or square feet of building area) in each category to arrive at a cost per specific unit of development (e.g., single family detached unit).

Cost Recovery or Buy-In Fee Calculation. The rationale for the cost recovery approach is that new development is paying for its share of the useful life and remaining capacity of facilities already built or land already purchased from which new growth will benefit. This methodology is often used for systems that were oversized such as sewer and water facilities.

Incremental Expansion Fee Calculation. The incremental expansion method documents the current level of service (LOS) for each type of public facility in both quantitative and qualitative measures, based on an existing service standard (such as square feet per student). This approach ensures that there are no existing infrastructure deficiencies or surplus capacity in infrastructure. New development is only paying

its proportionate share for growth-related infrastructure. The level of service standards are determined in a manner similar to the current replacement cost approach used by property insurance companies. However, in contrast to insurance practices, the fee revenues would not be for renewal and/or replacement of existing facilities. Rather, revenue will be used to expand or provide additional facilities, as needed, to accommodate new development. An incremental expansion cost method is best suited for public facilities that will be expanded in regular increments, with LOS standards based on current conditions in the community.

Credits. Regardless of the methodology, a consideration of "credits" is integral to the development of a legally valid impact fee methodology. There are two types of "credits," each with specific and distinct characteristics, but both of which should be addressed in the calculation of development impact fees. The first is a credit due to possible double payment situations. This could occur when contributions are made by the property owner toward the capital costs of the public facility covered by the impact fee. This type of credit is integrated into the impact fee calculation. The second is a credit toward the payment of a fee for dedication of public sites or improvements provided by the developer and for which the facility fee is imposed. This type of credit is addressed in the administration and implementation of a facility fee program.

Fee Methodologies

Of the fee methodologies discussed above, the *incremental expansion* and *plan-based* methodologies are used to calculate impact fees for the City of Idaho Falls. Where capacity is sufficient to serve current demand the *incremental expansion* method documents the current Level of Service (LOS) for each type of public facility. A *plan-based* method is used for the planned new police station. The following table summarizes the method(s) used to derive the impact fee for each type of public facility in Idaho Falls. A summary of each development fee is provided below:

Figure 1. Summary of Impact Fee Methodologies

Fee Category	Service Area	Incremental Expansion	Plan-Based	Cost Recovery	Cost Allocation
Parks and Recreation	Citywide	Neighborhood Parks, Urban/Community Parks, Civic Parks, Indoor Recreation Centers	n/a	n/a	Population
Transportation	Citywide	Arterial Capacity Improvements	n/a	n/a	Vehicle Miles Traveled (VMT)
Police	Citywide	Police Vehicles	New Police Station	n/a	Population, Nonresidential Vehicle Trips
Fire/EMS	Citywide	Station Facilities, Vehicles and Apparatus, Training Center	n/a	n/a	Fire/EMS Calls for Service

Calculations throughout this technical memo are based on an analysis conducted using Excel software. Results are discussed in the memo using one-and two-digit places (in most cases), which represent rounded figures. However, the analysis itself uses figures carried to their ultimate decimal places; therefore, the sums and products generated in the analysis may not equal the sum or product if the reader replicates the calculation with the factors shown in the report (due to the rounding of figures shown, not in the analysis).

PARKS AND RECREATION

The City's Park system includes four types of parks—neighborhood parks, urban/community parks, civic parks, and indoor recreation centers. Neighborhood parks serve a variety of age groups within a limited area or neighborhood and includes areas for both active and passive recreation. Community parks are larger than neighborhood parks and serve several neighborhoods. Community parks include areas for intense recreation activities and passive recreation opportunities. Civic parks are for specialized or single-purpose recreation activities. Indoor recreation centers include specialty use buildings such as aquatic centers, hockey rinks, and recreation centers.

The Parks and Recreation development impact fee is based on the existing level of service provided for park land and park improvements; and indoor recreation facilities. The development impact fee is calculated for residential development only. To serve projected growth at current levels of service, the following infrastructure is projected over the next ten years:

- 2.3 neighborhood park acres
- 55.8 community park acres
- 4.0 civic park acres
- 1.0 acre and 12,161 square feet of indoor recreation space

TRANSPORTATION

Transportation's development impact fee is based on an incremental expansion approach for major and minor arterial needs over a 10-year period. The incremental expansion methodology documents the current level of service provided to development and serves to maintain this as new development occurs. Transportation development impact fees are calculated for both residential and nonresidential development vehicle miles traveled to allocate capital costs to residential or nonresidential land uses.

To serve projected growth at current levels of service, the following infrastructure is projected over the next ten years:

- 23.4 arterial lane miles
- $16,050,000 growth-related costs to the City of Idaho Falls

POLICE

The Police development impact fee is based on police vehicles and the planned new police station serving the City of Idaho Falls. Police calls for service, population growth, and vehicle trip growth are used to determine residential and nonresidential proportionate share factors (i.e., how much of the current infrastructure serves residential or nonresidential land uses). Police development impact fees are calculated for residential and nonresidential development based on cost per person and cost per vehicle trips, respectively. New growth's percentage share of the planned police station is determined by population growth and vehicle trip growth through 2039.

The following infrastructure is projected over the next ten years to serve the estimated growth:

- 15.1 new police vehicles
- 7,008 square feet of new police station

FIRE/EMS

The Fire/EMS development impact fee is based on fire/EMS station facilities, training center, and vehicles and apparatus serving the City of Idaho Falls. Fire/EMS calls for service are used to determine residential and nonresidential proportionate share factors (i.e., how much of the current infrastructure serves residential or nonresidential land uses). Fire/EMS development impact fees are calculated for residential and nonresidential development based on cost per fire/EMS call for service.

To serve projected growth at current levels of service, the following infrastructure is projected over the next 10 years:

- 2.6 new fire/EMS vehicles and apparatus
- 6,031 square feet of fire/EMS stations
- 13,696 square feet of fire/EMS training center space

MAXIMUM SUPPORTABLE DEVELOPMENT IMPACT FEES BY TYPE OF LAND USE

Figure 2 provides a schedule of the maximum supportable development impact fees by type of land use for the City of Idaho Falls. The fees represent the highest supportable amount for each type of applicable land use, and represents new growth's fair share of the cost for capital facilities. The City may adopt fees that are less than the amounts shown. However, a reduction in impact fee revenue will necessitate an increase in other revenues, a decrease in planned capital expenditures, and/or a decrease in levels of service.

The fees for residential development are to be assessed per housing unit. For nonresidential development, the fees are assessed per square foot of floor area. Nonresidential development categories are consistent with the terminology and definitions contained in the reference book, Trip Generation 10th Edition,

published by the Institute of Transportation Engineers. These definitions are provided in the Appendix A. Land Use Definitions.

Figure 2. Summary of Maximum Supportable Development Impact Fees by Land Use

Development Type	Parks & Recreation	Transp.	Police	Fire/EMS	Maximum Supportable Fee
Residential (per housing unit)					
Single Family	$1,854	$3,013	$641	$519	$6,027
Multifamily	$1,282	$1,336	$443	$418	$3,479
Nonresidential (per 1,000 square feet)					
Retail	$0	$3,835	$1,822	$462	$6,119
Office	$0	$1,440	$618	$77	$2,135
Industrial	$0	$733	$315	$37	$1,085
Institutional	$0	$1,585	$681	$1,669	$3,935

CAPITAL IMPROVEMENT PLANS

The following section provides a summary of the Capital Improvement Plans depicting growth-related capital demands and costs on which the fees are based. Each infrastructure category is discussed in turn.

First, Figure 3 lists the projected growth over the next ten years in Idaho Falls. Overall, there is about a 14 percent increase is residential development (8,896 new residents and 3,480 new housing units) and a 16 percent increase in nonresidential development (8,840 new jobs and 3.8 million square feet of development). In turn, there is a 15 percent increase in transportation demand.

Figure 3. Ten-Year Projected Residential and Nonresidential Growth

City of Idaho Falls, ID	Base Year 2021	*1* 2022	*2* 2023	*3* 2024	*4* 2025	*5* 2026	*10* 2031	Total Increase
Population [1]	63,473	64,362	65,252	66,141	67,031	67,921	72,369	**8,896**
Housing Units by Type [2]								
Single Family	19,136	19,440	19,744	20,048	20,352	20,656	22,176	**3,040**
Multifamily	6,833	6,877	6,921	6,965	7,009	7,053	7,273	**440**
Total Housing Units	25,968	26,316	26,664	27,012	27,360	27,708	29,448	**3,480**
Jobs [3]								
Retail	13,281	13,449	13,617	13,784	13,952	14,120	14,959	**1,678**
Office	17,354	17,630	17,906	18,181	18,457	18,733	20,111	**2,757**
Industrial	9,796	10,022	10,248	10,473	10,699	10,925	12,053	**2,257**
Institutional	13,528	13,743	13,958	14,173	14,388	14,603	15,677	**2,149**
Total Jobs	53,960	54,844	55,728	56,612	57,496	58,380	62,800	**8,840**
Nonresidential Floor Area (1,000 sq. ft.) [4]								
Retail	5,668	5,739	5,811	5,883	5,954	6,026	6,384	**716**
Office	5,844	5,937	6,030	6,123	6,216	6,308	6,772	**928**
Industrial	6,024	6,163	6,301	6,440	6,579	6,718	7,412	**1,388**
Institutional	4,783	4,859	4,935	5,011	5,087	5,163	5,542	**760**
Total Floor Area	22,319	22,698	23,077	23,456	23,835	24,214	26,110	**3,792**
Vehicle Trips & Vehicle Miles Traveled (VMT) [5]								
Single Family Trips	117,645	119,514	121,383	123,252	125,121	126,990	136,335	**18,690**
Multifamily Trips	18,626	18,746	18,866	18,986	19,106	19,226	19,825	**1,199**
Residential Subtotal	*136,271*	*138,260*	*140,249*	*142,238*	*144,227*	*146,216*	*156,161*	***19,889***
Retail Trips	81,304	82,331	83,358	84,385	85,413	86,440	91,575	**10,271**
Office Trips	28,461	28,913	29,365	29,817	30,270	30,722	32,982	**4,521**
Industrial Trips	14,939	15,284	15,628	15,972	16,316	16,660	18,381	**3,441**
Institutional Trips	25,636	26,043	26,450	26,857	27,265	27,672	29,708	**4,072**
Nonresidential Subtotal	*150,340*	*152,571*	*154,801*	*157,032*	*159,263*	*161,493*	*172,646*	***22,305***
Total Vehicle Trips	286,612	290,831	295,051	299,270	303,489	307,709	328,806	**42,195**
Total VMT	984,340	998,845	1,013,349	1,027,854	1,042,358	1,056,863	1,129,386	**145,045**

[1] Population growth is based on housing development and persons per housing unit factors
[2] Five-year average of building permits is assumed to continue over the next ten years
[3] Source: Bonneville Metropolitan Planning Organization; American Census Bureau OnTheMap
[4] Source: TischlerBise analysis; Institute of Transportation Engineers, Trip Generation, 2017
[5] Source: Institute of Transportation Engineers, *Trip Generation* , 10th Edition (2017)

The Idaho Development Fee Act requires Capital Improvement Plans to be updated regularly, at least once every five years (Idaho Code 67-8208(2)). This report projects revenue and fees based on 10-year forecast in an effort to provide the public and elected officials with illustrative guidance of probable growth demands based on current trends however, per Idaho Code, it is expected that an update to all Capital Improvement Plans included in this study will occur within five years.

PARKS AND RECREATION

The City's Park system includes four types of parks—neighborhood parks, urban/community parks, civic parks, and indoor recreation centers. Neighborhood parks serve a variety of age groups within a limited area or neighborhood and includes areas for both active and passive recreation. Community parks are larger than neighborhood parks and serve several neighborhoods. Community parks include areas for intense recreation activities and passive recreation opportunities. Civic parks are for specialized or single-purpose recreation activities. Indoor recreation centers include specialty use buildings such as aquatic centers, hockey rinks, and recreation centers. The City has maintained a level of service of 0.26 acres per 1,000 persons of neighborhood parks, 6.28 acres of urban/community parks, 0.45 acres of civic parks, and 0.12 acres of indoor recreation centers. The City has also maintained a level of service of a total of approximately 1,367 square feet of indoor recreation space per 1,000 persons.

The Parks and Recreation development impact fee is based on the existing level of service provided for park land and park improvements; and indoor recreation facilities. The use of existing standards means there are no existing infrastructure deficiencies. New development is only paying its proportionate share for growth-related infrastructure.

A summary of the Parks and Recreation CIP is included below in Figure 4. As shown, the following additional infrastructure is needed to maintain current levels of service over the next ten years: 2.3 acres of neighborhood park acres and improvements with an estimated cost of almost $115,400; 55.8 acres of urban/community park acres and improvements estimated to cost $3,539,500; 4.0 acres of civic park land and improvements estimated to cost $761,200; and 12,161 square feet of indoor recreation center estimated to cost $1,781,184. The total projected Parks and Recreation capital improvement costs in current dollars are $6.2 million.

Figure 4. Parks & Recreation Capital Improvement Plan

Level of Service and Cost Factors						
Neighborhood Park LOS	0.26	acres	per 1,000 persons	0.33	improvements	per 1,000 persons
Urban/Community Park LOS	6.28	acres	per 1,000 persons	2.30	improvements	per 1,000 persons
Civic Park LOS	0.45	acres	per 1,000 persons	0.25	improvements	per 1,000 persons
Indoor Rec Center LOS	0.12	acres	per 1,000 persons	1,367	square feet	per 1,000 persons
Neighborhood Park Costs	$30,000	per acre		$16,000	per improvement	
Urban/Community Park Costs	$30,000	per acre		$91,000	per improvement	
Civic Park Costs	$165,000	per acre		$46,000	per improvement	
Indoor Rec Center Costs	$30,000	per acre		$144	per square foot	

Year		Population	Neighborhood Park Acres	Neighborhood Park Impr.	Community Park Acres	Community Park Impr.	Civic Park Acres	Civic Park Impr.	Indoor Rec Center Acres	Indoor Rec Center Sq. Ft.
Base	2021	63,473	16.5	20.900	398.6	145.9	28.5	15.8	7.6	86,767
Year 1	2022	64,362	16.7	21.200	404.1	148.0	28.9	16.0	7.7	87,983
Year 2	2023	65,252	16.9	21.500	409.7	150.0	29.3	16.3	7.8	89,199
Year 3	2024	66,141	17.1	21.800	415.3	152.1	29.7	16.5	7.9	90,415
Year 4	2025	67,031	17.4	22.100	420.9	154.1	30.1	16.7	8.0	91,631
Year 5	2026	67,921	17.6	22.400	426.5	156.2	30.5	16.9	8.1	92,847
Year 6	2027	68,810	17.8	22.700	432.1	158.2	30.9	17.2	8.2	94,063
Year 7	2028	69,700	18.1	23.000	437.7	160.3	31.3	17.4	8.3	95,279
Year 8	2029	70,589	18.3	23.200	443.3	162.3	31.7	17.6	8.4	96,495
Year 9	2030	71,479	18.5	23.500	448.8	164.4	32.1	17.8	8.5	97,711
Year 10	2031	72,369	18.8	23.800	454.4	166.4	32.5	18.0	8.6	98,928
Ten-Year Increase		8,896	2.3	2.9	55.8	20.5	4.0	2.2	1.0	12,161
		Cost per Unit	$30,000	$16,000	$30,000	$91,000	$165,000	$46,000	$30,000	$144
		Growth Related Costs	**$69,000**	**$46,400**	**$1,674,000**	**$1,865,500**	**$660,000**	**$101,200**	**$30,000**	**$1,751,184**

Total Parks & Recreation Ten-Year Growth-Related Cost **$6,197,284**

TRANSPORTATION

Transportation's development impact fee is based on an incremental expansion approach for major and minor arterial needs over a 10-year period. The incremental expansion methodology documents the current level of service provided to development and serves to maintain this as new development occurs. There may be other transportation needs, but only citywide arterial projects are included in the impact fee study. The current level of service is found by comparing the current vehicle miles traveled and the total arterial lane miles. Currently, there are 169.3 lane miles and due to the projected growth, there is a need for 23.4 new lane miles.

Figure 5. Transportation Growth-Related Needs

	Base Year 2021	2022	2023	2024	2025	2026	2027	2028	2029	2030	2031	Total Increase
Single Family Units	19,136	19,440	19,744	20,048	20,352	20,656	20,960	21,264	21,568	21,872	22,176	3,040
Multifamily Units	6,833	6,877	6,921	6,965	7,009	7,053	7,097	7,141	7,185	7,229	7,273	440
Retail KSF	5,668	5,739	5,811	5,883	5,954	6,026	6,097	6,169	6,241	6,312	6,384	716
Office KSF	5,844	5,937	6,030	6,123	6,216	6,308	6,401	6,494	6,587	6,680	6,772	928
Industrial KSF	6,024	6,163	6,301	6,440	6,579	6,718	6,857	6,995	7,134	7,273	7,412	1,388
Institutional KSF	4,783	4,859	4,935	5,011	5,087	5,163	5,239	5,315	5,391	5,467	5,542	760
Single Family Units Trips	117,645	119,514	121,383	123,252	125,121	126,990	128,859	130,728	132,597	134,466	136,335	18,690
Multfamily Units Trips	18,626	18,746	18,866	18,986	19,106	19,226	19,346	19,466	19,586	19,705	19,825	1,199
Residential Subtotal	*136,271*	*138,260*	*140,249*	*142,238*	*144,227*	*146,216*	*148,205*	*150,194*	*152,183*	*154,172*	*156,161*	*19,889*
Retail Trips	81,304	82,331	83,358	84,385	85,413	86,440	87,467	88,494	89,521	90,548	91,575	10,271
Office Trips	28,461	28,913	29,365	29,817	30,270	30,722	31,174	31,626	32,078	32,530	32,982	4,521
Industrial Trips	14,939	15,284	15,628	15,972	16,316	16,660	17,004	17,348	17,692	18,037	18,381	3,441
Institutional Trips	25,636	26,043	26,450	26,857	27,265	27,672	28,079	28,486	28,893	29,301	29,708	4,072
Nonresidential Subtotal	*150,340*	*152,571*	*154,801*	*157,032*	*159,263*	*161,493*	*163,724*	*165,954*	*168,185*	*170,415*	*172,646*	*22,305*
Total Vehicle Trips	286,612	290,831	295,051	299,270	303,489	307,709	311,928	316,148	320,367	324,587	328,806	42,195
Arterial VMT	984,340	998,845	1,013,349	1,027,854	1,042,358	1,056,863	1,071,367	1,085,872	1,100,376	1,114,881	1,129,386	145,045
Arterial Lane Miles	**169.3**	**171.7**	**174.0**	**176.4**	**178.7**	**181.0**	**183.4**	**185.7**	**188.1**	**190.4**	**192.7**	**23.4**

Currently, the average cost to construct a lane mile of arterial roadway is $1,000,000. As a result, growth-related arterial needs cost a total of $23.4 million. However, 25 percent of future road projects are assumed to be funded through federal funding. Additionally, there is a current balance of $1.5 million in the capital fund for road construction. These two elements reduce the future growth-related costs to the City. Overall, the next ten years of growth is estimated to cost the City $16,050,000 in road projects.

Figure 6. Summary of Transportation Growth-Related Needs and Costs

10-Year Arterial Needs (lane miles)	23.4
Average Cost per Lane Mile [1]	$1,000,000
Total 10-Year Growth-Related Costs	**$23,400,000**

Total 10-Year Growth Related Costs	$23,400,000
Federal Funding for Future Projects (25%)	($5,850,000)
Existing Capital Fund Balance	($1,500,000)
City of Idaho Falls Growth-Related Cost	**$16,050,000**

City of Idaho Falls Growth-Related Cost	$16,050,000
10-Year Increase in Vehicle Miles Traveled	145,045
Capital Cost per Vehicle Miles Traveled	**$110.66**

[1] Source: City of Idaho Falls estimated current cost of an arterial lane mile

Similar to the other incremental expansion methodologies, the impact fee study only indicates the level of new capital facilities needed in the next ten years to accommodate growth. However, the City of Idaho Falls has identified four future transportation projects for the next five years (2021-2024 Capital Improvement Plan). Although a portion of these projects may be to serve existing demand, the growth-related portion would be impact fee eligible.

Figure 7. 2021-2024 Transportation Capital Improvement Plan

Project	Cost
Traffic Signal and Rd Widening at N 5th West (East River Rd) and University Blvd	$2,500,000
25th East (Hitt Rd) Widening - 49th South (Township Rd) North 1/2 Mile	$3,000,000
Elm Street Reconstruction Eastern to S Blvd	$1,800,000
E Street Improvements Memorial to Yellowstone	$1,800,000
Total City Cost	$9,100,000

Source: 2021-2024 Capital Improvement Plan

POLICE

The Police development impact fee is based on police vehicles and the planned new police station serving the City of Idaho Falls. Police calls for service, population growth, and vehicle trip growth are used to determine residential and nonresidential proportionate share factors (i.e., how much of the current infrastructure serves residential or nonresidential land uses). The new police station will be constructed to serve the existing demand and future growth. The construction of the station is funded by Certificates

of Participation and the debt will be serviced through 2039. New growth's percentage share of the planned police station is determined by population growth and vehicle trip growth through 2039.

Calculated in Figure 8, the new police station is 61,189 square feet and 44 percent is attributed to residential demand and 56 percent attributed to nonresidential demand. The attributed floor area is then compared to the projected growth through 2039 to find growth's share. As a result, residential growth accounts for 5,424 square feet and nonresidential growth accounts for 7,289 square feet. Based on the debt issued to construct the police station, growth's share results in a $4.2 million cost.

Figure 8. Growth's Share of New Police Station

Facility	Total Square Feet	Residential Share	Residential Floor Area (sq. ft.)	2021 Population	2039 Population	Growth's Share	Residential Growth's Floor Area (sq. ft.)
New Police Station	61,189	44%	26,923	63,473	79,485	20%	**5,424**

Facility	Total Square Feet	Nonresidential Share	Nonresidential Floor Area (sq. ft.)	2021 Vehicle Trips	2039 Vehicle Trips	Growth's Share	Nonresidential Growth's Floor Area (sq. ft.)
New Police Station	61,189	56%	34,266	150,340	190,965	21%	**7,289**

Additionally, shown in Figure 9, ten-year growth is estimated to generate a need for 15.1 new police vehicles, a total cost of $830,500.

Figure 9. Police Vehicle Capital Improvement Plan

Type of Infrastructure	Level of Service			Demand Unit	Cost / Unit
Police Vehicles	Residential	0.72	Vehicles	per 1,000 persons	$55,000
	Nonresidential	0.39		per 1,000 trips	

Growth-Related Need for Police Vehicles						
Year		Population	Nonres. Vehicle Trips	Residential Vehicles	Nonresidential Vehicles	Total Vehicles
Base	2021	63,473	150,340	45.7	58.6	104.3
Year 1	2022	64,362	152,571	46.3	59.5	105.8
Year 2	2023	65,252	154,801	46.9	60.3	107.2
Year 3	2024	66,141	157,032	47.6	61.2	108.8
Year 4	2025	67,031	159,263	48.2	62.1	110.3
Year 5	2026	67,921	161,493	48.9	62.9	111.8
Year 6	2027	68,810	163,724	49.5	63.8	113.3
Year 7	2028	69,700	165,954	50.1	64.7	114.8
Year 8	2029	70,589	168,185	50.8	65.5	116.3
Year 9	2030	71,479	170,415	51.4	66.4	117.8
Year 10	2031	72,369	172,646	52.1	67.3	119.4
Ten-Year Increase		8,896	22,305	**6.4**	**8.7**	**15.1**
			Projected Expenditure	**$352,000**	**$478,500**	**$830,500**

Growth-Related Expenditures for Police Vehicles	$830,500

FIRE/EMS

The Fire/EMS development impact fee includes fire/EMS station facilities, training center, and vehicles and apparatus serving the City of Idaho Falls. Fire/EMS calls for service are used to determine residential and nonresidential proportionate share factors (i.e., how much of the current infrastructure serves residential or nonresidential land uses). Additionally, demand from outside of the City boundaries has been removed from the analysis to accurately capture City-only demand. The City currently maintains 4.28 square feet of station space per service call, 1.88 fire/EMS vehicles per 1,000 service calls, and 9.72 square feet of fire/EMS training facility per service call.

The Fire/EMS development impact fee is based on the existing level of service. The use of existing standards means there are no existing infrastructure deficiencies. New development is only paying its proportionate share for growth-related infrastructure.

A summary of the Fire/EMS CIP is included below in Figure 10. As shown, the following additional infrastructure is needed to maintain current levels of service over the next ten years: 6,031 square feet of station space with an estimated cost of $2.6 million; 2.6 vehicles estimated to cost $837,080; 13,696 square feet of training facility estimated to cost $14,087. The total projected fire/EMS capital improvement costs in current dollars are $3.5 million.

Figure 10. Fire and EMS Capital Improvement Plan

Infrastructure	Level of Service		Demand Unit	Unit Cost
Fire & EMS Stations	4.28	Square Feet	per Calls for Service	$432
Fire & EMS Vehicles	1.88	Vehicles	per 1,000 Calls for Service	$316,000
Fire & EMS Training	9.72	Square Feet	per Calls for Service	$3

Growth-Related Need for Fire & EMS Facilities					
Year		Calls for Service	Total Station Square Feet	Total Vehicles	Total Training Square Feet
Base	2021	9,727	41,632	18.3	94,546
Year 1	2022	9,868	42,235	18.6	95,916
Year 2	2023	10,009	42,838	18.8	97,286
Year 3	2024	10,150	43,441	19.1	98,655
Year 4	2025	10,291	44,044	19.3	100,025
Year 5	2026	10,432	44,647	19.6	101,394
Year 6	2027	10,572	45,250	19.9	102,764
Year 7	2028	10,713	45,853	20.1	104,134
Year 8	2029	10,854	46,456	20.4	105,503
Year 9	2030	10,995	47,059	20.7	106,873
Year 10	2031	11,136	47,662	20.9	108,242
Ten-Year Increase		1,409	**6,031**	**2.6**	**13,696**
Projected Expenditure			**$2,605,249**	**$837,080**	**$41,087**

Total Growth-Related Expenditures for Fire & EMS Facilities	$3,483,416

FUNDING SOURCES FOR CAPITAL IMPROVEMENTS

In determining the proportionate share of capital costs attributable to new development, the Idaho Development Fee Act states that local governments must consider historical, available, and alternative sources of funding for system improvements (Idaho Code 67-8209(2)). Currently, the City of Idaho Falls charges a Bridge and Arterial Streets Fee to help mitigate construction costs for bridges and streets. The fee is formulated based on the number of parking spaces needed for the development. The Transportation Development Impact Fee is meant to replace the Bridge and Arterial Streets Fee, so no credit is included in the development impact fee for future revenue from that funding source. Additionally, there are no other dedicated revenues currently being collected by the City to fund growth-related projects for Parks & Recreation, Transportation, Police, and Fire/EMS.

Furthermore, the maximum supportable impact fees are constructed to offset all growth-related capital costs to the City for Parks & Recreation, Transportation, Police, and Fire/EMS facilities. Evidence is given in Figure 11 and in the specific chapters of this report that the projected capital costs from new development will be entirely offset by the development impact fees. Thus, no general tax dollars are assumed to be used to fund growth-related capital costs, requiring no further revenue credits.

Potential development impact fee revenues are summarized in Figure 11, assuming implementation of the fees at the maximum supportable level as indicated in this report. Because each type of development impact fee must be accounted for separately, TischlerBise has provided cash flow summaries in the development impact fee study for each type of public facility. Based on the land use assumptions detailed in the Appendix, over the next ten years Parks & Recreation development impact fees are projected to generate approximately $6.2 million; Transportation impact fees $16.1 million; Police impact fees $5 million; Fire/EMS impact fees $3.5 million. At the bottom of the figure, the estimated revenues are compared to the estimated growth-related capital costs. For each public facility type, the impact fee revenues are projected to offset all the capital costs. Note: the small remainder for Police funding is the result of rounding in calculations.

Figure 11. Projected Development Impact Fee Revenue

	Ten-Year Revenue Projections			
Development Type	**Parks & Recreation**	**Transp.**	**Police**	**Fire/EMS**
Residential				
Single Family	$5,636,160	$9,159,520	$1,948,640	$1,577,760
Multifamily	$564,080	$587,840	$194,920	$183,920
Nonresidential				
Retail	-	$2,745,917	$1,304,579	$330,799
Office	-	$1,336,723	$573,677	$71,478
Industrial	-	$1,017,114	$437,095	$51,341
Institutional	-	$1,204,106	$517,348	$1,267,920
Ten-Year Revenue	$6,200,000	$16,051,000	$4,976,000	$3,483,000
Ten-Year City Capital Costs	$6,197,000	$16,050,000	$4,983,000	$3,483,000
Non-Impact Fee Funding	$0	$0	$7,000	$0

PARKS & RECREATION DEVELOPMENT IMPACT FEE ANALYSIS

The Parks & Recreation development impact fee is based on the cost per service unit method specified in Idaho Code 67-8204(16), also referred to as the incremental expansion method elsewhere in this report. Parks & Recreation capital improvements are allocated 100 percent to residential development. Per the Idaho Act, a service unit is a person.

The Parks & Recreation infrastructure components included in the impact fee analysis are:

- Neighborhood Park Land & Improvements
- Urban/Community Parks Land & Improvements
- Civic Parks Land & Improvements
- Indoor Recreation Centers Land & Improvements

Specified in Idaho Code 67-8209(2), local governments must consider historical, available, and alternative sources of funding for system improvements. Currently, there are no dedicated revenues being collected by the City to fund growth-related projects for Parks & Recreation facilities. Furthermore, the maximum supportable impact fees are constructed to offset all growth-related capital costs for Parks & Recreation facilities. Evidence is given in this chapter that the projected capital costs from new development will be entirely offset by the development impact fees. Thus, no general tax dollars are assumed to be used to fund growth-related capital costs, requiring no further revenue credits.

PARKS & RECREATION LEVEL OF SERVICE AND COST ANALYSIS

The following section details the level of service calculations and capital cost per person for each infrastructure category.

NEIGHBORHOOD PARK LAND AND PARK IMPROVEMENTS – INCREMENTAL EXPANSION

Listed in Figure 12, there is a total of 16.4 acres of neighborhood park land and 21 improvements within the parks. With a population of 63,473, the level of service is found to be 0.26 acres of neighborhood park land and 0.33 neighborhood park improvements per 1,000 persons. The level of service is combined with the average cost per acre/improvement to find the capital cost per person. Based on available information regarding land costs in Idaho Falls, City staff anticipates future neighborhood park land to cost $30,000 per acre. The average improvement cost is based on the replacement costs of the current improvements at each park.

As a result, the neighborhood park component of the impact fee is $8 per person for land and $5 per person for improvements (0.26 acres per 1,000 persons x $30,000 per acre = $8 per person, rounded).

Figure 12. Neighborhood Park Level of Service & Cost Analysis

Neighborhood Parks	Acres	Park Improvements	Improvement Replacement Cost [1]
20th Street Park	1.0	2	$25,000
Antares Park	1.1	2	$25,000
Bel-Aire Park	1.2	2	$25,000
Dunes Park	2.4	2	$25,000
Kate Curley Park	3.7	4	$126,000
Liberty Park	0.8	2	$25,000
Poitevin Park	2.8	2	$25,000
Waterford Storm Pond #1	1.9	1	$2,500
Waterford Storm Pond #2	1.2	2	$25,000
Willowbrook Park	0.4	2	$25,000
Total	16.4	21	$328,500

Level-of-Service Standards	Park Land	Park Improvements
Residential Share	100%	100%
Share of Acreage and Improvements	16.4	21
2021 Population	63,473	63,473
Acres/Improvements per 1,000 Persons	**0.26**	**0.33**

Cost Analysis	Park Land	Park Improvements
Acres/Improvements per 1,000 Persons	0.26	0.33
Average Cost per Acre/Improvement [2]	$30,000	$16,000
Capital Cost Per Person	**$8**	**$5**

[1] Source: City of Idaho Falls Parks & Recreation
[2] Source: Based on available information regarding land costs in Idaho Falls, City staff anticipates future park land to cost $30,000 per acre.

URBAN/COMMUNITY PARK LAND AND PARK IMPROVEMENTS – INCREMENTAL EXPANSION

Listed in Figure 13, there is a total of 398.8 acres of urban/community park land and 146 improvements within the parks. With a population of 63,473, the level of service is found to be 6.28 acres of urban/community park land and 2.30 urban/community park improvements per 1,000 persons. The level of service is combined with the average cost per acre/improvement to find the capital cost per person. Based on available information regarding land costs in Idaho Falls, City staff anticipates future neighborhood park land to cost $30,000 per acre. The average improvement cost is based on the replacement costs of the current improvements at each park.

As a result, the urban/community park component of the impact fee is $188 per person for land and $209 per person for improvements (6.28 acres per 1,000 persons x $30,000 per acre = $188 per person, rounded).

Figure 13. Urban/Community Park Level of Service & Cost Analysis

Urban/Community Parks	Acres	Park Improvements	Improvement Replacement Cost [1]
Central Park	8.1	5	$727,592
Civitan Park	3.0	5	$442,296
Community Park	30.3	11	$1,540,046
Compass Academy Skate Park	0.5	1	$100,000
Esquire Acres Park	10.4	7	$488,696
Freeman Park	60.8	11	$995,354
Highland Park and Melaleuca	4.3	5	$442,296
Lincoln Park	6.4	8	$878,592
North Tourist Park	2.1	3	$95,000
Reinhart Park	9.3	5	$442,296
Rollandet Park	8.4	6	$1,043,888
Ryder Park	39.5	6	$292,762
Snake River Animal Park	2.5	4	$134,500
Soccer Complex - Old Butte	85.8	18	$575,600
South Tourist Park	9.7	3	$169,762
Sugar Mill Substation Park	7.6	5	$683,392
Sunnyside Park	20.4	16	$1,437,288
Taupthaus Park	76.1	17	$1,980,684
Tennis Courts IFHS	0.5	4	$240,000
Tennis Courts SHHS	0.5	4	$240,000
Troy Ave Storm Pond	12.8	2	$318,796
Total	398.8	146	$13,268,842

Level-of-Service Standards	Park Land	Park Improvements
Residential Share	100%	100%
Share of Acreage and Improvements	398.8	146
2021 Population	63,473	63,473
Acres/Improvements per 1,000 Persons	**6.28**	**2.30**

Cost Analysis	Park Land	Park Improvements
Acres/Improvements per 1,000 Persons	6.28	2.30
Average Cost per Acre/Improvement [2]	$30,000	$91,000
Capital Cost Per Person	**$188**	**$209**

[1] Source: City of Idaho Falls Parks & Recreation
[2] Source: Based on available information regarding land costs in Idaho Falls, City staff anticipates future park land to cost $30,000 per acre.

Civic Park Land and Park Improvements – Incremental Expansion

Listed in Figure 14, there is a total of 28.7 acres of civic park land and 16 improvements within the parks. With a population of 63,473, the level of service is found to be 0.45 acres of civic park land and 0.25 civic park improvements per 1,000 persons. The level of service is combined with the average cost per acre/improvement to find the capital cost per person. The cost for civic park land is based on the 2020 appraisal of Capital Park-South Park, $165,000 per acre. The cost of land for this park type is anticipated

to be more expensive than other park types because of its location, along the greenbelt. The average improvement cost is based on the replacement costs of the current improvements at each park.

As a result, the civic park component of the impact fee is $74 per person for land and $12 per person for improvements (0.45 acres per 1,000 persons x $165,000 per acre = $74 per person, rounded).

Figure 14. Civic Park Land Level of Service & Cost Analysis

Civic Parks	Acres	Park Improvements	Improvement Replacement Cost [1]
Capital Park-South	5.2	4	$126,000
Civitan Plaza	0.1	1	$2,500
Eagle Rock Plaza	0.5	3	$103,500
River Walk Eastside	10.4	3	$169,762
River Walk Westside	11.8	3	$169,762
Rock Garden @ Taylor Crossing (Spring Hills)	0.8	2	$167,262
Total	28.7	16	$738,787

Level-of-Service Standards	Park Land	Park Improvements
Residential Share	100%	100%
Share of Acreage and Improvements	28.7	16
2021 Population	63,473	63,473
Acres/Improvements per 1,000 Persons	**0.45**	**0.25**

Cost Analysis	Park Land	Park Improvements
Acres/Improvements per 1,000 Persons	0.45	0.25
Average Cost per Acre/Improvement [2]	$165,000	$46,000
Capital Cost Per Person	**$74**	**$12**

[1] Source: City of Idaho Falls Parks & Recreation
[2] In 2020, Capital Park-South along the greenbelt appraised for an average of $165,000 per acre.

Indoor Recreation Center Land and Square Footage – Incremental Expansion

Listed in Figure 15, there is a total of 7.64 acres and 86,798 square feet of indoor recreation space within Idaho Falls. With a population of 63,473, the level of service is found to be 0.12 acres and 1,367 square feet of indoor recreation space per 1,000 persons. The level of service is combined with the average cost per acre/square foot to find the capital cost per person. As a result, the indoor recreation space component of the impact fee is $4 per person for land and $197 per person for square feet (1,367 square feet per 1,000 persons x $144 per square foot = $197 per person, rounded).

Figure 15. Indoor Recreation Center Level of Service & Cost Analysis

Indoor Recreation Centers	Acres	Square Feet [1]	Replacement Cost [1]
Activity Center/ Recreation Building	2.75	12,313	$1,581,127
Recreation Center	0.50	19,160	$3,057,046
Aquatic Center	2.53	19,501	$3,533,803
Hockey Rink Building	1.86	35,824	$4,290,721
	7.64	86,798	$12,462,697

Level-of-Service Standards	Land	Square Feet
Residential Share	100%	100%
Share of Square Feet	7.64	86,798
2021 Population	63,473	63,473
Acres/Square Feet per 1,000 Persons	**0.12**	**1,367**

Cost Analysis	Land	Square Feet
Acres/Square Feet per 1,000 Persons	0.12	1,367
Average Cost per Acre/Square Feet [2]	$30,000	$144
Capital Cost Per Person	**$4**	**$197**

[1] Source: Insurance valuation report
[2] Source: Based on available information regarding land costs in Idaho Falls, City staff anticipates future park land to cost $30,000 per acre.

PARKS & RECREATION CAPITAL IMPROVEMENTS NEEDED TO SERVE GROWTH

Needs due to future growth were calculated using the levels of service and cost factors for the infrastructure components. Growth-related needs are a projection of the amount of existing infrastructure and estimated costs over a specified period needed to maintain levels of service for expected unit increases.

NEIGHBORHOOD PARK LAND AND IMPROVEMENTS

The current level of service of 0.26 acres per 1,000 persons is combined with the population projections to illustrate the need for neighborhood park land. Shown in Figure 16, over the next ten years, there is a need for 2.3 new acres of neighborhood parks. The average cost per acre ($30,000) is multiplied by the need to find the projected capital need from growth ($69,000).

The current level of service of 0.33 improvements per 1,000 persons is combined with the population projections to illustrate the need for neighborhood park improvements. Shown in Figure 16, over the next ten years, there is a need for 2.9 new improvements in neighborhood parks. The average cost per improvement ($16,000) is multiplied by the need to find the projected capital need from growth ($46,400).

Figure 16. Project Demand for Neighborhood Park Improvements

Infrastructure	Level of Service			Cost/Unit
Neighborhood Parks	0.26	Acres	per 1,000 persons	$30,000
	0.33	Improvements	per 1,000 persons	$16,000

Growth-Related Need for Neighborhood Parks				
Year		Population	Park Acres	Park Improvements
Base	2021	63,473	16.5	20.9
Year 1	2022	64,362	16.7	21.2
Year 2	2023	65,252	16.9	21.5
Year 3	2024	66,141	17.1	21.8
Year 4	2025	67,031	17.4	22.1
Year 5	2026	67,921	17.6	22.4
Year 6	2027	68,810	17.8	22.7
Year 7	2028	69,700	18.1	23.0
Year 8	2029	70,589	18.3	23.2
Year 9	2030	71,479	18.5	23.5
Year 10	2031	72,369	18.8	23.8
Ten-Year Increase		8,896	**2.3**	**2.9**
		Projected Expenditure	**$69,000**	**$46,400**

Growth-Related Expenditures for Neighborhood Parks	**$115,400**

URBAN/COMMUNITY PARK LAND AND IMPROVEMENTS

The current level of service of 6.28 acres per 1,000 persons is combined with the population projections to illustrate the need for urban/community park land. Shown in Figure 17, over the next ten years, there is a need for 55.8 new acres of improved urban/community parks. The average cost per acre ($30,000) is multiplied by the need to find the projected capital need from growth ($1,674,000).

The current level of service of 2.30 improvements per 1,000 persons is combined with the population projections to illustrate the need for urban/community park improvements. Shown in Figure 17, over the next ten years, there is a need for 20.5 new improvements in urban/community parks. The average cost per improvement ($91,000) is multiplied by the need to find the projected capital need from growth ($1,865,500).

Figure 17. Projected Demand for Urban/Community Park Improvements

Infrastructure	Level of Service			Cost/Unit
Urban/Community Parks	6.28	Acres	per 1,000 persons	$30,000
	2.30	Improvements	per 1,000 persons	$91,000

Growth-Related Need for Urban/Community Parks				
Year		Population	Park Acres	Park Improvements
Base	2021	63,473	398.6	145.9
Year 1	2022	64,362	404.1	148.0
Year 2	2023	65,252	409.7	150.0
Year 3	2024	66,141	415.3	152.1
Year 4	2025	67,031	420.9	154.1
Year 5	2026	67,921	426.5	156.2
Year 6	2027	68,810	432.1	158.2
Year 7	2028	69,700	437.7	160.3
Year 8	2029	70,589	443.3	162.3
Year 9	2030	71,479	448.8	164.4
Year 10	2031	72,369	454.4	166.4
Ten-Year Increase		8,896	**55.8**	**20.5**
		Projected Expenditure	**$1,674,000**	**$1,865,500**

Growth-Related Expenditures for Urban/Community Parks	**$3,539,500**

Civic Park Land and Improvements

The current level of service of 0.45 acres per 1,000 persons is combined with the population projections to illustrate the need for civic park land. Shown in Figure 18, over the next ten years, there is a need for 4.0 new acres of improved civic parks. The average cost per acre ($165,000) is multiplied by the need to find the projected capital need from growth ($660,000).

The current level of service of 0.25 improvements per 1,000 persons is combined with the population projections to illustrate the need for civic park improvements. Shown in Figure 18, over the next ten years, there is a need for 2.2 new improvements in civic parks. The average cost per improvement ($46,000) is multiplied by the need to find the projected capital need from growth ($101,200).

Figure 18. Projected Demand for Civic Park Improvements

Infrastructure	Level of Service			Cost/Unit
Civic Parks	0.45	Acres	per 1,000 persons	$165,000
	0.25	Improvements	per 1,000 persons	$46,000

Growth-Related Need for Civic Parks				
Year		Population	Park Acres	Park Improvements
Base	2021	63,473	28.5	15.8
Year 1	2022	64,362	28.9	16.0
Year 2	2023	65,252	29.3	16.3
Year 3	2024	66,141	29.7	16.5
Year 4	2025	67,031	30.1	16.7
Year 5	2026	67,921	30.5	16.9
Year 6	2027	68,810	30.9	17.2
Year 7	2028	69,700	31.3	17.4
Year 8	2029	70,589	31.7	17.6
Year 9	2030	71,479	32.1	17.8
Year 10	2031	72,369	32.5	18.0
Ten-Year Increase		8,896	**4.0**	**2.2**
		Projected Expenditure	**$660,000**	**$101,200**

Growth-Related Expenditures for Civic Parks	**$761,200**

Indoor Recreation Center Land and Square Footage

The current level of service of 0.12 acres per 1,000 persons is combined with the population projections to illustrate the need for indoor recreation center land. Shown in Figure 19, over the next ten years, there is a need for 1.0 new acre of improved indoor recreation center land. The average cost per acre ($30,000) is multiplied by the need to find the projected capital need from growth ($30,000).

The current level of service of 1,367 square feet per 1,000 persons is combined with the population projections to illustrate the need for indoor recreation center square footage. Shown in Figure 19, over the next ten years, there is a need for 12,161 new square feet in indoor recreation centers. The average cost per square foot ($144) is multiplied by the need to find the projected capital need from growth ($1,751,170).

Figure 19. Projected Demand for Indoor Recreation Center Square Feet

Infrastructure	Level of Service			Cost/Unit
Indoor Rec Center Facilities	0.12	Acres	per 1,000 persons	$30,000
	1,367	Improvements	per 1,000 persons	$144

Growth-Related Need for Indoor Rec Center Facilities				
Year		Population	Park Acres	Square Feet
Base	2021	63,473	7.6	86,767
Year 1	2022	64,362	7.7	87,983
Year 2	2023	65,252	7.8	89,199
Year 3	2024	66,141	7.9	90,415
Year 4	2025	67,031	8.0	91,632
Year 5	2026	67,921	8.1	92,848
Year 6	2027	68,810	8.2	94,064
Year 7	2028	69,700	8.3	95,280
Year 8	2029	70,589	8.4	96,496
Year 9	2030	71,479	8.5	97,712
Year 10	2031	72,369	8.6	98,928
Ten-Year Increase		8,896	**1.0**	**12,161**
		Projected Expenditure	**$30,000**	**$1,751,170**

Growth-Related Expenditures for Indoor Rec Center Facilities	**$1,781,170**

PARKS & RECREATION INPUT VARIABLES AND DEVELOPMENT IMPACT FEES,854.

Figure 20 provides a summary of the input variables (described in the chapter sections above) used to calculate the net cost per person of neighborhood parks, urban/community parks, civic parks, and indoor recreation centers. The Parks & Recreation impact fees are the product of persons per housing unit, by type, multiplied by the total net cost per person. Fees are provided for the single family and multifamily housing type. An example of the calculation for a single family unit is: the net cost per person ($697) multiplied by the persons per housing unit for that size unit (2.66) to arrive at the development impact fee per average single family unit of $1,854.

Figure 20. Parks & Recreation Maximum Supportable Impact Fees

Fee Component	Land Cost per Person	Improvement Cost per Person
Neighborhood Parks	$8	$5
Urban/Community Parks	$188	$209
Civic Parks	$74	$12
Indoor Recreation Centers	$4	$197
Gross Total	$274	$423
Net Total	**$274**	**$423**

Residential

Housing Type	Persons per Housing Unit	Maximum Supportable Fee
Single Family	2.66	**$1,854**
Multifamily	1.84	**$1,282**

CASH FLOW PROJECTIONS FOR PARKS & RECREATION MAXIMUM SUPPORTABLE IMPACT FEE

This section summarizes the potential cash flow to the City of Idaho Falls if the Parks & Recreation development impact fee is implemented at the maximum supportable amounts. The cash flow projections are based on the assumptions detailed in this chapter and the development projections discussed in Appendix B.

At the top of Figure 21, the cost for growth over the next ten years is listed. The summary provides an indication of the impact fee revenue generated by new development. For example, with a ten-year increase of 3,040 single family housing units and a maximum supportable impact fee of $1,854 per single family housing unit there is a projected revenue of $5,636,160. Shown at the bottom of the figure, the maximum supportable Parks & Recreation impact fee is estimated to cover all growth-related capital costs.

Figure 21. Projected Revenue for Parks & Recreation Maximum Supportable Impact Fee

Infrastructure Costs for Park Facilities

	Total Cost	Growth Cost
Neighborhood Parks	$115,400	$115,400
Urban/Community Parks	$3,539,500	$3,539,500
Civic Parks	$761,200	$761,200
Indoor Recreation Centers	$1,781,184	$1,781,184
Total Expenditures	**$6,197,284**	**$6,197,284**

Projected Development Impact Fee Revenue

		Single Family $1,854 per unit	Multifamily $1,282 per unit	Retail $0 per KSF	Office $0 per KSF	Industrial $0 per KSF	Institutional $0 per KSF
Year		**Housing Units**	**Housing Units**	**KSF**	**KSF**	**KSF**	**KSF**
Base	2021	19,136	6,833	5,668	5,844	6,024	4,783
Year 1	2022	19,440	6,877	5,739	5,937	6,163	4,859
Year 2	2023	19,744	6,921	5,811	6,030	6,301	4,935
Year 3	2024	20,048	6,965	5,883	6,123	6,440	5,011
Year 4	2025	20,352	7,009	5,954	6,216	6,579	5,087
Year 5	2026	20,656	7,053	6,026	6,308	6,718	5,163
Year 6	2027	20,960	7,097	6,097	6,401	6,857	5,239
Year 7	2028	21,264	7,141	6,169	6,494	6,995	5,315
Year 8	2029	21,568	7,185	6,241	6,587	7,134	5,391
Year 9	2030	21,872	7,229	6,312	6,680	7,273	5,467
Year 10	2031	22,176	7,273	6,384	6,772	7,412	5,542
Ten-Year Increase		3,040	440	716	928	1,388	760
Projected Revenue		$5,636,160	$564,080	$0	$0	$0	$0
						Projected Revenue =>	**$6,200,000**
						Total Expenditures =>	**$6,197,000**
						Non-Impact Fee Funding =>	**$0**

TRANSPORTATION DEVELOPMENT IMPACT FEE ANALYSIS

METHODOLOGY

The City of Idaho Falls Transportation impact fees are calculated using an incremental expansion approach for major and minor arterial needs over a 10-year period. The incremental expansion methodology documents the current level of service provided to development and serves to maintain this as new development occurs.

The transportation system in the City of Idaho Falls includes roads, streets, arterials, and collectors in addition to multimodal pathways and bike lanes. Reasonably allocating the cost of transportation system improvements requires consideration of several transportation planning challenges. Because street networks are "open" systems, newly expanded capacity can be readily absorbed by driver adaptations. For example, drivers may change their route of travel, departure times and even mode (i.e., automobile, bicycle, walking, or transit) to take advantage of street improvements.

Vehicular travel within a jurisdiction requires a system of controlled access streets, major and minor arterials, collectors, major access roads, and local streets. However, streets development impact fees typically are based on a subset of the system reflecting streets to be funded in whole or part by the locality as opposed to other sources (e.g., federal, state, private) as well as other considerations discussed below.

To clarify the question of who pays for what for transportation improvements, it is useful to distinguish between project-level improvements and system improvements (i.e., infrastructure that benefits multiple development projects and typically located offsite). The need for project-level improvements may be addressed through development exactions that remain roughly proportional to the specific project. Project-level improvements are typically specified in a development agreement or similar instrument and should be distinguished from the need for system improvements, determined by adopted standards. Because system improvements are larger and more costly, they typically require funding from multiple development projects and/or broad-based revenues. Thus, only future growth-related capital costs for arterial roadway improvements are included in the development impact fee analysis.

Specified in Idaho Code 67-8209(2), local governments must consider historical, available, and alternative sources of funding for system improvements. Currently, the City of Idaho Falls charges a Bridge and Arterial Streets Fee to help mitigate construction costs for bridges and streets. The fee is formulated based on the number of parking spaces needed for the development. The Transportation Development Impact Fee is meant to replace the Bridge and Arterial Streets Fee, so no credit is included in the development impact fee for future revenue from that funding source.

Furthermore, the maximum supportable impact fees are constructed to offset all growth-related capital costs to the City for major and minor arterial transportation facilities. Evidence is given in this chapter that

the projected capital costs from new development will be entirely offset by the development impact fees. Thus, no general tax dollars are assumed to be used to fund growth-related capital costs, requiring no further revenue credits.

DEMAND FOR TRANSPORTATION INFRASTRUCTURE

The City of Idaho Falls has planned several roads improvement projects intended to increase capacity and service new development. To estimate new development's share of costs associated with these projects, TischlerBise has developed a travel demand model for the City of Idaho Falls. This model serves to establish the base year characteristics of demand for transportation services and, using the residential and nonresidential projections outlined in Appendix B, estimate the pace of future development's demand on the City's arterial network.

The steps to calculate a current level of service for the City of Idaho Fall's street network involve calibrating existing development to the arterial street network (major and minor arterials). To do so, development units by type are multiplied by adjusted vehicle trip ends per development unit and shown below in Figure 22.

TRIP LENGTH WEIGHTING FACTOR BY TYPE OF LAND USE

The Transportation impact fees methodology includes a percentage adjustment, or weighting factor, to account for trip length variation by type of land use. As documented in the 2009 National Household Travel Survey, vehicle trips from residential development are approximately 121 percent of the average trip length. The residential trip length adjustment factor includes data on home-base work trips, social, and recreational purposes. Conversely, shopping trips associated with commercial development are roughly 66 percent of the average trip length while other nonresidential development typically accounts for trips that are 73 percent of the average for all trips.

LANE CAPACITY

Transportation impact fees are based on established daily per-lane capacities for each classification of roadways. The daily per-lane capacity of arterials in Idaho Falls was established to be 6,200. The capacity for arterials is used to calculate vehicle miles of travel (VMT) on the city street network to reflect the ability of roads to absorb additional VMT before reaching capacity.

SUMMARY OF DEMAND MODEL INPUTS

Knowing the City's current inventory of arterial lane miles (169.3), TischlerBise determined a weighted-average trip length of 3.66 miles on the current system using a series of spreadsheet iterations. As shown in Figure 22 below, based on the trip generation, trip adjustment, and trip length factors discussed above, are used in order to determine vehicle miles of travel.

Figure 22. Summary of Travel Demand Input Variables

Land Use	ITE Codes	Daily Vehicle Trip Ends	Trip Adj. Factor	Average Trip Length (miles)	Trip Length Wgt. Factor
Residential (per housing unit)					
Single Family	210	10.60	58%	3.66	121%
Multifamily	220	4.70	58%	3.66	121%
Nonresidential (per 1,000 square feet)					
Retail	820	37.75	38%	3.66	66%
Office	710	9.74	50%	3.66	73%
Industrial	110	4.96	50%	3.66	73%
Institutional	610	10.72	50%	3.66	73%

Source: Institute of Transportation Engineers, *Trip Generation*, 10th Edition (2017); National Household Travel Survey, 2009

PROJECTED TRAVEL DEMAND

The projected need for system lane miles is a function of the ten-year development forecast (see Appendix B) and the existing infrastructure standards discussed above. A typical vehicle trip, such as a person leaving their home and traveling to work, generally begins on a local street that connects to a collector street, which connects to an arterial road and eventually to a state or interstate highway. For the purpose of impact fees, this progression of travel up and down the functional classification chain narrows the average trip length determination to the following question, "what is the average vehicle trip length on transportation impact fee system improvements (i.e., the same type of streets used to document current infrastructure standards)?"

As shown in Figure 23, new development increases vehicle miles of travel on arterial roads from 984,340 in 2021 to 1,129,386 in 2031, for a net increase of 145,045 VMT. When VMT is compared to the current infrastructure (existing level of service) standards discussed previously new development generates the need for an additional 23.4 lane miles of City-maintained arterial roads in the next 10 years.

Figure 23. Arterial Road Transportation Improvement Demand Model

	Base Year 2021	2022	2023	2024	2025	2026	2027	2028	2029	2030	2031	Total Increase
Single Family Units	19,136	19,440	19,744	20,048	20,352	20,656	20,960	21,264	21,568	21,872	22,176	3,040
Multifamily Units	6,833	6,877	6,921	6,965	7,009	7,053	7,097	7,141	7,185	7,229	7,273	440
Retail KSF	5,668	5,739	5,811	5,883	5,954	6,026	6,097	6,169	6,241	6,312	6,384	716
Office KSF	5,844	5,937	6,030	6,123	6,216	6,308	6,401	6,494	6,587	6,680	6,772	928
Industrial KSF	6,024	6,163	6,301	6,440	6,579	6,718	6,857	6,995	7,134	7,273	7,412	1,388
Institutional KSF	4,783	4,859	4,935	5,011	5,087	5,163	5,239	5,315	5,391	5,467	5,542	760
Single Family Units Trips	117,645	119,514	121,383	123,252	125,121	126,990	128,859	130,728	132,597	134,466	136,335	18,690
Multfamily Units Trips	18,626	18,746	18,866	18,986	19,106	19,226	19,346	19,466	19,586	19,705	19,825	1,199
Residential Subtotal	*136,271*	*138,260*	*140,249*	*142,238*	*144,227*	*146,216*	*148,205*	*150,194*	*152,183*	*154,172*	*156,161*	*19,889*
Retail Trips	81,304	82,331	83,358	84,385	85,413	86,440	87,467	88,494	89,521	90,548	91,575	10,271
Office Trips	28,461	28,913	29,365	29,817	30,270	30,722	31,174	31,626	32,078	32,530	32,982	4,521
Industrial Trips	14,939	15,284	15,628	15,972	16,316	16,660	17,004	17,348	17,692	18,037	18,381	3,441
Institutional Trips	25,636	26,043	26,450	26,857	27,265	27,672	28,079	28,486	28,893	29,301	29,708	4,072
Nonresidential Subtotal	*150,340*	*152,571*	*154,801*	*157,032*	*159,263*	*161,493*	*163,724*	*165,954*	*168,185*	*170,415*	*172,646*	*22,305*
Total Vehicle Trips	286,612	290,831	295,051	299,270	303,489	307,709	311,928	316,148	320,367	324,587	328,806	42,195
Arterial VMT	984,340	998,845	1,013,349	1,027,854	1,042,358	1,056,863	1,071,367	1,085,872	1,100,376	1,114,881	1,129,386	145,045
Arterial Lane Miles	**169.3**	**171.7**	**174.0**	**176.4**	**178.7**	**181.0**	**183.4**	**185.7**	**188.1**	**190.4**	**192.7**	**23.4**

ROADS IMPROVEMENTS – INCREMENTAL EXPANSION

As shown in Figure 23, new development increases vehicle miles traveled (VMT) on arterial roads from 984,340 in 2021 to 1,129,386 in 2031, for a net increase of 145,045 VMT and will generate the need for an additional 23.4 lane miles of City-maintained arterial roads in the next 10 years. At an average cost of $1 million per lane mile, the 23.4 lane miles increase is projected to cost approximately $23.4 million.

However, based on previous and future funding of projects, City staff anticipates federal funding providing 25 percent of the total cost. This results in a reduction of $5,850,000 to the City's future burden over the next ten years. Additionally, there is an existing balance of $1,500,000 in capital funds for road projects. This will be used to fund future projects, further reducing the City's burden. As a result, the growth-related cost to the City of Idaho Falls is $16,050,000.

As shown in Figure 24, the City's cost is compared to the increase in VMT and results in a capital cost of $110.66 per vehicle miles traveled ($16,050,0000 ten-year City cost / 145,045 VMT ten-year increase = $110.66 per VMT, rounded).

Figure 24. Summary of Growth-Related Arterial Needs

10-Year Arterial Needs (lane miles)	23.4
Average Cost per Lane Mile [1]	$1,000,000
Total 10-Year Growth-Related Costs	**$23,400,000**

Total 10-Year Growth Related Costs	$23,400,000
Federal Funding for Future Projects (25%)	($5,850,000)
Existing Capital Fund Balance	($1,500,000)
City of Idaho Falls Growth-Related Cost	**$16,050,000**

City of Idaho Falls Growth-Related Cost	$16,050,000
10-Year Increase in Vehicle Miles Traveled	145,045
Capital Cost per Vehicle Miles Traveled	**$110.66**

[1] Source: City of Idaho Falls estimated current cost of an arterial lane mile

TRANSPORTATION INPUT VARIABLES AND DEVELOPMENT IMPACT FEES

Figure 25 provides a summary of the input variables used to calculate the net cost per VMT for transportation capital infrastructure.

The Transportation Impact Fees are the product of average daily vehicle trip ends, trip adjustment rates, average miles per vehicle trip, and trip length weighting combined with the cost per VMT. Fees are provided for both residential and nonresidential development types. An example of the calculation for a single family unit is: the net cost per VMT ($110.66) multiplied by the average daily vehicle trip ends (10.60), trip adjustment rate (58%), average miles per vehicle trip (3.66), and trip length weighting (121%), to arrive at the development impact fee per average single family unit of $3,013.

Figure 25. Transportation Input Variables and Maximum Supportable Impact Fees

Fee Component	Cost per VMT
10-Year Capital Needs	$110.66
Gross Total	$110.66
Net Total	**$110.66**

Development Type	Ave. Daily Veh. Trip Ends	Trip Rate Adjustment	Ave. Miles per Veh. Trip	Trip Length Weighting	Maximum Supportable Fee
Residential (per housing unit)					
Single Family	10.60	58%	3.66	121%	**$3,013**
Multifamily	4.70	58%	3.66	121%	**$1,336**
Nonresidential (per 1,000 square feet)					
Retail	37.75	38%	3.66	66%	**$3,835**
Office/Service	9.74	50%	3.66	73%	**$1,440**
Industrial	4.96	50%	3.66	73%	**$733**
Institutional	10.72	50%	3.66	73%	**$1,585**

CASH FLOW PROJECTIONS FOR TRANSPORTATION MAXIMUM SUPPORTABLE IMPACT FEE

This section summarizes the potential cash flow to the City of Idaho Falls, if the Transportation Development Impact Fee is implemented at the maximum supportable amounts. The cash flow projections are based on the assumptions detailed in this chapter and the development projections discussed in Appendix B.

At the top of Figure 26, the cost for growth over the next ten years is listed. The summary provides an indication of the impact fee revenue generated by new development. For example, with a ten-year increase of 3,040 single family housing units and a maximum supportable impact fee of $3,013 per single family housing unit there is a projected revenue of $9,159,520. Shown at the bottom of the figure, the maximum supportable Transportation Impact Fee is estimated to cover all growth-related capital costs.

Figure 26. Cash Flow Summary for Transportation

Infrastructure Costs for Road Facilities

	Total Cost	City Cost
10-Year Capital Needs	$23,400,000	$16,050,000
Total Expenditures	**$23,400,000**	**$16,050,000**

Projected Development Impact Fee Revenue

		Single Family $3,013 per unit	Multifamily $1,336 per unit	Retail $3,835 per KSF	Office $1,440 per KSF	Industrial $733 per KSF	Institutional $1,585 per KSF
Year		**Housing Units**	**Housing Units**	**KSF**	**KSF**	**KSF**	**KSF**
Base	2021	19,136	6,833	5,668	5,844	6,024	4,783
Year 1	2022	19,440	6,877	5,739	5,937	6,163	4,859
Year 2	2023	19,744	6,921	5,811	6,030	6,301	4,935
Year 3	2024	20,048	6,965	5,883	6,123	6,440	5,011
Year 4	2025	20,352	7,009	5,954	6,216	6,579	5,087
Year 5	2026	20,656	7,053	6,026	6,308	6,718	5,163
Year 6	2027	20,960	7,097	6,097	6,401	6,857	5,239
Year 7	2028	21,264	7,141	6,169	6,494	6,995	5,315
Year 8	2029	21,568	7,185	6,241	6,587	7,134	5,391
Year 9	2030	21,872	7,229	6,312	6,680	7,273	5,467
Year 10	2031	22,176	7,273	6,384	6,772	7,412	5,542
Ten-Year Increase =>		3,040	440	716	928	1,388	760
Projected Revenue =>		$9,159,520	$587,840	$2,745,917	$1,336,723	$1,017,114	$1,204,106
						Projected Revenue =>	**$16,051,000**
						Project City Expenditures =>	**$16,050,000**
						Non-Impact Fee Funding =>	**$0**

POLICE DEVELOPMENT IMPACT FEE ANALYSIS

METHODOLOGY

The Police development fee includes two components: new police station and police vehicles. Two development impact fee methodologies are used— plan-based and incremental expansion. The new police station component is a plan-based approach and the incremental expansion approach is used for police vehicles. Per the Idaho Act, capital improvements are limited to those improvements that have a certain lifespan. As specified in 67-8203(3) of the Idaho Act, "'Capital improvements' means improvements with a useful life of ten (10) years or more, by new construction or other action, which increase the service capacity of a public facility."

The new police station and police vehicles are allocated to both residential and nonresidential development. To calculate nonresidential development impact fees, nonresidential vehicle trips are used as the demand indicator for new police Station and police vehicles. Trip generation rates are highest for commercial developments, such as shopping centers, and lowest for industrial/warehouse development. Office/institutional trip rates fall between the other two categories. This ranking of trip rates is consistent with the relative demand for police from nonresidential development and thus are the best demand indicators. Other possible nonresidential demand indicators, such as employment or floor area, do not accurately reflect the demand for service. If employees per thousand square feet were used as the demand indicator, police development impact fees would be too high for office/institutional development. If floor area were used as the demand indicator, the development impact fees would be too high for industrial development. (See the Appendix for further discussion on trip rates and calculations.)

The residential portion of the fee is derived from the product of persons per housing unit (by type of unit) multiplied by the net capital cost per person. The nonresidential portion is derived from the product of nonresidential vehicle trips per 1,000 square feet of nonresidential space multiplied by the net capital cost per vehicle trip.

Specified in Idaho Code 67-8209(2), local governments must consider historical, available, and alternative sources of funding for system improvements. The City of Idaho Falls recently issued debt to finance the construction of a new police station. The development impact fees have been calculated to fund the growth-related portions of the police station and the attributed future debt service. Thus, a credit is not necessary to offset future revenue from growth for the debt servicing. Furthermore, there are no other dedicated revenues for police facilities that would require a credit in the development impact fee.

COST ALLOCATION FOR POLICE INFRASTRUCTURE

Calls for service were used to allocate police facilities to residential and nonresidential development. The City of Idaho Falls Police Department provided calls for service for the entire City and categorized the calls by land use, residential, nonresidential, and traffic. Traffic calls for service featured the largest share of all service calls and must be attributed to residential and nonresidential activity.

Figure 27. Calls for Service for Police

Land Use	City Calls for Service	% of Total
Residential	11,065	25%
Nonresidential	15,843	35%
Traffic	17,775	40%
Total	44,683	100%

Source: City of Idaho Falls Police Department

Calls for service attributed to the traffic land use were allocated to either residential or nonresidential land uses based on the percentage share of base year vehicle trips for residential and nonresidential land uses. As shown in Figure 28, nonresidential land uses have the greater share of vehicle trips (52 percent), therefore, the nonresidential land use had 52 percent of the 17,775 traffic calls for service allocated to its total calls for service.

Figure 28. Base Year Vehicle Trips - Police

Land Use	Base Year Vehicle Trips	% of Total
Residential	136,271	48%
Nonresidential	150,340	52%
Total	286,612	100%

Source: City of Idaho Falls Police Department

As shown in Figure 29, the cost allocation is 56 percent for nonresidential development (25,176 calls for service of nonresidential demand out of a total 44,683 calls for service). The cost allocation is 44 percent for residential development (19,516 calls for service of residential demand out of a total 44,683 calls for service).

Figure 29. Calls for Service for Police - Allocated

Land Use	City Calls for Service	% of Total
Residential	19,516	44%
Nonresidential	25,167	56%
Total	44,683	100%

Source: City of Idaho Falls Police Department

POLICE LEVEL OF SERVICE AND COST ANALYSIS

The following section details the level of service calculations and capital cost per demand unit for each infrastructure category.

POLICE STATION – PLAN-BASED

As shown in Figure 30, the new police station space totals 61,189 square feet. The station was financed through the Certificate of Participation 2020 series and the overall cost is $36.3 million, or $593 per square foot.

Figure 30. Police Station Cost

Facility	Square Feet	Total COP Series 2020 Payments	Cost per Square Feet
New Police Station	61,189	$36,280,997	$593

Source: City of Idaho Falls Police Department

The floor area is allocated to residential and nonresidential demand based on the calls for service analysis. Calculating growth's share of cost is found by combining residential and nonresidential growth's share of the allocated floor area of the new police station with the 2021 residential and nonresidential demand units (population and nonresidential vehicle trips). As shown in Figure 31, this results in 0.339 square feet per person and 0.179 square feet per nonresidential vehicle trips.

To find the capital cost per person or per nonresidential vehicle trip, the level of service standards are applied to the average cost per square foot. For example, the residential cost per person is $201 (0.339 square feet per person x $593 per square foot = $201 per person, rounded).

Figure 31. Police Station Level of Service and Cost Analysis

Residential Analysis

Residential Share	Residential Floor Area (sq. ft.)	2021 Population	2039 Population	Growth's Share
44%	26,923	63,473	79,485	20%

Residential Growth's Share	Residential Growth's Floor Area (sq. ft.)	Population Increase	Square Feet per Person	Capital Cost per Person
20%	5,424	16,013	0.339	$201

Nonresidential Analysis

Nonresidential Share	Nonresidential Floor Area (sq. ft.)	2021 Vehicle Trips	2039 Vehicle Trips	Growth's Share
56%	34,266	150,340	190,965	21%

Nonresidential Growth's Share	Nonresidential Growth's	Vehicle Trip Increase	Square Feet per Vehicle	Capital Cost per Vehicle
21%	7,289	40,624	0.179	$106

Police Vehicles – Incremental Expansion

As shown in Figure 32, there are 104 law enforcement specific vehicles in the Police fleet. The vehicles are allocated to residential and nonresidential demand based on the calls for service analysis. Of the attributed vehicles, 45.76 units are allocated to residential demand and 58.24 units are allocated to nonresidential demand.

The current level of service is found by dividing the allocated floor area by the 2021 residential and nonresidential demand units (population and nonresidential vehicle trips). Specifically, 0.72 units per 1,000 persons and 0.39 units per 1,000 nonresidential vehicle trips.

To find the capital cost per person or per nonresidential vehicle trip, the level of service standards are applied to the average cost per square foot. For example, the residential cost per person is $46 (0.72 units per 1,000 persons x $55,000 per unit = $40 per person, rounded).

Figure 32. Police Vehicles Level of Service and Cost Allocation

Vehicle Type	Total Units
Mini Van	1
Pickup	6
Sedan	21
SUV	76
Total	**104**

Level-of-Service Standards	**Residential**	**Nonresidential**
Proportionate Share	44%	56%
Share of Vehicle Fleet	45.76	58.24
2021 Population and Nonres Vehicle Trips	63,473	150,340
Vehicles per 1,000 Persons/Vehicle Trips	**0.72**	**0.39**

Cost Analysis	**Residential**	**Nonresidential**
Vehicles per 1,000 Persons/Vehicle Trips	0.72	0.39
Average Cost per Vehicle [1]	$55,000	$55,000
Capital Cost per Person and Vehicle Trip	**$40**	**$21**

[1] Source: City of Idaho Falls Police Department

POLICE CAPITAL IMPROVEMENT NEEDS TO SERVE GROWTH

POLICE VEHICLES

Based on a projected population increase of 8,896 persons over the next 10 years, future residential development demands an additional 6.4 units of Police vehicles (8,896 additional persons x 0.72 units per 1,000 persons). With projected nonresidential trip end growth of 22,305 over the next 10 years, future nonresidential development demands an additional 8.7 units (22,305 additional trips x 0.39 units per 1,000 vehicle trips). As a result, future development demands an additional 15.1 units of Police vehicles at a cost of $830,500 (15.1 units x $55,000 per unit).

Figure 33. Projected Demand for Police Vehicles

Type of Infrastructure	Level of Service			Demand Unit	Cost / Sq. Ft.
Police Vehicles	Residential	0.72	Vehicles	per 1,000 persons	$55,000
	Nonresidential	0.39		per 1,000 trips	

Growth-Related Need for Police Vehicles						
Year		Population	Nonres. Vehicle Trips	Residential Vehicles	Nonresidential Vehicles	Total Vehicles
Base	2021	63,473	150,340	45.7	58.6	104.3
Year 1	2022	64,362	152,571	46.3	59.5	105.8
Year 2	2023	65,252	154,801	46.9	60.3	107.2
Year 3	2024	66,141	157,032	47.6	61.2	108.8
Year 4	2025	67,031	159,263	48.2	62.1	110.3
Year 5	2026	67,921	161,493	48.9	62.9	111.8
Year 6	2027	68,810	163,724	49.5	63.8	113.3
Year 7	2028	69,700	165,954	50.1	64.7	114.8
Year 8	2029	70,589	168,185	50.8	65.5	116.3
Year 9	2030	71,479	170,415	51.4	66.4	117.8
Year 10	2031	72,369	172,646	52.1	67.3	119.4
Ten-Year Increase		8,896	22,305	**6.4**	**8.7**	**15.1**
			Projected Expenditure	**$352,000**	**$478,500**	**$830,500**

Growth-Related Expenditures for Police Vehicles	$830,500

POLICE INPUT VARIABLES AND DEVELOPMENT IMPACT FEES

Figure 34 provides a summary of the input variables used to calculate the net capital cost per person and per nonresidential vehicle trip for police stations and vehicles.

The residential Police impact fees are the product of persons per housing unit by type multiplied by the total net capital cost per person. Fees are provided for single family and multifamily housing type. Each PPHU is multiplied by the net capital cost per person to derive the residential impact fee per housing unit. The nonresidential Police impact fees are the product of trips per 1,000 square feet of nonresidential land use multiplied by the net capital cost per nonresidential vehicle trip. For example, the calculation for a single family unit is: the net capital cost per person ($241) multiplied by the persons per housing unit for that size unit (2.66) to arrive at the impact fee per average single family unit of $641.

Figure 34. Police Maximum Supportable Development Impact Fees

Fee Component	Cost per Person	Cost per Nonres. Vehicle Trips
Police Station	$201	$106
Police Vehicles	$40	$21
Gross Total	$241	$127
Net Total	**$241**	**$127**

Residential

Housing Type	Persons per Housing Unit	Maximum Supportable Fee per Unit
Single Family	2.66	**$641**
Multifamily	1.84	**$443**

Nonresidential

Development Type	Trips per 1,000 Sq. Ft.	Maximum Supportable Fee per 1,000 Sq. Ft.
Retail	14.35	**$1,822**
Office	4.87	**$618**
Industrial	2.48	**$315**
Institutional	5.36	**$681**

CASH FLOW PROJECTIONS FOR POLICE MAXIMUM SUPPORTABLE IMPACT FEE

This section summarizes the potential cash flow to the City of Idaho Falls if the Police development impact fee is implemented at the maximum supportable amounts. The cash flow projections are based on the assumptions detailed in this chapter and the development projections discussed in Appendix B.

At the top of Figure 35, the cost for growth over the next ten years is listed. The summary provides an indication of the impact fee revenue generated by new development. For example, with a ten-year increase of 3,040 single family housing units and a maximum supportable impact fee of $641 per single family housing unit there is a projected revenue of $1,948,640. Shown at the bottom of the figure, the maximum supportable Police impact fee is estimated to cover all growth-related capital costs. With that said, the impact fees are offsetting only the growth-related costs, the cost attributed to the existing demand for the Police Station will be funded from other sources.

Figure 35. Cash Flow Summary for Police Impact Fees

Infrastructure Costs for Police Facilities

	Total Cost	Growth Cost
Police Station	$36,280,997	$4,152,441
Police Vehicles	$830,500	$830,500
Total Expenditures	**$37,111,497**	**$4,982,941**

Projected Development Impact Fee Revenue

		Single Family $641 per unit	Multifamily $443 per unit	Retail $1,822 per KSF	Office $618 per KSF	Industrial $315 per KSF	Institutional $681 per KSF
Year		**Housing Units**	**Housing Units**	**KSF**	**KSF**	**KSF**	**KSF**
Base	2021	19,136	6,833	5,668	5,844	6,024	4,783
Year 1	2022	19,440	6,877	5,739	5,937	6,163	4,859
Year 2	2023	19,744	6,921	5,811	6,030	6,301	4,935
Year 3	2024	20,048	6,965	5,883	6,123	6,440	5,011
Year 4	2025	20,352	7,009	5,954	6,216	6,579	5,087
Year 5	2026	20,656	7,053	6,026	6,308	6,718	5,163
Year 6	2027	20,960	7,097	6,097	6,401	6,857	5,239
Year 7	2028	21,264	7,141	6,169	6,494	6,995	5,315
Year 8	2029	21,568	7,185	6,241	6,587	7,134	5,391
Year 9	2030	21,872	7,229	6,312	6,680	7,273	5,467
Year 10	2031	22,176	7,273	6,384	6,772	7,412	5,542
Ten-Year Increase		3,040	440	716	928	1,388	760
Projected Revenue		$1,948,640	$194,920	$1,304,579	$573,677	$437,095	$517,348
						Projected Revenue =>	**$4,976,000**
						Total Expenditures =>	**$4,983,000**
						Non-Impact Fee Funding =>	**$7,000**

FIRE/EMS DEVELOPMENT IMPACT FEE ANALYSIS

METHODOLOGY

The Fire/EMS Development Impact Fee includes three components: fire station, vehicles and apparatuses, and a training center. TischlerBise recommends an *incremental expansion* approach because current inventory is sufficient to serve current demand. Per the Idaho Act, capital improvements are limited to those improvements that have a certain lifespan. As specified in 67-8203(3) of the Idaho Act, "'Capital improvements' means improvements with a useful life of ten (10) years or more, by new construction or other action, which increase the service capacity of a public facility."

The residential portion of the fee is derived from the product of calls per housing unit (by type of unit) multiplied by the net capital cost per person. The nonresidential portion is derived from the product of nonresidential vehicle trips per 1,000 square feet of nonresidential space multiplied by the net capital cost per vehicle trip.

Specified in Idaho Code 67-8209(2), local governments must consider historical, available, and alternative sources of funding for system improvements. Currently, there are no dedicated revenues being collected by the City to fund growth-related projects for Fire/EMS facilities. Furthermore, the maximum supportable impact fees are constructed to offset all growth-related capital costs for Fire/EMS facilities. Evidence is given in this chapter that the projected capital costs from new development will be entirely offset by the development impact fees. Thus, no general tax dollars are assumed to be used to fund growth-related capital costs, requiring no further revenue credits.

SERVICE AREA

The Idaho Falls Fire Department (IFFD) serves the entirety of the City, as well as areas outside the City. To determine the City's share of IFFD services, TischlerBise has used data on IFFD calls for service broken down by location. The data shows that in 2020, the City of Idaho Falls was responsible for approximately 83 percent of IFFD calls for service. This information will be used to attribute the demand for fire department capital facilities to just the demand from the City of Idaho Falls.

Figure 36. Fire Department Calls for Service

Station No.	2020 Total Calls	Idaho Falls Calls	% of calls to Idaho Falls
1	3,142	2,864	91%
2	1,572	576	37%
3	1,219	1,111	91%
4	4,520	4,175	92%
5	1,200	1,001	83%
	11,653	9,727	83%

Source: City of Idaho Falls Fire Department

COST ALLOCATION FOR FIRE/EMS INFRASTRUCTURE

Calls for service, shown in Figure 37, were used to allocate capital costs to residential and nonresidential development. The IFFD provided calls for service for the City and categorized the calls by housing type, development type, and traffic. Overall, there were 9,727 calls and the single family housing type was responsible for the largest share.

Figure 37. Calls for Service for Fire/EMS

Housing Type	Fire/EMS Calls
Single Family	3,594
Multifamily	1,087
Subtotal	4,681

Development Type	Fire/EMS Calls
Retail	768
Office	80
Industrial	39
Institutional	3,138
Subtotal	4,025
Traffic	1,021
Grand Total	9,727

Calls for service attributed to traffic were allocated to the different housing and development types shown in Figure 37 based on the percentage share of base year vehicle trips of residential and nonresidential land uses. As shown in Figure 38, the single family housing type features the greater share of vehicle trips (41 percent).

Figure 38. Base Year Vehicle Trips

Housing Type	Vehicle Trips	% of Total
Single Family	117,645	41%
Multifamily	18,626	6%
Subtotal	136,271	48%

Development Type	Vehicle Trips	% of Total
Retail	81,304	28%
Office	28,461	10%
Industrial	14,939	5%
Institutional	25,636	9%
Subtotal	150,340	52%
Grand Total	286,612	

The traffic calls are added to each land use based on its share of vehicles trips. For example, with 41 percent of the 1,021 traffic calls for service allocated to its total calls for service, the single family housing type's new calls for service for fire/EMS totals 4,013. As further shown in Figure 39, all 1,021 traffic calls for service are distributed between the other housing and development types, based upon their share of projected base year vehicle trips.

Figure 39. Calls for Service for Fire/EMS – Allocated

Housing Type	Fire/EMS Calls	% of Total
Single Family	4,013	41%
Multifamily	1,153	12%
Subtotal	5,166	53%

Development Type	Fire/EMS Calls	% of Total
Retail	1,058	11%
Office	181	2%
Industrial	92	1%
Institutional	3,229	33%
Subtotal	4,561	47%
Grand Total	9,727	100%

Specific demand from housing and development type is found by comparing call totals to the existing housing units or nonresidential floor area. For example, the demand factor from single family housing is 0.210 (4,013 fire/EMS calls for service / 19,126 base year housing units = 0.210 calls per housing unit, rounded).

Figure 40. Fire/EMS Demand Factors

Housing Type	Fire/EMS Calls	Housing Units	Call per Housing Unit
Single Family	4,013	19,136	0.210
Multifamily	1,153	6,833	0.169

Development Type	Fire/EMS Calls	1,000 Sq. Ft.	Call per 1,000 Sq. Ft.
Retail	1,058	5,668	0.187
Office	181	5,844	0.031
Industrial	92	6,024	0.015
Institutional	3,229	4,783	0.675

FIRE/EMS LEVEL OF SERVICE AND COST ANALYSIS

The following section details the level of service calculations and capital cost per person for each infrastructure category.

FIRE/EMS STATION FACILITIES – INCREMENTAL EXPANSION

As shown in Figure 41, fire/EMS station space includes five stations with a total of 49,942 square feet. The floor area of each station is attributed to City demand based on the City's call demand.

The current level of service is found by dividing the share of floor area by the 2020 total fire/EMS calls for service from the City of Idaho Falls. This results in 4.28 square feet of fire station per fire/EMS call.

According to IFFD, a typical future two bay fire station is approximately 8,000 square feet and the cost of construction is approximately $2,880,000. With an additional 20% added to cost for architectural and electrical services, the total cost would be $3,456,000, resulting in a cost per square foot of $432. Based upon the fire station square footage allocated to the City of Idaho Falls, 41,611 square feet, the estimated future cost of the current fire station inventory is $17, 976,071. To find the capital cost per fire/EMS call, the square feet per fire/EMS call is combined with the average cost per square foot. As shown in Figure 41, the capital cost per fire/EMS call is $1,849 (4.28 square feet per fire/EMS call x $432 per square foot = $1,849 per call, rounded).

Figure 41. Fire/EMS Station Facilities Level of Service and Cost Allocation

Facility	Total Square Feet [1]	% of Calls to Idaho Falls [1]	Idaho Falls Square Feet	Cost per Square Foot [2]	City of Idaho Falls Replacement Cost
Station 1	19,286	91%	17,580	$432	$7,594,387
Station 2	6,744	37%	2,471	$432	$1,067,508
Station 3	9,751	91%	8,887	$432	$3,839,222
Station 4	9,618	92%	8,884	$432	$3,837,837
Station 5	4,543	83%	3,790	$432	$1,637,115
Total	**49,942**		**41,611**		**$17,976,071**

Level-of-Service Standards	**Idaho Falls**
Share of Floor Area (sq. ft.)	41,611
2020 Total Idaho Falls Fire/EMS Calls	9,727
Square Feet per Fire/EMS Call	**4.28**

Cost Analysis	**Total**
Square Feet per Fire/EMS Call	4.28
Average Cost per Square Foot [2]	$432
Capital Cost per Fire/EMS Call	**$1,849**

[1] Source: Idaho Falls Fire Department
[2] Estimated current cost of a prototypical fire station the City will build in the future

Fire/EMS Vehicles and Apparatus – Incremental Expansion

As shown in Figure 42, there is a total of 36 vehicles in the Fire/EMS Department. The vehicles are attributed to City demand based on the specific call volume at each station. As a result, there are 18.26 units attributed to the City. The current level of service is found by dividing the share of the vehicle fleet by the 2020 total fire/EMS calls for service from the City of Idaho Falls. Specifically, 1.88 vehicles per 1,000 fire/EMS call.

Based on the replacement cost of the current inventory ($5,765,267), the average cost per unit of vehicles and apparatus is $316,000. To find the capital cost per fire/EMS call, the vehicles per 1,000 fire/EMS call is combined with the average cost per unit. As shown in Figure 42, the capital cost per fire/EMS call is $594 (1.88 vehicles per 1,000 fire/EMS call x $316,000 per unit = $594 per call, rounded).

Figure 42. Fire/EMS Vehicles and Apparatus Level of Service and Cost Allocation

Vehicle Type	Total Units [1]	Idaho Falls Units	Cost per Vehicle [1]	City of Idaho Falls Replacement Cost
Ladder Truck	2	1.82	$1,000,000	$1,823,043
Engine	5	2.67	$545,000	$1,454,737
Rescue	2	1.84	$300,000	$550,558
Squad Vehicle	14	3.04	$52,000	$157,854
Ambulance	13	8.90	$200,000	$1,779,076
Total	**36**	**18.26**		**$5,765,267**

Level-of-Service Standards	Idaho Falls
Share of Vehicle Fleet	18.26
2020 Total Idaho Falls Fire/EMS Calls	9,727
Vehicles per 1,000 Fire/EMS Call	**1.88**

Cost Analysis	Total
Vehicles per Fire/EMS Call	1.88
Average Cost per Unit	$316,000
Capital Cost per Fire/EMS Call	**$594**

[1] Source: Idaho Falls Fire Department

Fire/EMS Training Center – Incremental Expansion

As shown in Figure 43, the City's fire/EMS training center has a total square footage of 113,256. As discussed previously, the City of Idaho Falls is responsible for 83% of IFFD services, which is approximately 94,537 square feet.

The current level of service is found by dividing the share of floor area by the 2020 total fire/EMS calls for service from the City of Idaho Falls. This results in 9.72 square feet of fire station per fire/EMS call.

Based on the replacement cost of the training center ($283,805), the average cost per square foot is $3. To find the capital cost per fire/EMS call, the square feet per fire/EMS call is combined with the average cost per square foot. As shown in Figure 43, the capital cost per fire/EMS call is $29 (9.72 square feet per fire/EMS call x $3 per square foot = $29 per call, rounded).

Figure 43. Fire/EMS Training Center Level of Service and Cost Allocation

Facility	Total Square Feet [1]	Idaho Falls Square Feet	Total Replacement Value [1]	City of Idaho Falls Replacement Value
Training Center	113,256	94,537	$340,000	$283,805
Total	**113,256**	**94,537**		**$283,805**

Level-of-Service Standards	**Idaho Falls**
Share of Floor Area (sq. ft.)	94,537
2020 Total Idaho Falls Fire/EMS Calls	9,727
Square Feet per Fire/EMS Call	**9.72**

Cost Analysis	**Total**
Square Feet per Fire/EMS Call	9.72
Average Cost per Square Foot	$3
Capital Cost per Fire/EMS Call	**$29**

[1] Source: Boam & Associates Real Estate Appraisal, May, 2021

FIRE/EMS CAPITAL IMPROVEMENT NEEDS TO SERVE GROWTH

FIRE/EMS STATION FACILITIES

Based on a projected call for service increase of 1,409 persons over the next 10 years, future development in Idaho Falls demands an additional 6,031 square feet of fire/EMS station space (1,409 additional calls for service x 4.28 square feet per call for service). As a result, future growth cost for fire/EMS stations is $2,605,249 (6,031 square feet x $432 per square foot).

Figure 44. Projected Demand for Fire Station Facilities

Infrastructure	Level of Service		Demand Unit	Unit Cost
Fire & EMS Stations	4.28	Square Feet	per Calls for Service	$432

Growth-Related Need for Fire & EMS Stations			
Year		Calls for Service	Total Square Feet
Base	2021	9,727	41,632
Year 1	2022	9,868	42,235
Year 2	2023	10,009	42,838
Year 3	2024	10,150	43,441
Year 4	2025	10,291	44,044
Year 5	2026	10,432	44,647
Year 6	2027	10,572	45,250
Year 7	2028	10,713	45,853
Year 8	2029	10,854	46,456
Year 9	2030	10,995	47,059
Year 10	2031	11,136	47,662
Ten-Year Increase		1,409	**6,031**
Projected Expenditure			**$2,605,249**

Growth-Related Expenditures for Fire & EMS Stations	$2,605,249

FIRE/EMS VEHICLES AND APPARATUS

Based on a projected call for service increase of 1,409 persons over the next 10 years, future residential development demands an additional 2.6 units of fire vehicles and apparatus (1,409 additional persons x 1.88 units per 1,000 calls for service / 1,000). As a result, future growth cost for fire/EMS vehicles and apparatus is $837,080 (2.6 units x $316,000 per unit).

Figure 45. Projected Demand for Fire/EMS Vehicles and Apparatus

Infrastructure	Level of Service		Demand Unit	Unit Cost
Fire & EMS Vehicles	1.88	Vehicles	per 1,000 Calls for Service	$316,000

Growth-Related Need for Fire & EMS Vehicles			
Year		Calls for Service	Total Vehicles
Base	2021	9,727	18.3
Year 1	2022	9,868	18.6
Year 2	2023	10,009	18.8
Year 3	2024	10,150	19.1
Year 4	2025	10,291	19.3
Year 5	2026	10,432	19.6
Year 6	2027	10,572	19.9
Year 7	2028	10,713	20.1
Year 8	2029	10,854	20.4
Year 9	2030	10,995	20.7
Year 10	2031	11,136	20.9
Ten-Year Increase		1,409	**2.6**
Projected Expenditure			**$837,080**

Growth-Related Expenditures for Fire & EMS Vehicles	$837,080

FIRE/EMS TRAINING CENTER

Based on a projected call for service increase of 1,409 persons over the next 10 years, future development in Idaho Falls demands an additional 13,696 square feet of fire/EMS training center space (1,409 additional calls for service x 9.72 square feet per call for service). As a result, future growth cost for fire/EMS station space is $41,087 (6,031 square feet x $3 per square foot).

Figure 46. Projected Demand for Fire/EMS Training Center

Infrastructure	Level of Service		Demand Unit	Unit Cost
Fire & EMS Training	9.72	Square Feet	per Calls for Service	$3

Growth-			
Year		Calls for Service	Total Square Feet
Base	2021	9,727	94,546
Year 1	2022	9,868	95,916
Year 2	2023	10,009	97,286
Year 3	2024	10,150	98,655
Year 4	2025	10,291	100,025
Year 5	2026	10,432	101,394
Year 6	2027	10,572	102,764
Year 7	2028	10,713	104,134
Year 8	2029	10,854	105,503
Year 9	2030	10,995	106,873
Year 10	2031	11,136	108,242
Ten-Year Increase		1,409	**13,696**
Projected Expenditure			**$41,087**

Growth-Related Expenditures for Fire & EMS Training	$41,087

FIRE INPUT VARIABLES AND DEVELOPMENT IMPACT FEES

Figure 47 provides a summary of the input variables used to calculate the net capital cost per housing unit and per 1,000 square feet of nonresidential floor area of fire station facilities, vehicles and apparatus, and training center space.

The residential Fire impact fees are the product of calls per housing unit by type multiplied by the total net capital cost per call for service. Fees are provided for both single family and multifamily housing types. Each call for service per housing unit is multiplied by the net capital cost per call to derive the residential impact fee per housing unit. The nonresidential Fire impact fees are the product of calls for service per 1,000 square feet of nonresidential land use multiplied by the net capital cost per call. An example of the calculation for an average single family unit is: the net capital cost per call ($2,472) multiplied by the calls per housing unit (0.210) to arrive at the impact fee per single family unit of $519.

Figure 47. Fire/EMS Input Variables and Maximum Supportable Impact Fees

Fee Component	Cost per Fire/EMS Call
Fire/EMS Stations	$1,849
Fire/EMS Vehicles and Apparatuses	$594
Fire/EMS Training Cener	$29
Gross Total	$2,472
Net Total	**$2,472**

Residential

Housing Type	Fire/EMS Calls per Housing Unit	Maximum Supportable Fee per Unit
Single Family	0.210	**$519**
Multifamily	0.169	**$418**

Nonresidential

Development Type	Fire/EMS Calls per 1,000 Sq Ft	Maximum Supportable Fee per 1,000 Sq Ft
Retail	0.187	**$462**
Office	0.031	**$77**
Industrial	0.015	**$37**
Institutional	0.675	**$1,669**

CASH FLOW PROJECTIONS FOR FIRE/EMS MAXIMUM SUPPORTABLE IMPACT FEE

This section summarizes the potential cash flow to the City of Idaho Falls if the Fire development impact fee is implemented at the maximum supportable amounts. The cash flow projections are based on the assumptions detailed in this chapter and the development projections discussed in Appendix B.

At the top of Figure 48, the cost for growth over the next ten years is listed. The summary provides an indication of the impact fee revenue generated by new development. For example, with a ten-year increase of 3,040 single family housing units and a maximum supportable impact fee of $519 per single family housing unit there is a projected revenue of $1,577,760. Shown at the bottom of the figure, the maximum supportable Fire impact fee is estimated to cover all growth-related capital costs.

Figure 48. Cash Flow Summary for Fire Development Impact Fees

Infrastructure Costs for Fire Facilities

	Total Cost	Growth Cost
Fire/EMS Stations	$2,605,249	$2,605,249
Fire/EMS Vehicles and Apparatuses	$837,080	$837,080
Fire/EMS Training Cener	$41,087	$41,087
Total Expenditures	**$3,483,416**	**$3,483,416**

Projected Development Impact Fee Revenue

		Single Family $519 per unit	Multifamily $418 per unit	Retail $462 per KSF	Office $77 per KSF	Industrial $37 per KSF	Institutional $1,669 per KSF
Year		**Housing Units**	**Housing Units**	**KSF**	**KSF**	**KSF**	**KSF**
Base	2021	19,136	6,833	5,668	5,844	6,024	4,783
Year 1	2022	19,440	6,877	5,739	5,937	6,163	4,859
Year 2	2023	19,744	6,921	5,811	6,030	6,301	4,935
Year 3	2024	20,048	6,965	5,883	6,123	6,440	5,011
Year 4	2025	20,352	7,009	5,954	6,216	6,579	5,087
Year 5	2026	20,656	7,053	6,026	6,308	6,718	5,163
Year 6	2027	20,960	7,097	6,097	6,401	6,857	5,239
Year 7	2028	21,264	7,141	6,169	6,494	6,995	5,315
Year 8	2029	21,568	7,185	6,241	6,587	7,134	5,391
Year 9	2030	21,872	7,229	6,312	6,680	7,273	5,467
Year 10	2031	22,176	7,273	6,384	6,772	7,412	5,542
Ten-Year Increase		3,040	440	716	928	1,388	760
Projected Revenue =>		$1,577,760	$183,920	$330,799	$71,478	$51,341	$1,267,920
						Projected Revenue =>	**$3,483,000**
						Total Expenditures =>	**$3,483,000**
						Non-Impact Fee Funding =>	**$0**

PROPORTIONATE SHARE ANALYSIS

Development impact fees for the City of Idaho Falls are based on reasonable and fair formulas or methods. The fees do not exceed a proportionate share of the costs incurred or to be incurred by the City in the provision of system improvements to serve new development. The City will fund non-growth-related improvements with non-development impact fee funds as it has in the past. Specified in the Idaho Development Impact Fee Act (Idaho Code 67-8207), several factors must be evaluated in the development impact fee study and are discussed below.

1) The development impact fees for the City of Idaho Falls are based on new growth's share of the costs of previously built projects along with planned public facilities as provided by the City of Idaho Falls. Projects are included in the City's capital improvements plan and will be included in annual capital budgets.
2) TischlerBise estimated development impact fee revenue based on the maximum supportable development impact fees for the one, citywide service area; results are shown in the cash flow analyses in this report. Development impact fee revenue will entirely fund growth-related improvements.
3) TischlerBise has evaluated the extent to which new development may contribute to the cost of public facilities. The development impact fees will replace the current dedicated revenues for applicable public facilities. Also, the report has shown that all applicable growth-related public facility costs will be entirely funded by impact fees, thus no credit is necessary for general tax dollar funding.
4) The relative extent to which properties will make future contributions to the cost of existing public facilities has also been evaluated in regards to existing debt. Outstanding debt for growth's portion of already constructed facilities will be paid from development impact fee revenue, therefore a future revenue credit is not necessary.
5) The City will evaluate the extent to which newly developed properties are entitled to a credit for system improvements that have been provided by property owners or developers. These "site-specific" credits will be available for system improvements identified in the annual capital budget and long-term Capital Improvements Plans. Administrative procedures for site-specific credits should be addressed in the development impact fee ordinance.
6) Extraordinary costs, if any, in servicing newly developed properties should be addressed through administrative procedures that allow independent studies to be submitted to the City. These procedures should be addressed in the development impact fee ordinance. One service area represented by the City of Idaho Falls is appropriate for the fees herein.
7) The time-price differential inherent in fair comparisons of amounts paid at different times has been addressed. All costs in the development impact fee calculations are given in current dollars with no assumed inflation rate over time. Necessary cost adjustments can be made as part of the annual evaluation and update of development impact fees.

IMPLEMENTATION AND ADMINISTRATION

The Idaho Development Impact Fee Act (hereafter referred to as the Idaho Act) requires jurisdictions to form a Development Impact Fee Advisory Committee. The committee must have at least five members with a minimum of two members active in the business of real estate, building, or development. The committee acts in an advisory capacity and is tasked to do the following:

- Assist the governmental entity in adopting land use assumptions;
- Review the capital improvements plan, and proposed amendments, and file written comments;
- Monitor and evaluate implementation of the capital improvements plan;
- File periodic reports, at least annually, with respect to the capital improvements plan and report to the governmental entity any perceived inequities in implementing the plan or imposing the development impact fees; and
- Advise the governmental entity of the need to update or revise land use assumptions, the capital improvements plan, and development impact fees.

Per the above, the City formed a Development Impact Fee Advisory Committee (DIFAC). TischlerBise and City Staff met with the DIFAC during the process and provided information on land use assumptions, level of service and cost assumptions, and draft development impact fee schedules. This report reflects comments and feedback received from the DIFAC.

The City must develop and adopt a capital improvements plan (CIP) that includes those improvements for which fees were developed. The Idaho Act defines a capital improvement as an "improvement with a useful life of ten years or more, by new construction or other action, which increases the service capacity of a public facility." Requirements for the CIP are outlined in Idaho Code 67-8208. Certain procedural requirements must be followed for adoption of the CIP and the development impact fee ordinance. Requirements are described in detail in Idaho Code 67-8206. The City has a CIP that meets the above requirements.

TischlerBise recommends that development impact fees be updated annually to reflect recent data. One approach is to adjust for inflation in construction costs by means of an index like the RSMeans or Engineering News Record (ENR). This index can be applied against the calculated development impact fee. If cost estimates change significantly the City should evaluate an adjustment to the CIP and development impact fees.

Idaho's enabling legislation requires an annual development impact fees report that accounts for fees collected and spent during the preceding year (Idaho Code 67-8210). Development impact fees must be deposited in interest-bearing accounts earmarked for the associated capital facilities as outlined in capital improvements plans. Also, fees must be spent within eight years of when they are collected (on a first in, first out basis) unless the local governmental entity identifies in writing (a) a reasonable cause why the

fees should be held longer than eight years; and (b) an anticipated date by which the fees will be expended but in no event greater than eleven years from the date they were collected.

Credits must be provided for in accordance with Idaho Code Section 67-8209 regarding site-specific credits or developer reimbursements for system improvements that have been included in the development impact fee calculations. Project improvements normally required as part of the development approval process are not eligible for credits against development impact fees. Specific policies and procedures related to site-specific credits or developer reimbursements for system improvements should be addressed in the ordinance that establishes the City's fees.

The general concept is that developers may be eligible for site-specific credits or reimbursements only if they provide system improvements that have been included in CIP and development impact fee calculations. If a developer constructs a system improvement that was included in the fee calculations, it is necessary to either reimburse the developer or provide a credit against the fees in the area that benefits from the system improvement. The latter option is more difficult to administer because it creates unique fees for specific geographic areas. Based on TischlerBise's experience, it is better for a reimbursement agreement to be established with the developer that constructs a system improvement. For example, if a developer elects to construct a system improvement, then a reimbursement agreement can be established to payback the developer from future development impact fee revenue. The reimbursement agreement should be based on the actual documented cost of the system improvement, if less than the amount shown in the CIP. However, the reimbursement should not exceed the CIP amount that has been used in the development impact fee calculations.

APPENDIX A. LAND USE DEFINITIONS

RESIDENTIAL DEVELOPMENT

As discussed below, residential development categories are based on data from the U.S. Census Bureau, American Community Survey. The City of Idaho Falls will collect impact fees from all new residential units. One-time impact fees are determined by site capacity (i.e., number of residential units).

Single Family Units:

1. Single family detached is a one-unit structure detached from any other house, that is, with open space on all four sides. Such structures are considered detached even if they have an adjoining shed or garage. A one-family house that contains a business is considered detached as long as the building has open space on all four sides.
2. Single family attached (townhouse) is a one-unit structure that has one or more walls extending from ground to roof separating it from adjoining structures. In row houses (sometimes called townhouses), double houses, or houses attached to nonresidential structures, each house is a separate, attached structure if the dividing or common wall goes from ground to roof.
3. Mobile home includes both occupied and vacant mobile homes, to which no permanent rooms have been added. Mobile homes used only for business purposes or for extra sleeping space and mobile homes for sale on a dealer's lot, at the factory, or in storage are not counted in the housing inventory.

Multifamily Units:

1. 2+ units (duplexes and apartments) are units in structures containing two or more housing units, further categorized as units in structures with "2, 3 or 4, 5 to 9, 10 to 19, 20 to 49, and 50 or more apartments."
2. Boat, RV, Van, etc. includes any living quarters occupied as a housing unit that does not fit the other categories (e.g., houseboats, railroad cars, campers, and vans). Recreational vehicles, boats, vans, railroad cars, and the like are included only if they are occupied as a current place of residence.

NONRESIDENTIAL DEVELOPMENT CATEGORIES

Nonresidential development categories used throughout this study are based on land use classifications from the book *Trip Generation* (ITE, 2017). A summary description of each development category is provided below.

Retail: Establishments primarily selling merchandise, eating/drinking places, and entertainment uses. By way of example, *Retail* includes shopping centers, supermarkets, pharmacies, restaurants, bars, nightclubs, automobile dealerships, movie theaters, and lodging (hotel/motel).

Office: Establishments providing management, administrative, professional, or business services. By way of example, *Office* includes banks, business offices, medical offices, and veterinarian clinics.

Industrial: Establishments primarily engaged in the production and transportation of goods. By way of example, *Industrial* includes manufacturing plants, trucking companies, warehousing facilities, utility substations, power generation facilities, and telecommunications buildings.

Institutional: Public and quasi-public buildings providing educational, social assistance, or religious services. By way of example, *Institutional* includes schools, universities, churches, daycare facilities, hospitals, health care facilities, and government buildings.

APPENDIX B. DEMOGRAPHIC ASSUMPTIONS

POPULATION AND HOUSING CHARACTERISTICS

Impact fees often use per capita standards and persons per housing unit or persons per household to derive proportionate share fee amounts. Housing types have varying household sizes and, consequently, a varying demand on City infrastructure and services. Thus, it is important to differentiate between housing types and size.

When persons per housing unit (PPHU) is used in the development impact fee calculations, infrastructure standards are derived using year-round population. In contrast, when persons per household (PPHH) is used in the development impact fee calculations, the fee methodology assumes all housing units will be occupied, thus requiring seasonal or peak population to be used when deriving infrastructure standards. Thus, TischlerBise recommends that fees for residential development in Idaho Falls be imposed according to persons per housing unit.

Based on housing characteristics, TischlerBise recommends using two housing unit categories for the Impact Fee study: (1) Single Family and (2) Multifamily. Each housing type has different characteristics which results in a different demand on City facilities and services. Figure 49 shows the US Census American Community Survey 2019 5-Year Estimates data for the City of Idaho Falls. Single family units have a household size of 2.66 persons and multifamily units have a household size of 1.84 persons.

The estimates in Figure 49 are for household size calculations. Base year population and housing units are estimated with another, more recent data source.

Figure 49. Persons per Housing Unit

Housing Type	Persons	Housing Units	Persons per Housing Unit	Households	Persons per Household	Housing Unit Mix
Single Family [1]	48,851	18,381	**2.66**	17,324	2.82	75%
Multifamily [2]	11,410	6,212	**1.84**	5,541	2.06	25%
Total	60,261	24,593	**2.45**	22,865	2.64	

[1] Includes attached and detached single family homes and mobile homes
[2] Includes structures with 2+ units
Source: U.S. Census Bureau, 2019 American Community Survey 5-Year Estimates

RESIDENTIAL BUILDING PERMITS

The City of Idaho Falls provided residential building permit data for single family and multifamily housing units within City limits over the previous five years, from 2016 to 2020. Attached housing is considered single family housing in the residential building permit data. Approximately 87 percent of the total number of building permits issued over this five-year period were issued to single family units. Building permit data is used for residential development population and housing unit projections as shown in Figure 50.

Overall, there is has been an average annual growth of 349 housing units. Additionally, there has been a steady increase from 2016 to 2018. Despite a large decrease in issued permits in 2019 and the onset of the COVID-19 pandemic, 2020 saw a significant uptick in and largest total number of issued permits.

Figure 50. Residential Building Permits Issued

Housing Type	2016	2017	2018	2019	2020	Total	Average
Single Family [1]	278	283	327	273	360	1,521	**304**
Multifamily	0	0	96	0	126	222	**44**
Total	278	283	423	273	486	1,743	**349**

Source: City of Idaho Falls
[1] Single Family building permits include attached housing units

BASE YEAR POPULATION AND HOUSING UNITS

The Bonneville Metropolitan Planning Organization (BMPO) provides current household and household projections at the traffic analysis area (TAZ) level for the Bonneville County region of Idaho. An analysis of the TAZs resulted in a number of TAZs being partially included in the City of Idaho Falls boundary. To not overestimate population, the average between the TAZs only wholly in Idaho Falls and those plus the TAZs partially in the City was calculated.

The household estimates from Bonneville County Assessor's Office provides are of occupied homes. However, the Impact Fee study requires housing units (occupied and vacant housing units). The vacancy rates for single family units (6.1 percent) and multifamily (12.1 percent) are applied to estimate vacant homes and then added to the occupied estimate to find totals. Overall, 25,968 housing units are estimated, the majority being in single family housing.

The base year population was calculated applying persons per housing unit factors to housing estimates. From this calculation there is an estimated household population of 63,473.

Figure 51. Base Year Population and Housing Units

City of Idaho Falls	Base Year 2021
Population [1]	63,473
Housing Units [2]	
Single Family	19,136
Multifamily	6,833
Total Housing Units	25,968

[1] Source: U.S. Census Bureau, 2019 American Community Survey 5-Year Estimates

[2] Source: Bonneville County Assessor's Office

POPULATION AND HOUSING UNIT PROJECTIONS

Recent growth in Idaho Falls is assumed to continue so, the five-year average of building permits is assumed to continue through the 10-year projection period. Population growth is based on persons per housing unit factors and housing development.

Estimates based upon the building permit data show a growth rate of over 1 percent annually, 14.0 percent over the next ten years, as shown in Figure 52. Resulting in an increase of 8,896 residents and a housing unit increase of 3,480. Single family development accounts for approximately 87 percent of the total housing growth.

Figure 52. Residential Development Projections

City of Idaho Falls, ID	Base Year 2021	2022	2023	2024	2025	2026	2027	2028	2029	2030	2031	Total Increase
Population [1]	63,473	64,362	65,252	66,141	67,031	67,921	68,810	69,700	70,589	71,479	72,369	**8,896**
Percent Increase		*1.4%*	*1.4%*	*1.4%*	*1.3%*	*1.3%*	*1.3%*	*1.3%*	*1.3%*	*1.3%*	*1.2%*	*14.0%*
Housing Units [2]												
Single Family	19,136	19,440	19,744	20,048	20,352	20,656	20,960	21,264	21,568	21,872	22,176	**3,040**
Multifamily	6,833	6,877	6,921	6,965	7,009	7,053	7,097	7,141	7,185	7,229	7,273	**440**
Total Housing Units	25,968	26,316	26,664	27,012	27,360	27,708	28,056	28,404	28,752	29,100	29,448	**3,480**

[1] Population growth is based on housing development and persons per housing unit factors
[2] Five-year average of building permits is assumed to continue over the next ten years

CURRENT EMPLOYMENT AND NONRESIDENTIAL FLOOR AREA

The impact fee study will include nonresidential development as well. Based on the Bonneville Metropolitan Planning Organization's TAZ database, 53,960 jobs are estimated in the City of Idaho Falls (Figure 53). The model forecasts employment growth for the entire City from 2020 to 2050 in five-year increments. To find the total employment in the base year, 2021, a straight-line approach from 2020 to 2025 was used.

Industry employment totals were determined using the United States Census Bureau's OnTheMap resource, conjointly with partial industry employment figures provided by the Bonneville Metropolitan Planning Organization. OnTheMap provides employment breakdowns by industry for the City of Idaho Falls, most recently in the year 2018. By applying the industry specific employment breakdowns from 2018 to the total and employment estimates provided by the Bonneville Metropolitan Planning Organization TAZ, we are able to provide complete employment estimates by industry. As can be seen in Figure 53, nearly to one-third of employment is in the Office industry, with the Industrial industry featuring the lowest percentage share.

Figure 53. Base Year Employment by Industry

Employment Industries	Base Year 2021	Percent of Total
Retail [1]	13,281	25%
Office [2]	17,354	32%
Industrial [1]	9,796	18%
Institutional [2]	13,528	25%
Total [1]	53,960	100%

[1] Source: Bonneville Metropolitan Planning Organization

[2] United States Census Bureau OnTheMap Idaho Falls Work Area Profile Analysis

The base year nonresidential floor area for the industry sectors is calculated with the Institution of Transportation Engineers' (ITE) square feet per employee averages, Figure 54. For Industrial the Light Industrial factors are used; for Institutional the Hospital factors are used; for Retail the Shopping Center factors are used; for Office the General Office factors are used.

Figure 54. Institute of Transportation Engineers (ITE) Employment Density Factors

ITE Code	Land Use	Demand Unit	Wkdy Trip Ends Per Dmd Unit	Wkdy Trip Ends Per Employee	Emp Per Dmd Unit	Sq Ft Per Emp
110	Light Industrial	1,000 Sq Ft	4.96	3.05	1.63	615
130	Industrial Park	1,000 Sq Ft	3.37	2.91	1.16	864
140	Manufacturing	1,000 Sq Ft	3.93	2.47	1.59	628
150	Warehousing	1,000 Sq Ft	1.74	5.05	0.34	2,902
254	Assisted Living	bed	2.60	4.24	0.61	na
520	Elementary School	1,000 Sq Ft	19.52	21.00	0.93	1,076
610	Hospital	1,000 Sq Ft	10.72	3.79	2.83	354
710	General Office (avg size)	1,000 Sq Ft	9.74	3.28	2.97	337
714	Corporate Headquarters	1,000 Sq Ft	7.95	2.31	3.44	291
760	Research & Dev Center	1,000 Sq Ft	11.26	3.29	3.42	292
770	Business Park	1,000 Sq Ft	12.44	4.04	3.08	325
820	Shopping Center (avg size)	1,000 Sq Ft	37.75	16.11	2.34	427

Source: Trip Generation, Institute of Transportation Engineers, 10th Edition (2017)

By combining the base year job totals and the ITE square feet per employee factors, the nonresidential floor area is calculated in Figure 55. There is an estimated total of 22.3 million square feet of nonresidential floor area in Idaho Falls. The Industrial industry accounts for the highest amount of the total nonresidential floor area in Idaho Falls, with approximately 27 percent. Office accounts for 26 percent, Retail accounts for 25 percent, and Institutional accounts for 21 percent of the total.

Figure 55. Base Year Nonresidential Floor Area

Employment Industries	Base Year Jobs [1]	Sq. Ft. per job [2]	Base Year Floor Area (sq. ft.)
Retail	13,281	427	5,667,759
Office	17,354	337	5,844,205
Industrial	9,796	615	6,023,942
Institutional	13,528	354	4,782,798
Total	53,960		22,318,704

[1] Source: Bonneville Metropolitan Planning Organization; American Census Bureau OnTheMap

[2] Source: Trip Generation, Institute of Transportation Engineers, 10th Edition (2017)

NONRESIDENTIAL FLOOR AREA PROJECTIONS

Based on the Bonneville MPO TAZ employment database, over the ten-year projection period, it is estimated that there will be an increase of 8,840 jobs. The majority of the increase comes from the Office industry (31%); however, the Industrial (26%) and Institutional industries (24%) have significant impacts as well.

The nonresidential floor area projections are calculated by applying the ITE square feet per employee factors to the job growth. In the next ten years, the nonresidential floor area is projected to increase by 3.8 million square feet, a 17 percent increase from the base year. The Industrial and Office sectors have the greatest increase.

Figure 56. Employment Floor Area and Employment Projections

Industry	Base Year 2021	2022	2023	2024	2025	2026	2027	2028	2029	2030	2031	Total Increase
Jobs [1]												
Retail	13,281	13,449	13,617	13,784	13,952	14,120	14,288	14,456	14,623	14,791	14,959	**1,678**
Office	17,354	17,630	17,906	18,181	18,457	18,733	19,008	19,284	19,560	19,835	20,111	**2,757**
Industrial	9,796	10,022	10,248	10,473	10,699	10,925	11,150	11,376	11,602	11,827	12,053	**2,257**
Institutional	13,528	13,743	13,958	14,173	14,388	14,603	14,817	15,032	15,247	15,462	15,677	**2,149**
Total	53,960	54,844	55,728	56,612	57,496	58,380	59,264	60,148	61,032	61,916	62,800	**8,840**
Nonresidential Floor Area (1,000 sq. ft.) [2]												
Retail	5,668	5,739	5,811	5,883	5,954	6,026	6,097	6,169	6,241	6,312	6,384	**716**
Office	5,844	5,937	6,030	6,123	6,216	6,308	6,401	6,494	6,587	6,680	6,772	**928**
Industrial	6,024	6,163	6,301	6,440	6,579	6,718	6,857	6,995	7,134	7,273	7,412	**1,388**
Institutional	4,783	4,859	4,935	5,011	5,087	5,163	5,239	5,315	5,391	5,467	5,542	**760**
Total	22,319	22,698	23,077	23,456	23,835	24,214	24,594	24,973	25,352	25,731	26,110	**3,792**

[1] Source: Bonneville Metropolitan Planning Organization; American Census Bureau OnTheMap
[2] Source: TischlerBise analysis; Institute of Transportation Engineers, Trip Generation, 2017

FUNCTIONAL POPULATION

Both residential and nonresidential developments increase the demand on City services and facilities. To calculate the proportional share between residential and nonresidential demand on service and facilities, a functional population approach is used. The functional population approach allocates the cost of the facilities to residential and nonresidential development based on the activity of residents and workers in the City through the 24 hours in a day.

Residents that do not work are assigned 20 hours per day to residential development and 4 hours per day to nonresidential development (annualized averages). Residents that work in City of Idaho Falls are assigned 14 hours to residential development and 10 hours to nonresidential development. Residents that work outside the City are assigned 14 hours to residential development, the remaining hours in the day are assumed to be spent outside of the City working. Inflow commuters are assigned 10 hours to nonresidential development. Based on the most recent functional population data (2018), residential development accounts for 65 percent of the functional population, while nonresidential development accounts for 35 percent.

Figure 57. Idaho Falls Functional Population

Idaho Falls, ID (2018)				
Residential			*Demand*	*Person*
Population*	60,147		*Hours/Day*	*Hours*
Residents Not Working		31,798	20	635,960
Employed Residents		28,349		
Employed in Idaho Falls		14,433	14	202,062
Employed outside Idaho Falls		13,916	14	194,824
			Residential Subtotal	1,032,846
			Residential Share =>	**65%**
Nonresidential				
Non-working Residents		31,798	4	127,192
Jobs Located in Idaho Falls		42,656		
Residents Employed in Idaho Falls		28,223	10	282,230
Non-Resident Workers (inflow commuters)		14,433	10	144,330
			Nonresidential Subtotal	553,752
			Nonresidential Share =>	**35%**
			TOTAL	1,586,598

Source: U.S. Census Bureau, OnTheMap 6.1.1 Application and LEHD Origin-Destination Employment Statistics.
* Source: U.S. Census Bureau, American Community Survey, 2018

VEHICLE TRIP GENERATION

RESIDENTIAL VEHICLE TRIPS BY HOUSING TYPE

A customized trip rate is calculated for the single family and multifamily units in Idaho Falls. In Figure 58, the most recent data from the US Census American Community Survey is inputted into equations provided by the ITE to calculate the trip ends per housing unit factor. A single family unit is estimated to generate 10.60 trip ends and a multifamily unit is estimated to generate 4.70 trip ends on an average weekday.

Figure 58. Customized Residential Trip End Rates

Average Weekday Vehicle Trip Ends by Housing Type

		Households (2)			Vehicles per
	Vehicles Available (1)	Single Family*	Multifamily Units	Total HHs	Household by Tenure
Owner-occupied	32,499	14,248	194	14,442	2.25
Renter-occupied	12,084	3,076	5,347	8,423	1.43
TOTAL	**44,583**	**17,324**	**5,541**	**22,865**	**1.95**
Housing Units (6) =>		18,381	6,212	24,593	
Persons per Housing Unit =>		2.66	1.84	2.45	

	Persons (3)	Trip Ends (4)	Vehicles by Type of Housin	Trip Ends (5)	Average Trip Ends	**Trip Ends per Housing Unit**	ITE Trip Ends Per Unit	Difference from ITE
Single Family*	48,851	150,649	36,475	238,440	194,545	**10.60**	9.44	12%
Multifamily	11,410	26,048	8,108	32,238	29,143	**4.70**	5.44	-14%
TOTAL	**60,261**	**176,697**	**44,583**	**270,677**	**223,687**	**9.80**		

** Includes Single Family Detached, Attached, and Manufactured Homes*

(1) Vehicles available by tenure from Table B25046, 2015-2019 American Community Survey 5-Year Estimates.
(2) Households by tenure and units in structure from Table B25032, American Community Survey, 2015-2019.
(3) Persons by units in structure from Table B25033, American Community Survey, 2015-2019.
(4) Vehicle trips ends based on persons using formulas from Trip Generation (ITE 2017). For single family housing (ITE 210), the fitted curve equation is EXP(0.96*LN(persons)+1.43). To approximate the average population of the ITE studies, persons were divided by 221 and the equation result multiplied by 221. For multifamily housing (ITE 221), the fitted curve equation is (2.29*persons)-81.02.
(5) Vehicle trip ends based on vehicles available using formulas from Trip Generation (ITE 2017). For single family housing (ITE 210), the fitted curve equation is EXP(0.99*LN(vehicles)+1.93). To approximate the average number of vehicles in the ITE studies, vehicles available were divided by 191 and the equation result multiplied by 191. For multifamily housing (ITE 220), the fitted curve equation is (3.94*vehicles)+293.58 (ITE 2012).
(6) Housing units from Table B25024, American Community Survey, 2015-2019.

Residential Vehicle Trips Adjustment Factors

A vehicle trip end is the out-bound or in-bound leg of a vehicle trip. As a result, so to not double count trips, a standard 50 percent adjustment is applied to trip ends to calculate a vehicle trip. For example, the out-bound trip from a person's home to work is attributed to the housing unit and the trip from work back home is attributed to the employer.

However, an additional adjustment is necessary to capture City residents' work bound trips that are outside of the City. The trip adjustment factor includes two components. According to the National Household Travel Survey (2009), home-based work trips are typically 31 percent of out-bound trips (which are 50 percent of all trip ends). Also, utilizing the most recent data from the Census Bureau's web application "OnTheMap", 49 percent of Idaho Falls workers travel outside the City for work. In combination, these factors account for 8 percent of additional production trips (0.31 x 0.50 x 0.49 = 0.08). Shown in Figure 59, the total adjustment factor for residential housing units includes attraction trips (50 percent of trip ends) plus the journey-to-work commuting adjustment (8 percent of production trips) for a total of 58 percent.

Figure 59. Trip Adjustment Factor for Commuters

Trip Adjustment Factor for Commuters

Employed Idaho Falls Residents (2018)	28,349
Residents Working in the City (2018)	14,433
Residents Commuting Outside of the City for Work	13,916
Percent Commuting Out of the City	49%
Additional Production Trips	**8%**

Standard Trip Adjustment Factor	**50%**
Residential Trip Adjustment Factor	**58%**

Source: U.S. Census, OnTheMap Application, 2018

Nonresidential Vehicle Trips

Vehicle trip generation for nonresidential land uses are calculated by using ITE's average daily trip end rates and adjustment factors found in their recently published 10th edition of Trip Generation. To estimate the trip generation in Idaho Falls, the weekday trip end per 1,000 square feet factors highlighted in Figure 60 are used.

Figure 60. Institute of Transportation Engineers Nonresidential Factors

ITE Code	Land Use	Demand Unit	Wkdy Trip Ends Per Dmd Unit	Wkdy Trip Ends Per Employee
110	Light Industrial	1,000 Sq Ft	4.96	3.05
130	Industrial Park	1,000 Sq Ft	3.37	2.91
140	Manufacturing	1,000 Sq Ft	3.93	2.47
150	Warehousing	1,000 Sq Ft	1.74	5.05
254	Assisted Living	bed	2.60	4.24
520	Elementary School	1,000 Sq Ft	19.52	21.00
610	Hospital	1,000 Sq Ft	10.72	3.79
710	General Office (avg size)	1,000 Sq Ft	9.74	3.28
714	Corporate Headquarters	1,000 Sq Ft	7.95	2.31
760	Research & Dev Center	1,000 Sq Ft	11.26	3.29
770	Business Park	1,000 Sq Ft	12.44	4.04
820	Shopping Center (avg size)	1,000 Sq Ft	37.75	16.11

Source: Trip Generation, Institute of Transportation Engineers, 10th Edition (2017)

For nonresidential land uses, the standard 50 percent adjustment is applied to Office, Industrial, and Institutional. A lower vehicle trip adjustment factor is used for Retail because this type of development attracts vehicles as they pass-by on arterial and collector roads. For example, when someone stops at a convenience store on their way home from work, the convenience store is not their primary destination.

In Figure 61, the Institute for Transportation Engineers' land use code, daily vehicle trip end rate, and trip adjustment factor is listed for each land use.

Figure 61. Daily Vehicle Trip Factors

Land Use	ITE Codes	Daily Vehicle Trip Ends	Trip Adj. Factor
Residential (per housing unit)			
Single Family	210	10.60	58%
Multifamily	220	4.70	58%
Nonresidential (per 1,000 square feet)			
Retail	820	37.75	38%
Office	710	9.74	50%
Industrial	110	4.96	50%
Institutional	610	10.72	50%

Generation, 10th Edition (2017); National Household Travel Survey, 2009

VEHICLE TRIP PROJECTION

The base year vehicle trip totals and vehicle trip projections are calculated by combining the vehicle trip end factors, the trip adjustment factors, and the residential and nonresidential assumptions for housing stock and floor area. Citywide, residential land uses account for 136,271 vehicle trips and nonresidential land uses account for 150,340 vehicle trips in the base year (Figure 62).

Through 2031, it is projected that daily vehicle trips will increase by 42,194 trips with the majority of the growth being generated by single family (44%) and retail (24%) development.

Figure 62. Total Daily Vehicle Trip Projections

Development Type	Base Year 2021	2022	2023	2024	2025	2026	2027	2028	2029	2030	2031	Total Increase
Residential Trips												
Single Family	117,645	119,514	121,383	123,252	125,121	126,990	128,859	130,728	132,597	134,466	136,335	**18,690**
Multifamily	18,626	18,746	18,866	18,986	19,106	19,226	19,346	19,466	19,586	19,705	19,825	**1,199**
Subtotal	136,271	138,260	140,249	142,238	144,227	146,216	148,205	150,194	152,183	154,172	156,161	**19,889**
Nonresidential Trips												
Retail	81,304	82,331	83,358	84,385	85,413	86,440	87,467	88,494	89,521	90,548	91,575	**10,271**
Office	28,461	28,913	29,365	29,817	30,270	30,722	31,174	31,626	32,078	32,530	32,982	**4,521**
Industrial	14,939	15,284	15,628	15,972	16,316	16,660	17,004	17,348	17,692	18,037	18,381	**3,441**
Institutional	25,636	26,043	26,450	26,857	27,265	27,672	28,079	28,486	28,893	29,301	29,708	**4,072**
Subtotal	150,340	152,571	154,801	157,032	159,263	161,493	163,724	165,954	168,185	170,415	172,646	**22,305**
Vehicle Trips												
Grand Total	286,612	290,831	295,051	299,270	303,489	307,709	311,928	316,148	320,367	324,587	328,806	**42,194**

Source: Institute of Transportation Engineers, *Trip Generation*, 10th Edition (2017)

Memorandum

File #: 21-394 **City Council Meeting**

FROM: Brad Cramer, Director
DATE: Tuesday, February 22, 2022
DEPARTMENT: Community Development Services

Subject
Public Hearing for a Resolution adopting "Imagine IF: A Plan to Move Idaho Falls Forward Together" as the City's Comprehensive Plan.

Council Action Desired

☐ Ordinance ☒ Resolution ☐ Public Hearing
☐ Other Action (Approval, Authorization, Ratification, etc)
Approve the Resolution adopting "Imagine IF: A Plan to Move Idaho Falls Forward Together" as the City's Comprehensive Plan and give authorization for the Mayor and City Clerk to execute the necessary documents (or take other action deemed appropriate).

Description, Background Information & Purpose

Attached is a resolution adopting "Imagine IF: A Plan to Move Idaho Falls Forward Together" as the City's Comprehensive Plan. The final draft of the document can be accessed at www.imagineif.city. Imagine IF reflects the results of a tremendous amount of public comment and engagement, background research, interviews, surveys, and recommendations from the project advisory committee. It will replace the current Comprehensive Plan which was adopted in December 2013. The Planning and Zoning Commission considered the plan at its October 19, 2021, meeting and recommended approval by a 5-1 vote. The plan was reconsidered on January 4, 2022, after a section was added regarding impact fees. At that meeting, the Planning and Zoning Commission unanimously voted to recommend approval of the Comprehensive Plan Amendment as presented. Staff concurs with this recommendation.

Alignment with City & Department Planning Objectives

☐ ☐ ☒ ☐ ☒ ☐ ☒ ☐

The policies in the plan are consistent with many policies and goals related to Good Governance, Growth, Sustainability, and Livable Communities

Interdepartmental Coordination

Airport, Fire, Idaho Falls Power, Legal, Library, Municipal Services, Parks and Recreation, Police, and Public Works all contributed to the plan in some way. CDS is grateful for their participation and contributions.

Fiscal Impact

NA

Legal Review

Legal has reviewed the Comprehensive Plan and resolution.

RESOLUTION NO. 2022-

A RESOLUTION OF THE CITY OF IDAHO FALLS, IDAHO, A MUNICIPAL CORPORATION OF THE STATE OF IDAHO, ADOPTING A COMPREHENSIVE PLAN; AND PROVIDING THAT THIS RESOLUTION BE EFFECTIVE UPON ITS PASSAGE, APPROVAL, AND PUBLICATION ACCORDING TO LAW.

WHEREAS, pursuant to Idaho Code Section 67-6508, the City has a duty to conduct a comprehensive planning processes designed to prepare, implement, and periodically review and update its Comprehensive Plan; and

WHEREAS, to fulfill these duties the City conducted various studies, interviews, surveys, public meetings, and other activities to better inform the Comprehensive Plan and its policies; and

WHEREAS, prior to recommending adoption of the Comprehensive Plan to the Council, the City Planning and Zoning Commission followed the procedures identified in Idaho Code Section 67-6509 for a Plan Amendment and held a public hearing on February 24, 2022 and received public comment; and

WHEREAS, the Comprehensive Plan includes the City's Impact Fee Study and Capital Improvement Plan schedule; and

WHEREAS, the recommendations of the Comprehensive Plan address current growth issues facing the City and will serve as a guide for future planning and zoning decisions by the City.

NOW, THEREFORE, BE IT RESOLVED BY THE MAYOR AND CITY COUNCIL OF THE CITY OF IDAHO FALLS, IDAHO, AS FOLLOWS:

1. "Imagine IF, A Plan to Move Idaho Falls Forward Together," a copy of which is attached hereto and by this reference made a part hereof, is hereby adopted as the official Comprehensive Plan of the City of Idaho Falls, Idaho, and supersedes and replaces all current and previous Comprehensive Plans adopted by the City; and

2. "Imagine IF, A Plan to Move Idaho Falls Forward Together" shall become effective upon its adoption by the Council and execution by the Mayor; and

3. A copy of such Comprehensive Plan shall be kept on file at the office of the City Clerk.

ADOPTED and effective this 24 day of February, 2022.

ATTEST:	CITY OF IDAHO FALLS, IDAHO
_____	_____
Kathy Hampton, City Clerk	Rebecca L. Noah Casper, Ph.D., Mayor

(SEAL)

STATE OF IDAHO)
) ss:
County of Bonneville)

I, KATHY HAMPTON, CITY CLERK OF THE CITY OF IDAHO FALLS, IDAHO, DO HEREBY CERTIFY:

> That the above and foregoing is a full, true and correct copy of the Resolution entitled, "A RESOLUTION OF THE CITY OF IDAHO FALLS, IDAHO, A MUNICIPAL CORPORATION OF THE STATE OF IDAHO, ADOPTING A COMPREHENSIVE PLAN; AND PROVIDING THAT THIS RESOLUTION BE EFFECTIVE UPON ITS PASSAGE, APPROVAL, AND PUBLICATION ACCORDING TO LAW."

_____
Kathy Hampton, City Clerk

(SEAL)

Memorandum

File #: 21-416 **City Council Meeting**

FROM: Chris H Fredericksen
DATE: Wednesday, February 16, 2022
DEPARTMENT: Public Works

Subject

Public Hearing and Ordinance to Adopt, Collect and Administer City Development Impact Fees

Council Action Desired

☒ Ordinance ☐ Resolution ☒ Public Hearing
☐ Other Action (Approval, Authorization, Ratification, etc)

Approve the Ordinance to Adopt, Collect and Administer City Development Impact Fees under a suspension of the rules requiring three complete and separate readings and request that it be ready by title and published by summary (or consider the Ordinance on the first reading and that it be read by title, reject the Ordinance, or take other action deemed appropriate).

Description, Background Information & Purpose

Idaho Code Title 67, Chapter 82 authorizes cities and counties to impose development impact fees to cover the costs of necessary infrastructure and facility improvements in compliance with the requirements of the Act.

In order to implement an equitable impact fee system for the public facilities identified and to include 1.) parks, 2.) police, 3.) fire/EMS and 4.) transportation, the City retained TischlerBise, Inc. to prepare an impact fee study titled "Capital Improvement Plan and Development Impact Fee Study of City of Idaho Falls, Idaho 2021", dated December 15, 2021. The study developed maximum supportable development impact fees that could be imposed on new development to meet the new demands generated for public facilities within the City.

The City's Legal Department has developed the proposed Ordinance in compliance with the provisions required by State Statute. Staff recommends approval of the Ordinance and an effective date for implementation of May 1, 2022.

Alignment with City & Department Planning Objectives

☐ ☐ ☒ ☐ ☒ ☒ ☐ ☒

Adoption of the impact fee Ordinance supports the community-oriented results of safe and secure community, well-planned growth and development, livable community and reliable public infrastructure and transportation.

Interdepartmental Coordination

Reviews have been conducted with all relevant city departments regarding the proposed Ordinance.

Fiscal Impact

If approved for implementation, impact fees collected from new development would be deposited into four separate accounts and would only be spent on allowable public improvements as specified within the plan.

Legal Review

The Legal Department developed the proposed Ordinance.

0-00-00-0-OTH-2021-07
2022-15

ORDINANCE NO.

AN ORDINANCE OF THE CITY OF IDAHO FALLS, IDAHO, A MUNICIPAL CORPORATION OF THE STATE OF IDAHO; ADOPTING TITLE 10, CHAPTER 8 TO ESTABLISH A COMPREHENSIVE STRUCTURE TO ADOPT, COLLECT, AND ADMINISTER CITY DEVELOPMENT IMPACT FEES; PROVIDING SEVERABILITY, CODIFICATION, PUBLICATION BY SUMMARY, AND ESTABLISHING EFFECTIVE DATE.

WHEREAS, a development impact fee program provides an equitable means of providing public facilities and infrastructure needed to serve new growth and development; and

WHEREAS, Idaho Code Title 67, Chapter 82 (the "Idaho Development Fee Act") authorizes governmental entities which comply with the requirements of said Act to impose by ordinance development impact fees; and

WHEREAS, the Council finds that this Ordinance meets the standards established by the Act for the adoption of development impact fee ordinances; and

WHEREAS; the Council believes that this Ordinance improves City functions; and

WHEREAS, a primary function of the City is to provide infrastructure and facilities necessary to deliver safe, effective, and efficient services which provide a high quality of life; and

WHEREAS, these infrastructure and facilities includes major transportation, parks and recreation, police, and fire/EMS facilities; and

WHEREAS, the growth of the City puts increased pressure on the infrastructure and facilities necessary to deliver these services and often necessitates improvements to infrastructure and facilities; and

WHEREAS, the City desires to provide an equitable method of paying for necessary improvements to these infrastructure and facilities; and

WHEREAS, the City recognizes that because new growth and development creates the need for these infrastructure and facility improvements and therefore should bear the costs of such improvements rather than existing taxpayers; and

WHEREAS, Idaho Code Title 67, Chapter 82 (the "Idaho Development fee Act") provides for cities and counties to impose development impact fees to cover the costs of necessary infrastructure and facility improvements when they comply with the requirements of the Act; and

WHEREAS, the Council finds that this Ordinance meets the standards established by the Act for the adoption of development impact fee ordinances; and

WHEREAS, adopting the ordinance will effectively and equitably assist in funding necessary improvements to City infrastructure and facilities created by growth and development.

NOW, THEREFORE, BE IT ORDAINED BY THE MAYOR AND COUNCIL OF THE CITY OF IDAHO FALLS, IDAHO, THAT:

SECTION 1: Title 10, Chapter 8 of the City Code of the City of Idaho Falls, Idaho, is hereby adopted as follows:

10-8-1: LEGISLATIVE FINDINGS. The City finds that:

A. Based on the City Comprehensive Plan adopted pursuant to Title 67, Chapter 65, Idaho Code, including, but not limited to, the capital improvements element of the Comprehensive Plan, the capital facilities plans of various City Departments, and the general governmental goal of protecting the health, safety, and general welfare of the residents of the City, and its area of City impact, it is necessary that the City's public facilities for public safety (police and fire/EMS); and parks and recreation; and transportation to accommodate new growth and development within the City and its area of City impact.

B. New residential and nonresidential growth and development imposes and will continue to impose increasing demands upon the Public Facilities, as defined in this Chapter.

C. The revenues generated from new residential and nonresidential growth and development often do not generate sufficient general funds to provide the necessary improvements of these Public Facilities to accommodate new growth and development.

D. New growth and development are expected to continue and will place ever increasing demands on the City to provide and expand the Public Facilities to serve new growth and development.

E. The City has planned for the improvement of the Public Facilities in the capital improvements element of the City Comprehensive Plan.

F. The creation of an equitable impact fee system will enable the City to impose a proportionate share of the costs of needed improvements to the Public Facilities to accommodate new growth and development, and will assist the City in implementing the capital improvements element of the Comprehensive Plan.

G. In order to implement an equitable impact fee system for the Public Facilities, the City retained TischlerBise to prepare an impact fee study for these types of facilities. The resulting document titled "Capital Improvement Plan and Development Impact Fee Study of City of Idaho Falls, Idaho 2021", dated December 15, 2021, as amended from time to time by the Council, (the "Impact Fee Study"), recommended for approval by the Impact Fee Advisory Committee, is on file in the office of the Clerk.

H. The Impact Fee Study is consistent with the capital improvements element of the Comprehensive Plan, and uses the levels of service set forth in the Comprehensive Plan and the Capital Improvement Plan for these Public Facilities.

I. The Impact Fee Study sets forth reasonable methodologies and analyses for determining the impacts of various types of new growth and development on the Public Facilities and determines the cost of acquiring or constructing the improvements necessary to meet the demands for such Public Facilities created by new growth and development.

J. The Impact Fee Study uses a calculation methodology in accordance with generally accepted accounting principles that is net of credits for the present value of revenues that will be generated by new growth and development based on historical funding patterns and that are anticipated to be available to pay for system improvements, including taxes, assessments, user fees, and intergovernmental transfers, and includes consideration of the following factors:

1. The cost of existing system improvements within the service area;

2. The means by which existing system improvements have been financed;

3. The extent to which the new growth and development will contribute to the cost of system improvements through taxation, assessment, or developer or landowner contributions, or has previously contributed to the cost of system improvements through developer or landowner contributions;

4. The extent to which the new growth and development is required to contribute to the cost of existing system improvements in the future;

5. The extent to which the new growth and development should be credited for providing system improvements, without charge to other properties within the service area;

6. Extraordinary costs, if any, incurred in serving the new growth and development;

7. The time and price differential inherent in a fair comparison of impact fees paid at different times; and

8. The availability of other sources of funding system improvements including, but not limited to, user charges, general tax levies, transfers, and special taxation.

K. The maximum allowable impact fees described in this Chapter are based on the Impact Fee Study, and do not exceed the costs of system improvements for the Public Facilities to serve new growth and development that will pay the impact fees.

L. The police, fire/EMS, parks and recreation, and transportation Public Facilities included in the calculation of impact fees in the Impact Fee Study will benefit all new growth and development throughout the City, and it is therefore appropriate to treat all areas of the City and the area of City impact as a single service area for purposes of calculating, collecting and spending the impact fees collected.

M. There is both a rational nexus and a rough proportionality between the development impacts created by each type of development covered by this Chapter and the impact fees that such development will be required to pay.

N. This Chapter creates a system by which impact fees paid by new growth and development will be used to finance, defray or to provide capital improvements for the Public Facilities in ways that benefit the development for which impact fees were paid.

O. This Chapter creates a system under which impact fees shall not be used to correct existing deficiencies in Public Facilities, or to replace or rehabilitate existing Public Facilities, or to pay for routine operation or maintenance of those Public Facilities.

P. This Chapter is consistent with all applicable provisions of Title 67, Chapter 82, Idaho Code, concerning impact fee ordinances.

10-8-2: AUTHORITY, APPLICABILITY, AND EFFECTIVE DATE.

A. This Chapter is enacted pursuant to the City's general police powers pursuant to the authority granted to the City by Idaho Code Title 50, and pursuant to the authority granted to the City by Idaho Code § 67-8201, et seq.

B. The provisions of this Chapter shall apply to all of the territory within the limits of the City and to any unincorporated areas of the City within the City's area of city impact where the City has executed an intergovernmental agreement with Bonneville County for purposes of collection or expenditure of impact fees pursuant to Idaho Code § 67-8204A, and other applicable laws of the State of Idaho.

C. This Chapter is effective May 1, 2022 (the "effective date"), which effective date is at least thirty (30) days subsequent to the passage, approval and publication, according to law, of Ordinance _____, which adopted the provisions of this Chapter.

D. Applications for building permits received by the City prior to the effective date of this Chapter, or amendments to this Chapter, adopting impact fees or amending or adopting any methodology by which impact fees are calculated, shall be exempt from that portion of this Chapter, or amendment enacted after such building permit application, if a valid building permit has been issued or construction has commenced prior to the effective date of this Chapter or any amendment. For building permits that expire or are revoked after the effective date of this Chapter, the fee payer shall be entitled to a refund of previously paid impact fees as provided in this Chapter, provided that in the case of reapplication for building permit, the impact fee in effect at the time of the reapplication shall be paid.

10-8-3: INTENT.

A. The intent of this Chapter is to promote the health, safety and general welfare of the residents of the City and its area of City impact.

B. The intent of this Chapter is to be consistent with those principles for allocating a fair share of the cost of capital improvements to Public Facilities to serve new growth and

development in compliance with the provisions set forth in Idaho Code § 67-8201, et seq. The provisions of this Chapter shall be interpreted, construed and enforced in accordance with the provisions set forth in Idaho Code § 67-8201, et seq.

C. The intent of this Chapter is that impact fees should be charged, collected, and expended for police, fire/EMS, parks and recreation, and transportation capital improvements to increase the service capacity of such categories of Public Facilities, which capital improvements are included in approved capital improvements plans.

D. The intent of this Chapter is to ensure that Public facilities are available to serve new growth and development; new growth and development bears a proportionate share of the cost of police, fire/EMS, parks and recreation, and transportation capital improvements to such Public Facilities; such proportionate share does not exceed the cost of the capital improvements to such Public Facilities required to serve new growth and development; and the funds collected from new growth and development are used for capital improvements for Public Facilities that benefit new growth and development.

E. It is not the intent of this Chapter to collect any monies from new growth and development in excess of the actual amount necessary to offset new demands for capital improvements to Public Facilities created by such new growth and development.

F. It is not the intent of this Chapter that the impact fees be used to remedy any deficiency in police, fire/EMS, parks and recreation, and transportation capital improvements existing on the effective date hereof, or ever be used to replace, rehabilitate, maintain and/or operate any Public Facilities.

G. It is not the intent of this Chapter that any monies collected from an impact fee deposited in an impact fee fund ever be commingled with monies from a different fund or ever be used for capital improvements that are different from those for which the impact fee was paid.

H. It is not the intent of this Chapter that impact fees be used for:

1. Construction, acquisition or expansion of public facilities other than capital improvements identified in the capital improvements plans.

2. Repair, operation or maintenance of existing or new capital improvements.

3. Upgrading, updating, expanding or replacing existing capital improvements to serve existing development in order to meet stricter safety, efficiency, environmental or regulatory standards.

4. Upgrading, updating, expanding or replacing existing capital improvements to serve existing development to provide better service to existing development.

5. Administrative and operating costs of the City unless such costs are attributable to development of the capital improvements plans used to determine impact fees by a surcharge imposed by ordinance on the collection of an impact fee, which surcharge shall not exceed a development's proportionate share of the cost of preparing the capital

improvements plans.

6. Principal payments and interest or other finance charges on bonds or other indebtedness except financial obligations issued by or on behalf of the City to finance capital improvements identified in the capital improvements plans.

10-8-4: DEFINITIONS. The following words and phrases, when used in this Chapter, shall have, unless the context clearly indicates otherwise, the following meanings:

AFFORDABLE HOUSING: Housing affordable to families whose incomes do not exceed eighty (80) percent of the median income for the service area.

BUILDING PERMIT: An official document or certificate by that name issued by the City authorizing the construction or siting of any building.

CAPITAL IMPROVEMENTS: Improvements with a useful life of ten (10) years or more, by new construction or other action, which increase the service capacity of a Public Facility.

CAPITAL IMPROVEMENTS ELEMENT: A component of the City's Comprehensive Plan.

CAPITAL IMPROVEMENTS PLAN: A plan adopted pursuant to this Chapter that, in part, identifies capital improvements for which impact fees may be used as a funding source.

DEVELOPER: A person who subdivides or proposes to subdivide land, whether as an owner or an agent of an owner, and any person who installs improvements or structures on such land.

DEVELOPMENT: Any construction or installation of a building or structure, or any change in use of a building or structure, or any change in the use, character, or appearance of land, which creates additional demand and need for Public Facilities or the subdivision of property that would permit any change in the use, character, or appearance of land.

DEVELOPMENT APPROVAL: Any written authorization from a governmental entity which authorizes the commencement of a development.

DEVELOPMENT REQUIREMENT: A requirement attached to a development approval or other governmental action approving or authorizing a particular development including, without limitation, a rezoning, which development requirement compels the payment, dedication or contribution of goods, services, land and/or money as a condition of approval.

EXTRAORDINARY COSTS: Those costs incurred as a result of extraordinary impact, as defined in this Chapter.

EXTRAORDINARY IMPACT: An impact which is reasonably determined by the City to result in the need for police, fire/EMS, parks and recreation, and/or transportation system improvements, the cost of which will significantly exceed the sum of the impact fees to be generated from the project; or result in the need for police, fire/EMS, parks and recreation, and transportation system improvements that are not identified in the capital improvements plans.

FEE ADMINISTRATOR: The official appointed by the Mayor, with Council approval, and authorized to administer this Chapter.

FEE PAYER: A person who pays or is required to pay an impact fee or the fee payer's successor in interest.

GOVERNMENTAL ENTITY: Any unit of local government that is empowered by Idaho Code § 67-8201, et seq., to adopt an impact fee ordinance.

IMPACT FEE: A payment of money imposed as a condition of development approval to pay for a proportionate share of the cost of system improvements needed to serve development. The term does not include a charge or fee to pay the administrative, plan review or inspection costs associated with permits required for development.

IMPACT FEE STUDY: The document entitled the "Capital Improvement Plan and Development Impact Fee Study of City of Idaho Falls, Idaho 2021", dated December 15, 2021, as amended from time to time by the Council.

LAND USE ASSUMPTIONS: A description of the service area and projections of land uses, densities, intensities, and population in the service area over at least a twenty (20) year period.

LEVEL OF SERVICE: A measure of the relationship between service capacity and service demand for Public Facilities.

MANUFACTURED HOME: A structure, constructed after June 15, 1976, pursuant to Idaho Code HUD manufactured home construction and safety standards.

MODULAR BUILDING: Any building or building component (other than a Manufactured Home, as defined in this Chapter) which is constructed according to standards contained in any City-adopted building code or any amendments thereto, which is of closed construction and is either entirely or substantially prefabricated or assembled at a place other than the building site.

NONRESIDENTIAL DEVELOPMENT:

A. RETAIL: Establishments primarily selling merchandise, eating/drinking places, and entertainment uses. Retail includes, but is not limited to, shopping centers, supermarkets, pharmacies, restaurants, bars, nightclubs, automobile dealerships, movie theaters, and lodging (hotel/motel).

B. OFFICE: Establishments providing management, administrative, professional, or business services. Office includes, but is not limited to, banks, business offices, medical offices, and veterinarian clinics.

C. INDUSTRIAL: Establishments primarily engaged in the production and transportation of goods. Industrial includes, but is not limited to, manufacturing plants, trucking companies, warehousing facilities, utility substations, power generation facilities, and telecommunications buildings.

D. INSTITUTIONAL: Public and quasi-public buildings providing educational, social assistance, or religious services. Institutional includes, but is not limited to, schools, universities, churches, daycare facilities, hospitals, health care facilities, and government buildings.

PRESENT VALUE: The total current monetary value of past, present or future payments, contributions or dedications of goods, services, materials, construction or money.

PROJECT: A particular development on an identified parcel of land.

PROJECT IMPROVEMENTS: Site improvements and facilities that are planned and designed to provide service for a project and that are necessary for the use and convenience of the occupants or users of the Project.

PROPORTIONATE SHARE: That portion of the cost of system improvements determined pursuant to Idaho Code § 67-8207, and this Chapter, which reasonably relates to the service demands for Public Facilities of a project.

PUBLIC FACILITY(IES):

A. Public safety facilities, including police and fire/EMS facilities; and

B. Parks open space and recreation areas, and related capital improvements; and

C. Transportation facilities, including arterial streets, arterial intersections, arterial bridges, arterial appurtenances, and related arterial capital improvements.

RESIDENTIAL DEVELOPMENT HOUSING UNITS:

A. SINGLE FAMILY HOUSING UNITS:

1. SINGLE FAMILY DETACHED: A one-unit structure detached from any other house with open space on all four sides. Such structures are considered detached even if they have an adjoining shed or garage. A one-family house that contains a business is considered detached as long as the building has open space on all four sides.

2. SINGLE FAMILY ATTACHED (TOWNHOUSE): A one-unit structure that has one or more walls extending from ground to roof separating it from adjoining structures. In row houses (sometimes called townhouses), double houses, or houses attached to nonresidential structures, each house is a separate, attached structure if the dividing or common wall goes from ground to roof.

3. MOBILE HOME: A Manufactured Home, Modular Building, including both occupied and vacant mobile homes, to which no permanent rooms have been added. A Mobile Home used only for business purposes or for extra sleeping space or a Mobile Home for sale on a dealer's lot, at the factory, or in storage is not counted in the housing inventory.

B. MULTIFAMILY HOUSING UNITS: Two (2) or more units (duplexes and apartments) within a structure containing two (2) or more housing units, further categorized as units in structures with 2, 3 or 4, 5 to 9, 10 to 19, 20 to 49, and 50 or more apartments; a boat, recreational vehicle (RV), van, and the like that includes any living quarters occupied as a housing unit that does not fit the other categories (e.g., houseboats, railroad cars, campers, and vans). Recreational vehicles, boats, vans, railroad cars, and the like are included only if they are occupied as a current place of residence.

SERVICE AREA: The territory within the limits of the City and the City's area of City impact.

SUCCESSOR IN INTEREST: A person who gains legal title in real property for which an impact fee is paid or a credit is approved pursuant to the terms of this Chapter.

SYSTEM IMPROVEMENT COSTS: Costs incurred for construction or reconstruction of system improvements, including design, acquisition, engineering and other costs attributable thereto, and also including, without limitation, the type of costs described in Idaho Code § 50-1702(h), to provide additional public facilities needed to serve new growth and development. For clarification, system improvement costs do not include:

A. Construction, acquisition or expansion of public facilities other than capital improvements identified in the capital improvements plans;

B. Repair, operation or maintenance of existing or new capital improvements;

C. Upgrading, updating, expanding or replacing existing capital improvements to serve existing development in order to meet stricter safety, efficiency, environmental or regulatory standards;

D. Upgrading, updating, expanding or replacing existing capital improvements to provide better service to existing development;

E. Administrative and operating costs of the governmental entity unless such costs are attributable to development of the capital improvements plans, as provided in Idaho Code § 67-8208; or

F. Principal payments and interest or other finance charges on bonds or other indebtedness except financial obligations issued by or on behalf of the governmental entity to finance capital improvements identified in the capital improvements plans.

SYSTEM IMPROVEMENTS: In contrast to project improvements, means capital improvements to public facilities that are designed to provide service to a service area including, without limitation, the type of improvements the City has the authority to make as described in Idaho Code § 50-1703.

10-8-5: IMPOSITION AND COMPUTATION OF IMPACT FEES.

A. Any application for or building permit required or issued, enabling the construction or the alteration or expansion of an existing structure or improvement, and, in the case of

construction that does not require a building permit, any building that takes place on or after the effective date of this Chapter, shall be subject to the imposition of impact fees in the manner and amount set forth in this Chapter. The methodology adopted for the purpose of determining police, fire/EMS, parks and recreation, and transportation impact fees shall be based upon the assumptions set forth in the Impact Fee Study.

B. Impact fees shall be required as a condition of approval of all residential and nonresidential development in the service area for which a building permit is required or issued, including the alteration or expansion of an existing structure or improvement, and shall be payable prior to the issuance of any building permit (or installation permit in the case of a manufactured home) for a residential development housing unit or a nonresidential development. Except as otherwise provided herein, after the effective date of this Chapter, no building permit shall be issued, or occupancy or use allowed, until the impact fees described in this Chapter have been paid, unless the development or alteration or improvement for which the permit is sought is exempted pursuant this Chapter or approved credits are used to cover the impact fee, as set forth in this Chapter. The Fee Administrator shall have the authority to withhold a building permit or stop construction, as the case may be, until the appropriate impact fee has been collected.

C. A fee payer required by this Chapter to pay an impact fee may choose to have the amount of such impact fee determined pursuant to either the fee schedule or subsections (D) through (F) of this Section. If the fee payer chooses to have the amount of such impact fee determined pursuant to subsections (D) through (F) of this Section, such impact fee shall be subject to the adjustment described in this Chapter, if applicable. If the project is a mix of those uses listed on the fee schedule, then the impact fees shall be determined by adding up the impact fees that would be payable for each use as if it were a freestanding use pursuant to the fee schedule.

D. Individual assessment of impact fees is permitted in situations where the fee payer can demonstrate by clear and convincing evidence that the established impact fee is inappropriate for the Project. Written application for individual assessment shall be made to the Fee Administrator at any time prior to receiving building permit(s). Late applications for individual assessment of impact fees may be considered for a period of sixty (60) days after the receipt of a building permit only if the fee payer demonstrates that the facts supporting such application were not known or discoverable prior to receipt of a building permit and that undue hardship would result if said application is not considered. Such independent impact fee calculation study for the fee payer's development shall be prepared at the fee payer's cost by a qualified professional and contain studies, data and other relevant information and be submitted to the Fee Administrator for review. Any such study shall be based on the same methodology and the same level of service standards, improvements and costs used in the Impact Fee Study, and shall document the methodologies and assumptions used. The City may hire a professional consultant to review any independent impact fee calculation study on behalf of the City, and may charge the reasonable costs of such review to the fee payer.

E. Any independent impact fee calculation study submitted by a fee payer may be accepted, rejected or accepted with modifications by the City as the basis for calculating impact fees. The City shall not be required to accept any study or documentation the City reasonably deems to be inaccurate or unreliable. The City shall have the authority to request that the fee payer

submit additional or different documentation for consideration in connection with review of any independent impact fee calculation. If such additional or different documentation is accepted or accepted with modifications as a more accurate measure of the impact fees due in connection with fee payer's proposed development than the applicable impact fees set forth in the fee schedule, then the impact fee due under this Chapter shall be calculated according to such documentation.

F. The Fee Administrator shall render a written decision establishing the impact fees in connection with the individual assessment within thirty (30) days of the date a complete application is submitted. The decision shall include an explanation of the calculation of the impact fees, shall specify the system improvement(s) for which the impact fees are intended to be used, and shall include an explanation of the following factors considered:

1. The cost of existing system improvements within the service area;

2. The means by which existing system improvements have been financed;

3. The extent to which the new growth and development will contribute to the cost of system improvements through taxation, assessment, or developer or landowner contributions, or has previously contributed to the cost of system improvements through developer or landowner contributions;

4. The extent to which the new growth and development is required to contribute to the cost of existing system improvements in the future;

5. The extent to which the new growth and development should be credited for providing system improvements, without charge to other properties within the service area;

6. Extraordinary costs, if any, incurred in serving the new growth and development;

7. The time and price differential inherent in a fair comparison of impact fees paid at different times; and

8. The availability of other sources of funding system improvements including, but not limited to, user charges, general tax levies, transfers, and special taxation.

G. Certification of the impact fee for a Project may be applied for in the following manner:

1. Written application may be made to the Fee Administrator not later than thirty (30) days following applications for, or requirement of, a building permit for construction or alteration or expansion of an existing structure, or improvement on or within a Project. Late applications for certification of the impact fee will not be considered unless the fee payer demonstrates that the facts supporting such application were not known or discoverable until after the time had run and that undue hardship would result if said application is not considered.

2. The Fee Administrator shall provide the fee payer with a written impact fee

certification for the Project within thirty (30) days of the date a complete application is submitted. The certification provided by the Fee Administrator shall establish the impact fee for the Project in question, so long as there is no material change to the Project as identified in the certification application or the impact fee schedule. The certification shall include an explanation of factors considered, and shall specify the system improvement(s) for which the impact fee is intended to be used.

The certification shall include an explanation of the calculation of the impact fee, shall specify the system improvement(s) for which the impact fee is intended to be used, and shall include an explanation of the factors considered, which factors are identified in subsection (F) of this Section.

H. Appeals of the Fee Administrator's determination of an individual assessment or certification shall be made to the City as provided further in this Chapter.

I. The City recognizes that there may be circumstances where the anticipated fiscal impacts of a proposed development are of such magnitude that the City may be unable to accommodate the development without excessive or unscheduled public expenditures that exceed the amount of the anticipated impact fees from such development. If the City determines that a proposed development would create such an extraordinary impact on the City's police, fire/EMS, parks and recreation, and/or transportation public facilities, the City may refuse to approve the proposed development. In the alternative, the City may calculate a pro rata share per residential development housing unit, or square feet of nonresidential development, of the extraordinary impact and charge a reasonable extraordinary impact fee that is greater than would ordinarily be charged.

J. If the City discovers an error in its impact fee formula that results in assessment or payment of more than a proportionate share, City shall, at the time of assessment on a case-by-case basis, adjust the impact fee to collect no more than a proportionate share or discontinue the collection of any impact fees until the error is corrected by Ordinance.

10-8-6: PAYMENT OF IMPACT FEES

A. After the effective date of this Chapter, all fee payers shall pay the impact fees as provided by this Chapter to the Fee Administrator following application for a building permit and prior to the issuance of any building permit for a residential development housing unit, or nonresidential development.

B. All impact fees paid by a fee payer pursuant to this Chapter shall be promptly deposited in the impact fee fund described in this Chapter.

10-8-7: IMPACT FEE FUNDS ESTABLISHED. REFUNDS OF IMPACT FEES PAID.

A. There is hereby established a police impact fee fund into which shall be deposited all police impact fees for the purpose of ensuring police impact fees collected pursuant hereto are designated for the accommodation of police capital improvements reasonably necessary to serve new growth and development that paid the impact fee.

B. There is hereby established a fire/EMS impact fee fund into which shall be deposited all fire/EMS impact fees for the purpose of ensuring fire/EMS impact fees collected pursuant hereto are designated for the accommodation of fire/EMS capital improvements reasonably necessary to serve new growth and development that paid the impact fee.

C. There is hereby established a parks and recreation impact fee fund into which shall be deposited all parks and recreation impact fees for the purpose of ensuring parks and recreation impact fees collected pursuant hereto are designated for the accommodation of parks and recreation capital improvements reasonably necessary to serve new growth and development that paid the impact fee.

D. There is hereby established a transportation impact fee fund into which shall be deposited all transportation impact fees for the purpose of ensuring transportation impact fees collected pursuant hereto are designated for the accommodation of transportation capital improvements reasonably necessary to serve new growth and development that paid the impact fee.

E. Each impact fee fund established in this Section shall be an interest-bearing account which shall be accounted for separately from other impact fee funds and from other City funds. Any interest or other income earned on monies deposited in a fund shall be credited to such fund. Expenditures of impact fees shall be made only for the category of system improvements (including full project costs, such as design, acquisition, engineering, management, construction, project development, etc.) for which the impact fees were collected and as identified in the capital improvements plans.

F. Except as otherwise provided in this Chapter, monies from each fund, including any accrued interest, shall be limited to the financing of acquisition, expansion, and/or improvement of capital improvements, or for principal and interest payments on bonds or other borrowed revenues used to acquire, expand or improve such capital improvements, necessary to serve new growth and development. Impact fees in each established impact fee fund shall be spent within eight (8) years from the date such impact fees were collected on a first in/first out (FIFO) basis. The City may hold the impact fees longer than the prescribed time period if the city identifies, in writing:

1. A reasonable cause why the impact fees should be held longer; and

2. The anticipated date by which the impact fees will be expended but in no event longer than eleven (11) years from the date the impact fees were collected.

G. The Fee Administrator shall prepare quarterly and annual reports to be provided to the Impact Fee Advisory Committee and the Council, which reports shall:

1. Describe the amount of all impact fees collected, appropriated or spent for system improvements during the preceding quarter or year, as applicable, by category of Public Facility; and

2. Describe the percentage of tax and revenues other than impact fees collected, appropriated or spent for system improvements during the preceding quarter or year, as applicable, by category of Public Facility.

H. Funds shall be deemed expended when payment of such funds has been approved by the City. The fee payer or successor in interest shall be entitled to a refund of the impact fee if:

1. Services for which an impact fee is required are never provided;

2. A building permit or permit for installation of a manufactured home is revoked or abandoned;

3. The City, after collecting the impact fee, has failed to appropriate and expend the collected impact fees, as required by Idaho Code; or

4. The fee payer pays an impact fee under protest and a subsequent review of the impact fee paid or the completion of an individual assessment determines that the impact fee paid exceeded the proportionate share to which the City was entitled to receive.

I. When the right to a refund exists, within ninety (90) days after the City determines that a refund is due, the City shall provide written notice of entitlement to a refund, to the owner of record and the fee payer who paid the impact fees at the address shown on the application for development approval, or to a successor in interest who has notified the City of a transfer of the right or entitlement to a refund and who has provided to the City a mailing address. When the right to a refund exists, the City shall also publish the notice of entitlement to a refund within thirty (30) days after the expiration of the eight (8) year period after the date that the impact fees were collected. Such published notice shall contain the heading "Notice of Entitlement to Impact Fee Refund".

J. A refund shall include interest at one-half (½) the legal rate provided for in Idaho Code § 28-22-104, from the date on which the impact fee was originally paid.

K. In order to be eligible for a refund, a fee payer, successor in interest or owner of record shall file a written application for a refund with the Fee Administrator within six (6) months of the time such refund becomes payable under subsection (E) of this Section, or within six (6) months of publication of the notice of entitlement to a refund, whichever is later. If a successor in interest claims a refund of impact fees, the Fee Administrator may require written documentation that such rights have been transferred to the claimant prior to issuing the requested refund. Refunds shall be paid within sixty (60) days after the date on which the Fee Administrator determines that a sufficient proof of claim for a refund has been made.

L. Any person entitled to a refund shall have standing to sue for a refund under the provisions of this Chapter if there has not been a timely payment of a refund as provided herein.

10-8-8: EXEMPTIONS FROM IMPACT FEES

A. The following types of land development shall be exempt from payment of the impact fees imposed by this Chapter:

1. Rebuilding or replacing a residential development housing unit or the same

amount of square feet of a nonresidential development on the same lot and existing on the effective date of this Chapter, provided that the rebuilt or replaced residential development housing unit or nonresidential development does not increase the need for police, fire/EMS, parks and recreation, and transportation public facilities, and such residential development housing unit or nonresidential development is rebuilt or replaced and ready for occupancy within two (2) years of removal or substantial damage. For the purposes of this Subsection, "substantial damage" shall mean damage from any cause or source whereby the cost of restoring the residential development housing unit or nonresidential development to a condition allowing use of occupancy would be equal to or exceeds fifty percent (50%) of the market value before the damage occurred.

2. Construction of an unoccupied, detached accessory structure, or addition of uses related to a residential development housing unit unless it can be clearly demonstrated that the use creates a significant impact on the capacity of system improvements.

3. Remodeling or repairing a residential development housing unit or a nonresidential development in a manner that does not increase the need for police or fire/EMS or parks and recreation or transportation public facilities.

4. Placing a temporary construction trailer or office on a lot.

B. An impact fee shall be assessed for installation of a modular building or manufactured home unless the fee payer can demonstrate (by documentation, such as utility bills and tax records), either:

1. That a modular building or manufactured home was legally in place on the lot or space prior to the effective date of this Chapter; or

2. That an impact fee has been paid previously for the installation of a modular building or manufactured home on that same lot or space.

C. Developments determined by the Council that provide affordable housing may be exempt from the impact fee requirement, provided that the exempt development's proportionate share of system improvements is funded through a revenue source other than impact fees.

1. Current housing affordability guidelines published by the U.S. Department of Housing and Urban Development ("HUD") shall be used to determine whether residential development housing units in the development qualify as affordable housing.

2. Affordable housing projects are required to demonstrate that the projects will provide residential development housing units to eligible families based on HUD income and family size guidelines.

3. Providers of affordable residential development housing units shall demonstrate a long-term commitment to provide affordable housing for a period of not less than twenty (20) years.

D. Appeals of the Fee Administrator's determination shall be made as provided further in this Chapter.

10-8-9: CREDIT REIMBURSEMENTS.

A. All system improvements constructed, funded or contributed for police, fire/EMS, parks and recreation, and transportation capital improvements for which an impact fee is imposed, over and above those required by the City in connection with new development, shall result in either a credit on future impact fees or reimbursement ,at the fee payer's option, for such excess to be paid by future development that benefits from such system improvements. However, no credit or reimbursement shall be provided for:

1. Project improvements;

2. Any construction, funding or contribution not agreed to in writing by the City prior to commencement of such construction, funding or contribution; and

3. Any construction, funding or contribution of a type of capital improvements not included in the calculation of the applicable impact fee.

B. In the calculation of impact fees for a Project pursuant to this Chapter, credit shall be given for the present value of all tax and user fee revenue generated by the fee payer within the service area and used by the City for system improvements of the category for which the impact fee is being collected. If the amount of such credit exceeds the impact fee for a Project, the fee payer shall receive a credit on future impact fees.

C. In the calculation of impact fees for a Project, credit or reimbursement, at the fee payer's option, shall be given for the present value of any construction of system improvements or contribution of land or money required by the City from the fee payer for system improvements of the category for which the impact fee is being collected, including system improvements paid for through Local Improvement District assessments, if any.

D. If credit or reimbursement is due to the fee payer, the City and fee payer shall enter into a written agreement, negotiated in good faith, prior to the construction, funding or contribution. The written agreement shall include, at minimum, a description of how the system improvements are to be valued, and the amount of the credit or the amount, time, and form of reimbursement. To assist in such reimbursement, the City shall continue to collect impact fees from other developers whose proposed developments will benefit from such construction, funding or contribution, and will promptly transfer such funds to the fee payer. If a successor in interest claims a reimbursement or credit, the Fee Administrator may require written documentation that such rights have been conveyed to the claimant prior to issuing the requested reimbursement or credit.

E. Approved credits may be used to reduce the amount of impact fees of the category for which the impact fee is being collected in connection with any new growth and development until the amount of the credit is exhausted. Each time a request to use approved credits is presented to the City, the City shall reduce the amount of the applicable impact fee otherwise

due from the fee payer and shall note in City records the amount of credit remaining, if any. Upon request of the fee payer, the City shall issue a letter stating the amount of credit available. If the credit has not been exhausted within eight (8) years of the date of issuance of the first building permit for which an impact fee was due and payable, or within such other time period as may be designated in writing by the City, such credit shall lapse, unless a refund of the remaining credit is applied for as set forth in this Chapter.

F. Approved credits or reimbursement shall only be used to reduce the amount of the impact fee of the category for which the impact fee is otherwise due, and shall not be paid to the fee payer in cash or in credits against any other monies due from the fee payer to the City.

G. Credit for land dedications shall, at the fee payer's option, be valued at:

1. One hundred percent (100%) of the most recent assessed value for such land as shown in the records of the Bonneville County Assessor; or

2. That fair market value established by an MAI appraiser reasonably acceptable to the City in an appraisal paid for by the fee payer.

Credit for contribution or construction of system improvements shall be valued by the City based on complete engineering drawings, specifications, and construction cost estimates submitted by the fee payer to the City, which estimates shall be revised as actual costs become available. The City shall determine the amount of credit due based on the information submitted, or, if the City determines that such information is inaccurate or unreliable, then on alternative engineering or construction costs reasonably acceptable to the City as a more accurate measure of the value of the offered system improvements to the City.

H. Approved credits for land dedications shall become effective when the land has been conveyed to and accepted by the City in a form reasonably acceptable to the City and at no cost to the City. Approved credits for contribution or construction of system improvements shall generally become effective when:

1. All required construction has been completed and has been accepted by the City; and

2. All design, construction, inspection, testing, bonding, and acceptance procedures have been completed in compliance with all applicable requirements of the City.

Approved credits for the construction of system improvements may become effective at an earlier date if the fee payer posts security in the form of a performance bond, irrevocable letter of credit or escrow agreement in the amount and under terms reasonably acceptable to the City.

I. Credit may only be transferred by a fee payer that has received credit to such fee payer's successor in interest. The credit may be used only to offset impact fees for the same category for which the credit was issued. Credits shall be transferred by any written instrument clearly identifying which credits are being transferred, the dollar amount of the credit being transferred, and the system improvements for which the credit was issued. The instrument of

transfer shall be signed by both the transferor and transferee, and a copy of the document shall be delivered to the Fee Administrator for documentation of the transfer before the transfer shall be deemed effective.

10-8-10: APPEALS. The decisions of the Fee Administrator may be appealed as provided in this Section:

A. Any fee payer who is or may be obligated to pay an impact fee, may appeal a decision made by the Fee Administrator to the Council. Such decisions that may be appealed include:

1. The applicability of an impact fee to the development.

2. The amount of an impact fee to be paid for the development.

3. The availability, amount or application of any credit.

4. The amount of any refund, reimbursement or credit.

A fee payer may pay an impact fee under protest in order to obtain a development approval or building permit(s) and, by paying such impact fee, shall not be estopped from exercising the right of appeal provided herein, nor shall the fee payer be estopped from receiving a refund of any amount deemed to have been illegally collected. Upon final disposition of an appeal, the impact fee shall be adjusted in accordance with the decision rendered and, if necessary, a refund paid.

B. In order to pursue an appeal, the fee payer shall file a written notice of appeal with the Clerk within fifteen (15) days after the date of the decision being appealed or the date on which the fee payer submitted a payment of impact fees under protest, whichever is later. Such written appeal shall include a statement describing why the appellant believes that the decision was in error, together with copies of any documents that the appellant believes supports their claim.

C. The Clerk shall notify the fee payer of the hearing date on the appeal, which notice shall be given no less than fifteen (15) days prior to the date of the hearing. The Council shall hear the appeal within thirty (30) days after receipt of a written notice of appeal. The appellant shall have a right to attend and to present evidence in support of the appeal. The Fee Administrator who made the decision under appeal shall likewise have the right to attend and to present evidence in support of the Fee Administrator's decision. The burden of proof in the hearing shall be on the fee payer to demonstrate to the Council by a preponderance of evidence that the amount of the impact fee, credit, reimbursement or refund was not properly calculated.

D. The criteria to be used by the Council shall be whether the decision or interpretation made by the Fee Administrator or the alternative decision or interpretation offered by the appellant, more accurately reflects the intent of this Chapter that new growth and development in the City pay its proportionate share of the costs of system improvements for Public Facilities necessary to serve new development. The Council may affirm, reject or revise the decision of the Fee Administrator, providing written findings of fact and conclusions, within fifteen (15) days after hearing the appeal. The Council shall modify the amount of the impact fee, credit,

refund or reimbursement only if there is a preponderance of the evidence in the record that the Fee Administrator erred, based upon the methodologies contained in the Impact Fee Study, this Chapter and/or capital improvements plans. The decision of the Council shall be final.

E. A fee payer may request that the City enter into mediation by a qualified independent party to address a disagreement related to the impact fee for new growth and development. If both parties agree to mediation, costs for the independent mediation service shall be shared equally by the fee payer and the City. Mediation may take place at any time during an appeals process; however, any time limitation relevant to an appeal shall be tolled until the mediation occurs.

10-8-11: ADDITIONAL PROVISIONS

A. Nothing in this Chapter shall limit or modify the rights of any person to complete any development for which a lawful building permit was issued prior to the effective date hereof.

B. Nothing in this Chapter shall prevent the City from requiring a developer to construct reasonable project improvements in conjunction with a project.

C. Nothing in this Chapter shall limit the ability of the City to enter into intergovernmental agreements as provided in Idaho Code § 67-8204A.

D. The impact fees described in this Chapter, and the administrative procedures of this Chapter shall be reviewed at least once every five (5) years to ensure that:

1. The demand and cost assumptions and other assumptions underlying such impact fees are still valid;

2. The resulting impact fees do not exceed the actual costs of providing police, fire/EMS, parks and recreation, and/or transportation system improvements required to serve new growth and development;

3. The monies collected in any impact fee fund have been and are expected to be spent for system improvements of the type for which such impact fees were paid; and

4. Such system improvements will benefit those developments for which the impact fees were paid.

E. Violation of this Chapter shall be subject to those remedies provided in this Code. Knowingly furnishing false information to any official of the City charged with the administration of this Chapter on any matter relating to the administration of this Chapter including, without limitation, the furnishing of false information regarding the expected size or use of a proposed development, shall be a violation of this Chapter and a misdemeanor.

F. Except for such impact fee as may be calculated, paid and accepted pursuant to an independent impact fee calculation study, the amount of each impact fee shall be in an amount set from time to time by Resolution of the Council based upon the definitions of Non-

residential Development and Residential Development Housing Units in this Chapter.

SECTION 2. Savings and Severability Clause. The provisions and parts of this Ordinance are intended to be severable. If any section, sentence, clause, or phrase of this Ordinance should be held to be invalid or unconstitutional by a court of competent jurisdiction, such invalidity or unconstitutionality shall not affect the validity or constitutionality of any other section, sentence, clause, or phrase of this Ordinance.

SECTION 3. Codification Clause. The Clerk is instructed to immediately forward this Ordinance to the codifier of the official municipal code for proper revision of the Code.

SECTION 4. Publication and Effective Date. This Ordinance, or a summary thereof in compliance with Idaho Code, shall be published once in the official newspaper of the City, and shall take effect not less than thirty (30) days following its passage, approval, and publication.

PASSED by the City Council and APPROVED by the Mayor of the City of Idaho Falls, Idaho, this _____ day of _____, 2022.

ATTEST: CITY OF IDAHO FALLS, IDAHO

_____ _____

KATHY HAMPTON, CITY CLERK REBECCA L. NOAH CASPER, Ph.D., MAYOR

(SEAL)

STATE OF IDAHO)

) ss:
County of Bonneville)

I, KATHY HAMPTON, CITY CLERK OF THE CITY OF IDAHO FALLS, IDAHO, DO HEREBY CERTIFY:

That the above and foregoing is a full, true and correct copy of the Ordinance entitled, "AN ORDINANCE OF THE CITY OF IDAHO FALLS, IDAHO, A MUNICIPAL CORPORATION OF THE STATE OF IDAHO; ADOPTING TITLE 10, CHAPTER 8 TO ESTABLISH A COMPREHENSIVE STRUCTURE TO ADOPT, COLLECT, AND ADMINISTER CITY DEVELOPMENT IMPACT FEES; PROVIDING SEVERABILITY, CODIFICATION, PUBLICATION BY SUMMARY, AND ESTABLISHING EFFECTIVE DATE."

_____

KATHY HAMPTON, CITY CLERK

(SEAL)